Process Equipment Catalog

Pumping Solutions for Process Industries

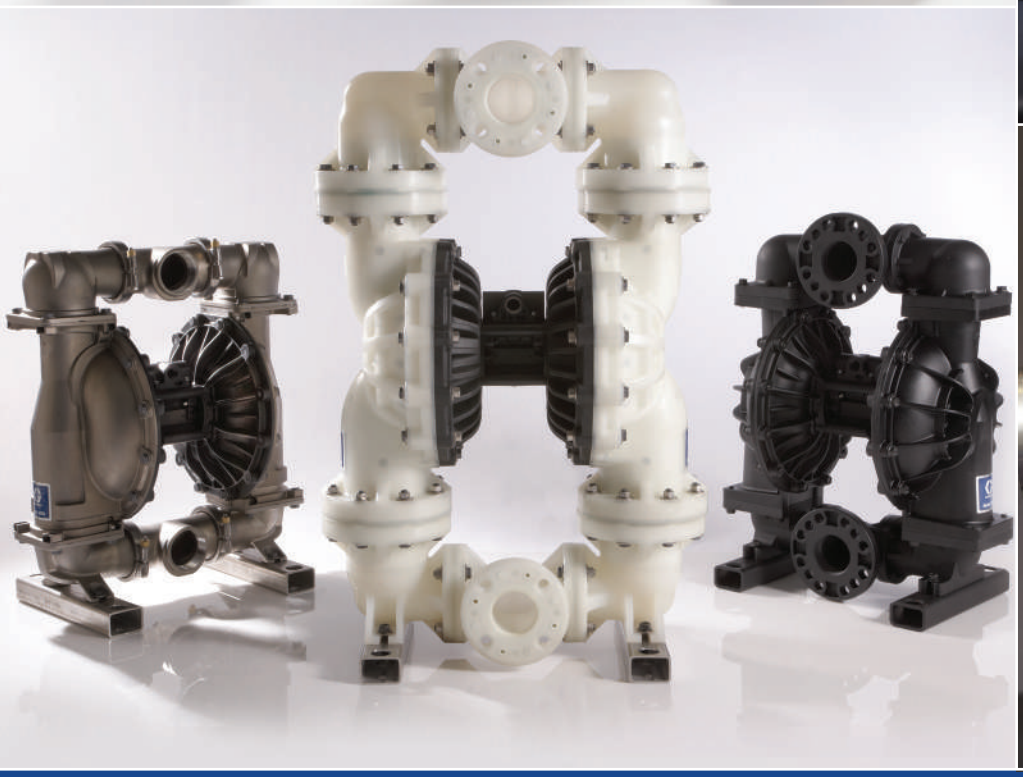

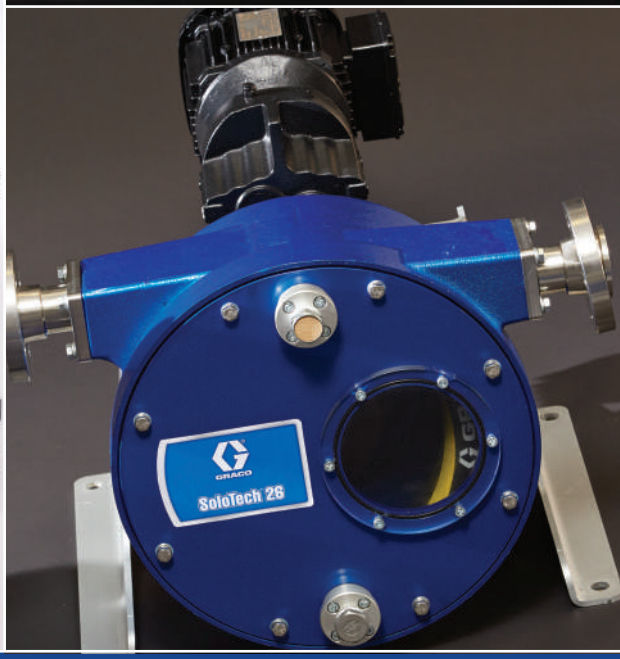

PROVEN QUALITY. LEADING TECHNOLOGY

Contents

New Products 2
Pump Model Overviews 3
Pump Selection Key for AODD Pumps 8
ChemSafe™ 205 13
ChemSafe 307 16
ChemSafe 515 19
ChemSafe 1040 22
ChemSafe 1590 25
Husky™ 205 Plastic Pumps 29
Husky 307 Plastic Pumps 31
Husky 515 Plastic Pumps 34
Husky 716 Metal Pumps 37
Husky 1050 Plastic Pumps 40
Husky 1050 Metal Pumps 43
Husky 1050HP Metal Pumps 47
Husky 1590 Plastic Pumps 51
Husky 1590 Metal Pumps 55
Husky 15120 Plastic Pumps 59
Husky 2150 Plastic Pumps 63
Husky 2150 Metal Pumps 67
Husky 2200 Plastic Pumps 71
Husky 3300 Plastic Pumps 75
Husky 3300 Metal Pumps 78
Husky Transfer Pump Packages 82
Husky Pump Accessories 86
CycleFlo™ and CycleFlo II 91
Surge Suppressors 93
Husky 1050e 94
SoloTech™ Hose Pumps 100
Hydra-Clean® 107
Fast-Flo® 1:1 111
Piston Pumps for Ink Applications 112
Notes 116

New Products

ChemSafe™
Air-Operated Double Diaphragm Pumps

ChemSafe pumps feature PTFE or UHMWPE corrosion-resistant fluid paths, which make them ideal for corrosive and abrasive chemicals. Plus they're dead-head capable and can achieve high flow rates while minimizing air consumption and operational noise.

See pages 13-27 for more information.

Husky™ 1050e
Electric Double Diaphragm Pumps

Our Husky e-Series pumps are ideal for applications that require low pulsation and a smooth flow and they're up to 5x more efficient than AODD pumps. The patented air charged drive allows for the reduction of pulsation WITHOUT expensive pulsation dampeners or surge tanks.

See pages 94-99 for more information.

SoloTech™
Peristaltic Hose Pumps

SoloTech hose pumps are designed to utilize a single oversized roller that compresses a low friction hose through a full 360 degrees of rotation. This innovative design means longer hose life when pumping caustic, abrasive or sensitive materials for metering or transfer.

See pages 100-106 for more information.

Model	ChemSafe™ 205	ChemSafe 307	ChemSafe 515	ChemSafe 1040	ChemSafe 1590
Connection Size	1/4 in (6.3 mm)	3/8 in (9.4 mm)	1/2 in (12.7 mm)	1 in (25.4 mm)	1.5 in (38.1 mm)
Thread Type	NPT or BSPT	NPT or BSPT	NPT or BSPT	NPT or BSPT	NPT or BSPT
Air Valve	Standard	Standard	Standard	Standard	Standard
Maximum Flow Rate	3.7 gpm (14 lpm)	6.7 gpm (25 lpm)	16 gpm (61 lpm)	39 gpm (156 lpm)	100 gpm (376 lpm)
Maximum Discharge Pressure	100 psi (7 bar, 0.7 MPa)	100 psi (7 bar, 0.7 MPa)	100 psi (7 bar, 0.7 MPa)	100 psi (7 bar, 0.7 MPa)	100 psi (7 bar, 0.7 MPa)
Materials of Construction Available	PTFE, UHMWPE	PTFE, UHMWPE	PTFE, UHMWPE	PTFE, UHMWPE	PTFE, UHMWPE
Center Section Available	Polypropylene	Polypropylene	Polypropylene	Polypropylene	Polypropylene
Pump Weight	4.1 lb (1.9 kg) PTFE	6.8 lb (3.1 kg) PTFE	20 lb (9.1 kg) PTFE	40 lb (18 kg) PTFE	95.2 lb (43.2 kg) PTFE
	4 lb (1.8 kg) UHMWPE	6 lb (2.7 kg) UHMWPE	13.7 lb (6.2 kg) UHMWPE	26.4 lb (12 kg) UHMWPE	66 lb (30 kg) UHMWPE
Maximum Solids	0.06 in (1.5 mm)	0.08 in (2.0 mm)	0.16 in (4.1 mm)	0.24 in (6.1 mm)	0.32 in (8.1 mm)

Model Overview
Husky Electric Double Diaphragm Pumps

Model	Husky 1050e	Husky 1050e	Husky 1050e
Material of Construction	Aluminum	Polypropylene	Stainless Steel
Connection Size	1 in (25.4 mm)	1 in (25.4 mm)	1 in (25.4 mm)
Thread Type	NPT or BSPT	NPT or BSPT	NPT or BSPT
Motor	AC or BLDC	AC or BLDC	AC or BLDC
Power	110V, 22V, or 480V Single or Three Phase	110V, 22V, or 480V Single or Three Phase	110V, 22V, or 480V Single or Three Phase
Maximum Flow Rate	39 gpm (148 lpm)	39 gpm (148 lpm)	39 gpm (148 lpm)
Maximum Discharge Pressure	70 psi (4.8 bar, .48 Mpa)	70 psi (4.8 bar, .48 Mpa)	70 psi (4.8 bar, .48 Mpa)
Center Section Available	Aluminum	Aluminum or Stainless Steel	Aluminum or Stainless Steel
Pump Weight AC Motor Models BLDC Motor Models	 106 lb (48 kg) 90 lb (41 kg)	 121.5 lb (55 kg) 105.5 lb (48 kg)	 103.5 lb (47 kg 87.5 lb (40 kg)
Maximum Solids	1/8 in (3.2 mm)	1/8 in (3.2 mm)	1/8 in (3.2 mm)
Operation manual	344188	344188	344188

Model	SoloTech 10	SoloTech 23	SoloTech 26	SoloTech 30
Material of Construction (Housing)	Aluminum	Aluminum	Aluminum	Aluminum
Hose Material	Natural Rubber, CSM, Nitril, EPDM	Natural Rubber, CSM, Nitril, EPDM	Natural Rubber, CSM, Nitril, EPDM	Natural Rubber, CSM, Nitril, EPDM
Barb Material	Stainless Steel, PVDF, Hastelloy	Stainless Steel, PVDF, Hastel-loy	Stainless Steel, PVDF, Hastel-loy	Stainless Steel, PVDF, Hastelloy
Connection Type and Size	DIN PN16 010 - 3/8 in, ANSI 150 1/2 NPS, JIS 10K 10	DIN PN16 025 - 1 in, ANSI 150 1-1/4 NPS, JIS 10K 025	DIN PN16 025 - 1 in, ANSI 150 1-1/4 NPS, JIS 10K 025	DIN PN16 025 - 1-1/4 in, ANSI 150 1-1/2 NPS, JIS 10K 032
Motor	AC or BLDC	AC or BLDC	AC or BLDC	AC or BLDC
Power	110V, 22V, or 480V Single or Three Phase	110V, 22V, or 480V Single or Three Phase	110V, 22V, or 480V Single or Three Phase	110V, 22V, or 480V Single or Three Phase
Maximum Flow Rate*	0.685 gpm (148 lpm)	4.75 gpm (17.98 lpm)	10.18 gpm (38.54 lpm)	16.0 gpm (60.57 lpm)
Minimum Flow Rate* AC Motor Models BLDC Motor Models	 0.01 gpm (.038 lpm) 0.026 gph (.01 lph)	 0.1 gpm (.379 lpm) 0.026 gph (.01 lph)	 0.2 gpm (.757 lpm) 0.026 gph (.01 lph)	 0.4 gpm (1.51 lpm) 0.026 gph (.01 lph)
Maximum Discharge Pressure	125 psi (8.6 bar, .86 MPa)	125 psi (8.6 bar, .86 MPa)	125 psi (8.6 bar, .86 MPa)	125 psi (8.6 bar, .86 MPa)
Pump Weight AC Motor Models BLDC Motor Models	 65 lb (29 kg) 55 lb (25 kg)	 120 lb (54 kg) 100 lb (45 kg)	 215 lb (98 kg) 190 lb (86 kg)	 285 lb (129 kg) 235 lb (107 kg)
Maximum Solids	.201 in (5 mm)	.672 in (17.1 mm)	.798 in (20.3 mm)	.965 in (24.5 mm)
Operation Manual	334859	334859	334859	334859
Repair Parts Manual	3A3367	3A3367	3A3367	3A3367

Model Overview
Husky Air-Operated Double Diaphragm Pumps

Model	Husky™ 205 Plastic	Husky 307 Plastic	Husky 515 Plastic	Husky 716 Metal	Husky 1050 Plastic	Husky 1050 Metal	Husky 1050HP
Connection Size	1/4 in (6.3 mm)	3/8 in (9.4 mm)	1/2 in (12.7 mm)	3/4 in (19.1 mm)	1 in (25.4 mm)	1 in (25.4 mm)	1 in (25.4 mm)
Thread Type	NPT or BSPT	NPT or BSPT	NPT or BSPT	NPT or BSPT	ANSI/DIN Flange	NPT or BSPT	NPT or BSPT
Air Valve	Standard and Remote	Standard	Standard and Remote	Standard and Remote	Standard, Smart and Remote	Standard, Smart and Remote	Standard
Maximum Flow Rate	5 gpm (19 lpm)	7 gpm (26 lpm)	15 gpm (57 lpm)	16 gpm (61 lpm)	50 gpm (189 lpm)	50 gpm (189 lpm)	50 gpm (189 lpm)
Maximum Discharge Pressure	100 psi (7 bar, 0.7 MPa)	100 psi (7 bar, 0.7 MPa)	100 psi (7 bar, 0.7 MPa)	100 psi (7 bar, 0.7 MPa)	125 psi (8.6 bar. 0.9 MPa)	125 psi (8.6 bar, 0.9 MPa)	250 psi (17.2 bar, 1.7 MPa)
Materials of Construction Available	Polypropylene, PVDF, Acetal	Polypropylene, Acetal	Polypropylene, PVDF, Acetal	Aluminum, 316 SST	Polypropylene, Conductive Poly, PVDF	Aluminum, 316 SST, Hastelloy	Aluminum, 316 SST
Center Section Available	Polypropylene	Polypropylene	Polypropylene	Polypropylene	Polypropylene, Conductive Poly	Coated Aluminum, Polypropylene, Conductive Poly	Aluminum
Pump Weight	2.0 lb (0.9 kg) Polypropylene	4.75 lb (2.2 kg) Polypropylene	6.5 lb (2.9 kg) Polypropylene	8.5 lb (3.9 kg) Aluminum	18 lb (8.2 kg) Polypropylene	23 lb (10.4 kg) Aluminum	48 lb (21.8 kg) Aluminum
	2.5 lb (1.1 kg) Acetal	5.2 lb (2.4 kg) Acetal	7.8 lb (3.5 kg) Acetal	18 lb (8.2 kg) SST	26 lb (11.8 kg) PVDF	36.3 - 41 lb (16.5-18.6 kg) SST	60 lb (27.2 kg) SST
	2.8 lb (1.3 kg) PVDF		8.5 lb (3.9 kg) PVDF			41 lb (18.6 kg) Hastelloy	
Maximum Solids	0.06 in (1.5 mm)	0.063 in (1.6 mm)	0.094 in (2.5 mm)	0.094 in (2.5 mm)	0.125 in (3.2 mm)	0.125 in (3.2 mm)	0.125 in (3.2 mm)
Viscosity	Up to 500 cps	Up to 1,000 cps	Up to 5,000 cps	Up to 5,000 cps	Up to 10,000 cps	Up to 10,000 cps	Up to 10,000 cps

Husky 1590 Plastic	Husky 1590 Metal	Husky 15120 Plastic	Husky 2150 Plastic	Husky 2150 Metal	Husky 2200 Plastic	Husky 3300 Plastic	Husky 3300 Metal
1-1/2 in (38.1 mm)	1-1/2 in (38.1 mm)	1-1/2 in (38.1 mm)	2 in (50.8 mm)	2 in (50.8 mm)	2 in (50.8 mm)	3 in (76.2 mm)	3 in (76.2 mm)
ANSI Flange	NPT or BSPT	DIN/ANSI	ANSI Flange	NPT or BSPT	DIN/ANSI	DIN/ANSI	NPT and BSPT DIN/ANSI (AL only)
Standard and Remote	Standard and Remote	Standard	Standard and Remote	Standard and Remote	Standard	Standard	Standard
100 gpm (379 lpm)	100 gpm (379 lpm)	120 gpm (454 lpm)	150 gpm (568 lpm)	150 gpm (568 lpm)	200 gpm (757 lpm)	280 gpm (1,059 lpm)**	300 gpm (1,135 lpm)**
120 psi (8.3 bar, 0.8 MPa)	120 psi (8.3 bar, 0.8 MPa)	125 psi (8.6 bar, 0.9 MPa)	120 psi (8.3 bar, 0.8 MPa)	120 psi (8.3 bar, 0.8 MPa)	125 psi (8.6 bar, 0.9 MPa)	100 psi (7 bar, 0.7 MPa)	125 psi (8.6 bar, 0.9 MPa) with AL center
Polypropylene, PVDF	Aluminum, 316 SST	Polypropylene, PVDF	Polypropylene, PVDF	Aluminum, 316 SST, Ductile Iron	Polypropylene, PVDF	Polypropylene	Aluminum, 316 SST
Coated Aluminum, 316 SST	Coated Aluminum, 316 SST	Polypropylene	Coated Aluminum, 316 SST	Coated Aluminum, 316 SST	Polypropylene	Polypropylene	Aluminum, Polypropylene* (*SST pump only)
35 lb (16 kg) Polypropylene	33.5 lb (15.2 kg) Aluminum	57 lb (25.9 kg) Polypropylene	49 lb (22 kg) Polypropylene	58 lb (26.3 kg) Aluminum	80 lb (36.3 kg) Polypropylene	200 lb (90.7 kg) Polypropylene	150 lb (68 kg) Aluminum
49 lb (22 kg) PVDF	86 lb (40 kg) SST	74 lb (33.6 kg) PVDF	68 lb (31 kg) PVDF	111 lb (50.3 kg) SST	106 lb (48.1 kg) PVDF		255 lb (115.6 kg) SST
				130 lb (59 kg) Ductile Iron			
0.188 in (4.8 mm)	0.188 in (4.8 mm)	0.25 in (6.3 mm)	0.25 in (6.3 mm)	0.25 in (6.3 mm)	0.375 in (9.5 mm)	0.5 in (12.7 mm)	0.5 in (12.7 mm)
Up to 15,000 cps	Up to 15,000 cps	Up to 15,000 cps	Up to 20,000 cps	Up to 20,000 cps	Up to 20,000 cps	Up to 20,000 cps	Up to 20,000 cps

**Maximum flow rate using standard diaphragm at 125 psi (8.6 bar).

Pump Selection Key
Husky Air-Operated Double Diaphragm Pumps

Diaphragm Pump Designation Key

For Husky 205, 307, 515, 716, 1590 and 2150 Pumps

Part numbers are located on ID tag on center section of all Husky diaphragm pumps.

D	X	X	X	X	X
Diaphragm Pump	Pump Size	Wetted Parts	Seats	Balls/ Checks	Diaphragms

PUMP SIZE (AIR MOTOR TYPE AND MATERIAL)	WETTED PARTS	SEATS	BALLS/CHECKS	DIAPHRAGM
1 = 1/4" (6.35 mm) Standard: Polypropylene center section 2 = 1/4" (6.35 mm) Remote: Polypropylene center section 3 = 3/8" (9.52 mm) Standard: Polypropylene center section 5 = 1/2" (12.7 mm) Standard: Polypropylene center section 4 = 1/2" (12.7 mm) Remote: Polypropylene center section 5 = 3/4" (19.05 mm) Standard: Polypropylene center section 4 = 3/4" (19.05 mm) Remote: Polypropylene center section B = 1-1/2" (38.1 mm) Standard: aluminum center section C = 1-1/2" (38.1 mm) Remote: aluminum center section T = 1-1/2" (38.1 mm) Standard: stainless steel center section U = 1-1/2" (38.1 mm) Remote: stainless steel center section F = 2" (50.8 mm) Standard: aluminum center section G = 2" (50.8 mm) Remote: aluminum center section V = 2" (50.8 mm) Standard: stainless steel center section	1 = Acetal (npt) 2 = Polypropylene (npt) 3 = Aluminum (npt) 4 = Stainless Steel (npt) 5 = PVDF (npt) 6 = Ductile Iron (npt) A = Acetal * (bsp) B = Polypropylene * (bsp) C = Aluminum (bsp) D = Stainless Steel (bsp) E = PVDF (bsp) F = Ductile Iron (bsp) G = 2 bsp Alum Extended H = 2 npt Alum Extended	2 = Acetal 3 = Stainless Steel 4 = Hardened SST 5 = TPE 6 = Santoprene 7 = Buna-N 8 = Fluoroelastomer 9 = Polypropylene A = PVDF B = SST with FKM seal C = Santoprene with FKM seal G = Geolast	1 = PTFE 2 = Acetal 3 = Stainless Steel 4 = Hardened SST 5 = TPE 6 = Santoprene 7 = Buna-N 8 = Fluoroelastomer 9 = Polypropylene A = PVDF G = Geolast	1 = PTFE 5 = TPE 6 = Santoprene 7 = Buna-N 8 = Fluoroelastomer G = Geolast

** = BSP plastic in 1/2" (12.7mm) pumps*
≥1" Plastic pumps flange connections
Note: Above matrix is possible combinations. All combination may not be available. See specific pump listings for available combinations.

Diaphragm Pump Kit Designation Key

When selecting a kit, use the same code numbers as for the pumps regarding pump size, seat, ball/checks and diaphragm.

D	O	X	X	X	X
Diaphragm Pump	Kit	Pump Size	Seats	Balls/ Checks	Diaphragms

PUMP SIZE	SEATS	BALLS/CHECKS	DIAPHRAGM
1 = 1/4 in (6.35 mm) 3 = 3/8 in (9.52 mm) 5 = 1/2 in (12.7 mm) and 3/4 in (19.05 mm) B = 1-1/2 in (38.1 mm) metal pump C = 1-1/2 in (38.1 mm) plastic pump F = 2 in (50.8 mm) metal pump G= 2 in (50.8 mm) plastic pump	0 = No seat 2 = Acetal 3 = Stainless Steel 4 = Hardened SST 5 = TPE 6 = Santoprene 7 = Buna-N 8 = Fluoroelastomer 9 = Polypropylene A = PVDF B = SST with FKM seal C = Santoprene with FKM seal G = Geolast	1 = PTFE 2 = Acetal 3 = Stainless Steel 4 = Hardened SST 5 = TPE 6 = Santoprene 7 = Buna-N 8 = Fluoroelastomer 9 = Polypropylene A = PVDF G = Geolast 0 = No Balls/Checks	1 = PTFE 5 = TPE 6 = Santoprene 7 = Buna-N 8 = Fluoroelastomer G = Geolast 0 = No Diaphragm

Air-Operated Pump Selector Tool

For Husky, ChemSafe, Piston, and Sanitary Pumps

Find the Right Pump for your Application

To order a Husky or ChemSafe pump, use the online selector tool at **www.graco.com/pumpselectors** or contact your distributor.

From the homepage at www.graco.com/pumpselectors, click on selector for desired pump.

Example of Product Selector Tool on www.graco.com/pumpselectors.

Maximum Diaphragm Operating Temperature

NOTICE:

Temperature limits are based on mechanical stress only. Certain chemicals will further limit the fluid temperature range. Stay within the temperature range of the most-restricted wetted component. Operating at a fluid temperature that is too high or too low for the components of your pump may cause equipment damage.

Acetal Pumps

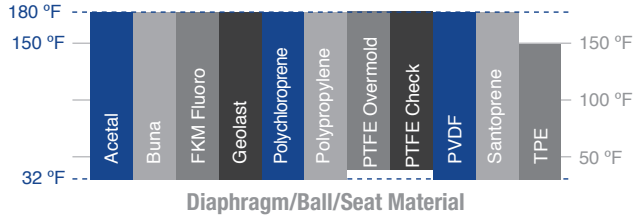

Polypropylene or Conductive Poly Pumps

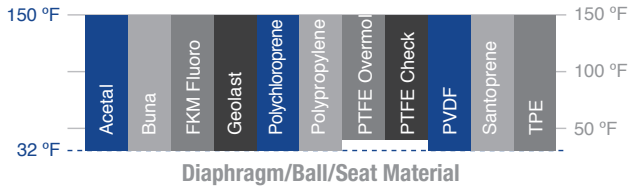

Aluminum, Hastelloy, or Stainless Steel Pumps

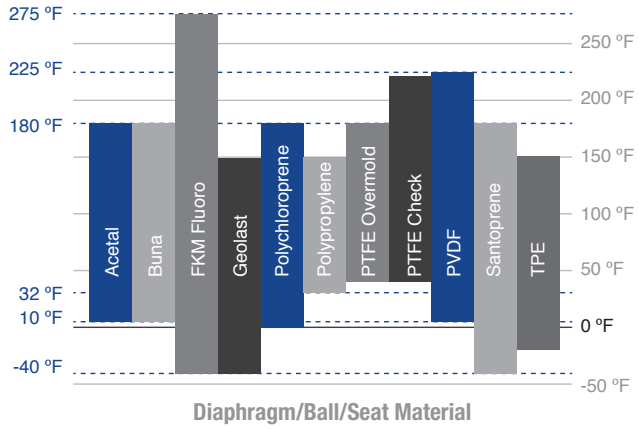

PVDF Pumps

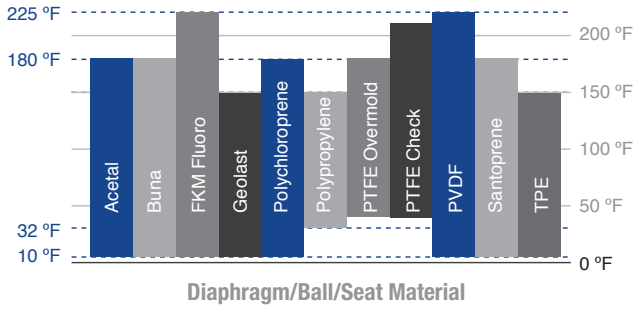

The maximum temperature listed is based on the ATEX standard for T4 temperature classification. If you are operating in a non-explosive environment, FKM fluoroelastomer's maximum fluid temperature in aluminum or stainless steel pumps is 320°F (160°C).
Actual pump performance may be affected by prolonged usage at temperature.

Pump Selection Key

Fluid Section Materials

Aluminum

Medium corrosion and abrasion resistance.
Not for use with halogenated hydrocarbons.

Polypropylene

Wide chemical compatibility.
General purpose.

Conductive Polypropylene

Wide chemical compatibility.
General purpose. Groundable.

Stainless Steel (316 Grade)

High level of corrosion and abrasion resistance.

Acetal

Wide range of solvent resistance.
Withstands extreme fatigue. Good level of abrasion resistance. Groundable for use with flammables.
Not for use with acids or bases.

Ductile Iron

High abrasion resistance.

Hastelloy

Good resistance to aggressive chemicals
in corrosive environments. Compatible with
high temperature fluids.

PVDF

Strong chemical resistance to acids and bases.
Good abrasion resistance. High temperature resistance.

PTFE

Ideal for corrosive or toxic liquids.
High temperature resistance and low coefficient of friction.

UHMWPE

Best option for abrasion resistance.
High level of chemical resistance.

Fluid section materials vary depending on pump model

Diaphragm Materials

Diaphragm Material*	Description
PTFE/EPDM Two Piece	Widest chemical compatibility, extreme corrosion resistance, very low frictional coefficient, non-adhesive, high heat resistance.
PTFE/EPDM Overmolded	Same as above. **Overmolded design improves wear, durability and cleanability.** Longer life than above.
Thermoplastic Polyester Elastomer (TPE)	Good low temp properties. Good abrasion resistance. Often substituted for Buna.
Santoprene	Good abrasion and chemical resistance. OK for use with some solvents (e. g. MEK, Acetone), caustic solutions, dilute acids, and alcohols. Often substituted for EPDM or EPR.
Buna-N	Good for petroleum-based fluids, water, oils, hydrocarbons and MILD chemicals (e.g. mineral spirits).
Fluoroelastomer (FKM)	High heat resistance. Good resistance to aggressive chemicals including acids and some solvents (e.g. xylene and mineral spirits). Good resistance to steam as well as animal, vegetable, and petroleum oils. Resists unleaded fuels.
Geolast	Good abrasion resistance. Approximately same chemical compatibility as Buna.
Polychloroprene Overmolded (CR)	High resilience. Good with whiskey, wine, beer and natural gas. One source calls an "all purpose Polymer ". About 30% higher abrasion resistance than Buna.
EPDM, used with 3A pump (Ethylene Propylene Diene M-class rubber)	High heat resistance. Good resistance to gas permeability and to steam. OK with caustic solutions, dilute acids, ketones and alcohols. Recommended for use with CIP Sanitizing Agent OXONIA.
EPDM Overmolded	Slurries with chemical mixtures.
Buna-N Overmolded	Oils and nonaggressive chemical slurries.

*Available materials of construction varies depending on pump model

Pump Selection Key

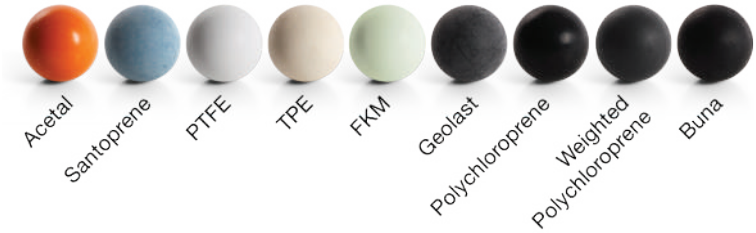

Ball Check Materials

Ball Check Material	Description
Thermoplastic Polyester Elastomer (TPE)	Good low temperature properties. Good abrasion resistance.
Stainless Steel	High level of corrosion and abrasion resistance. Passivated 316 grade.
Santoprene	Good abrasion and chemical resistance. OK for use with some solvents, (e.g. MEK, acetone) caustic solutions, dilute acids and alcohols. Often substituted for EPDM or EPR.
Geolast	Good abrasion resistance. Approximately same chemical compatibility as Buna.
Buna-N	Good for petroleum-based fluids, water, oils, hydrocarbons and MILD chemicals (e.g. mineral spirits). Not for use with strong solvents or chemicals (e.g. acetone, MEK, ozone, chrlorinated hydrocarbons and nitro hydrocarbons).
Fluoroelastomer (FKM)	High heat resistance. Good resistance to aggressive chemicals including acids and some solvents (e.g. Xylene and mineral spirits). Good resistance to steam as well as animal, vegetable and petroleum oils. Resists unleaded fuels. Not for use with ketones, low molecular weight ester and nitro containing compounds.
PTFE	Widest chemical compatibility, extreme corrosion resistance, very low frictional coefficient, non-adhesive, high heat resistance. Poor abrasion resistance.
Polychloroprene (CR)	High resilience. Good with whiskey, wine, beer and natural gas. Good with animal and vegetable oil, moderate chemicals, fats and greases. Not for use with strong oxidizing acids, esters, ketones, chlorinated aromatic and nitro hydrocarbons.
Polychloroprene (CR) Weighted	High resilience. Good with whiskey, wine, beer and natural gas. Good with animal and vegetable oil, moderate chemicals, fats and greases. Not for use with strong oxidizing acids, esters, ketones, chlorinated aromatic and nitro hydrocarbons.
Acetal	Wide range of solvent resistant and withstands extreme fatigue. Good level of abrasion resistance. Not for use with acids or bases.

Seat Materials

Seat Material	Description
Polypropylene	Wide chemical compatibility. General purpose.
Thermoplastic Polyester Elastomer (TPE)	Good low temp properties. Good abrasion resistance.
Stainless Steel	High level of corrosion and abrasion resistance. Passivated 316 grade.
Santoprene	Good abrasion and chemical resistance. OK for use with some solvents, (e.g. MEK, acetone) caustic solutions, dilute acids, and alcohols. Often substituted for EPDM or EPR.
Geolast	Good abrasion resistance. Approximately same chemical compatibility as Buna.
Buna-N	Good for petroleum-based fluids, water, oils, hydrocarbons and MILD chemicals (e.g. mineral spirits). Not for use with strong solvents or chemicals (e. g. acetone, MEK, ozone, chrlorinated hydrocarbons, and nitro hydrocarbons).
Fluoroelastomer (FKM)	High heat resistance. Good resistance to aggressive chemicals including acids and some solvents (e. g. Xylene and mineral spirits). Good resistance to steam as well as animal, vegetable and petroleum oils. Resists unleaded fuels. Not for use with ketones, low molecular weight ester and nitro containing compounds.
Aluminum	Medium corrosion and abrasion resistance. Not for use with halogenated hydrocarbons.
Acetal	Wide range of solvent resistant and withstands extreme fatigue. Good level of abrasion resistance. Not for use with acids or bases.
PVDF	Strong chemical resistance: Acids and bases. Good abrasion resistance. High temperature resistance.
PTFE	Ideal for corrosive or toxic liquids. High temperature resistance.
UHMWPE	Best option for adrasion resistance. High level of chemical resistance.

Selector Tool

To order a ChemSafe 205, use the online selector tool at **www.graco.com/pumpselectors** or contact your distributor.

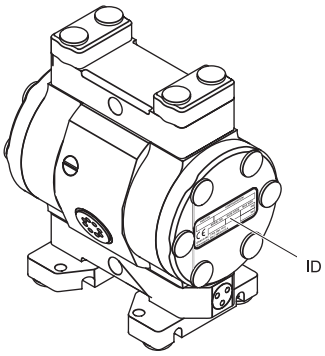

NOTE: Check the identification plate (ID) for the Configuration Number of your pump. Use the following matrix to define the components of your pump.

Example of Product Selector Tool on www.graco.com/pumpselectors.

Pump Configuration Options

Pump Model (1/4 inch port, 3.6 gpm)	Center Section and Air Valve Material		Fluid Covers and Manifolds		Seat Material		Ball Material	
205PT 1/4 in PTFE	**P01A**	Polypropylene center with npt air inlet	**PT3**	PTFE, NPT	**PT**	PTFE	**PT**	PTFE
205UH 1/4 in UHMWPE			**PT4**	PTFE, BSPT	UM	UHMWPE		
			UH3	UHMWPE, NPT				
	P03A	Polypropylene center with bspt air inlet	**UH4**	UHMWPE, BSPT				

Diaphragm Material		Manifold and Seat Seal Material	
BN	Buna-N Overmolded*	**PT**	PTFE
EP	EPDM Overmolded*		
PO	PTFE Overmolded		

**Only available on 205UH*

ChemSafe 205 Plastic Pumps

Popular Models

Part Number	Model	Fluid Path	Seat	Ball	Port	Diaphragm
24X430	ChemSafe 205	PTFE	PTFE	PTFE	BSPT	Overmolded PTFE
24X429	ChemSafe 205	PTFE	PTFE	PTFE	NPT	Overmolded PTFE
24X532	ChemSafe 205	UHMWPE	UHMWPE	PTFE	BSPT	Overmolded EPDM
24X533	ChemSafe 205	UHMWPE	UHMWPE	PTFE	NPT	Overmolded EPDM
24X508	ChemSafe 205	UHMWPE	UHMWPE	PTFE	BSPT	Overmolded Buna-N
24X507	ChemSafe 205	UHMWPE	UHMWPE	PTFE	NPT	Overmolded Buna-N
24X511	ChemSafe 205	UHMWPE	UHMWPE	PTFE	BSPT	Overmolded PTFE
24X509	ChemSafe 205	UHMWPE	UHMWPE	PTFE	NPT	Overmolded PTFE

Technical Specifications

ChemSafe 205	Polypropylene
Max Flow Rate*	3.7 gpm (14 lpm)
Displacement Per Cycle	0.008 gal (0.03 l)
Connection Sizes/Types	1/4" NPT, 1/4" BSPT
Max. Pumpable Solids	0.06 in (1.5 mm)
Suction Lift Dry*	6.5 ft (2.0 m)
Suction Lift Wet*	31 ft (9.5 m)
Weight (PTFE)	4.1 lb (1.9 kg)
Weight (UHMWPE)	4 lb (1.8 kg)
Max Air/Fluid Temperature	PTFE 212°F (100°C) UHMWPE 158°F (70°C)
Min/Max Air Pressure	30 psi (2 bar) minimum startup air pressure 100 psi (7 bar) maximum supply air pressure
Max. Sound Pressure	70.6 dB(a)
Max. Sound Power	64.2 dB(a)
Instruction Manual	334792

**May vary depending on materials*

Performance Charts

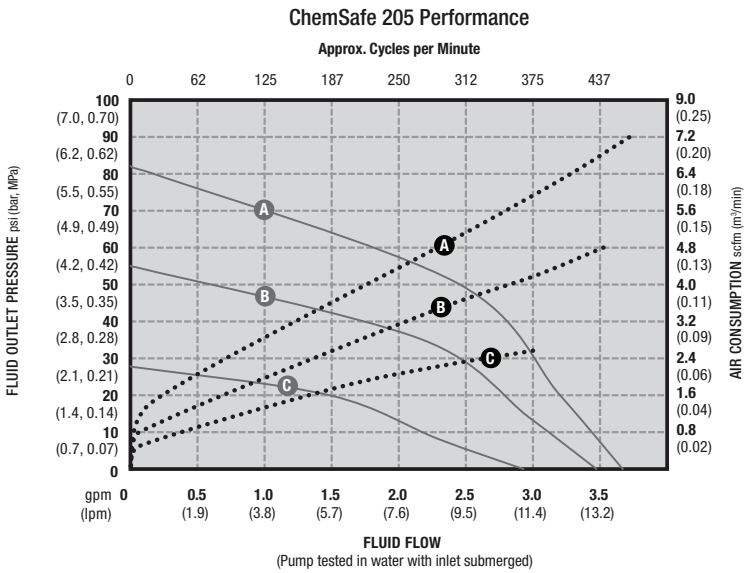

AIR PRESSURE	LEGEND
(A) = at 100 psi (7 bar, 0.7 MPa)	Air Consumption • • • • • •
(B) = at 70 psi (4.8 bar, 0.48 MPa)	Fluid Pressure ———
(C) = at 40 psi (2.8 bar, 0.28 MPa)	

Dimensions

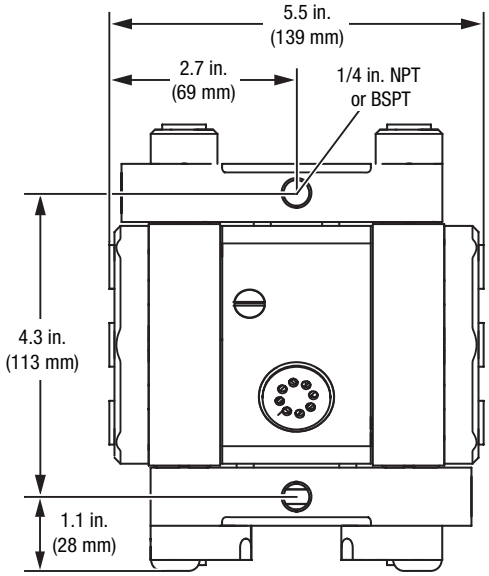

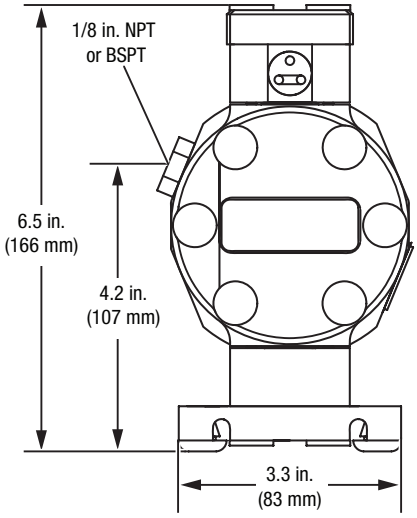

Mounting Pattern

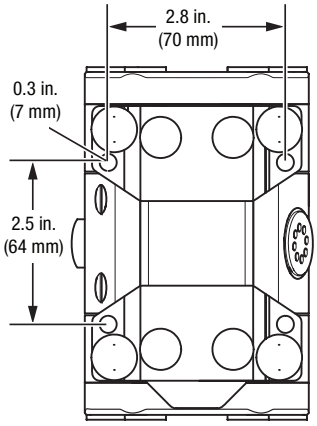

ChemSafe 307 Plastic Pump
Air-Operated Double Diaphragm

Selector Tool

To order a ChemSafe 307, use the online selector tool at **www.graco.com/pumpselectors** or contact your distributor.

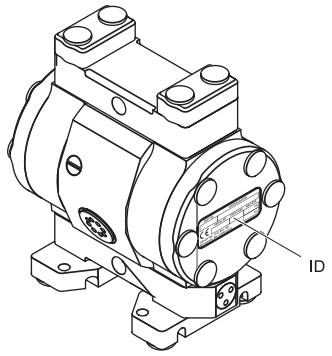

NOTE: Check the identification plate (ID) for the Configuration Number of your pump. Use the following matrix to define the components of your pump.

Example of Product Selector Tool on www.graco.com/pumpselectors.

Pump Configuration Options

Pump Model (3/8 inch port, 7.9 gpm)	Center Section and Air Valve Material		Fluid Covers and Manifolds		Seat Material		Ball Material	
307PT 3/8 in PTFE	**P01A**	Polypropylene center with npt air inlet	**PT3**	PTFE, NPT	**PT**	PTFE	**PT**	PTFE
307UH 3/8 in UHMWPE			**PT4**	PTFE, BSPT	UH	UHMWPE		
			UH3	UHMWPE, NPT				
	P03A	Polypropylene center with bspt air inlet	**UH4**	UHMWPE, BSPT				

Diaphragm Material		Manifold and Seat Seal Material	
BN	Buna-N Overmolded*	**PT**	PTFE
EP	EPDM Overmolded*		
PO	PTFE Overmolded		

**Only available on 307UH*

Popular Models

Part Number	Model	Fluid Path	Seat	Ball	Port	Diaphragm
24X428	ChemSafe 307	PTFE	PTFE	PTFE	BSPT	Overmolded PTFE
24X427	ChemSafe 307	PTFE	PTFE	PTFE	NPT	Overmolded PTFE
24X536	ChemSafe 307	UHMWPE	UHMWPE	PTFE	BSPT	Overmolded EPDM
24X537	ChemSafe 307	UHMWPE	UHMWPE	PTFE	NPT	Overmolded EPDM
24X502	ChemSafe 307	UHMWPE	UHMWPE	PTFE	BSPT	Overmolded Buna-N
24X501	ChemSafe 307	UHMWPE	UHMWPE	PTFE	NPT	Overmolded Buna-N
24X504	ChemSafe 307	UHMWPE	UHMWPE	PTFE	BSPT	Overmolded PTFE
24X503	ChemSafe 307	UHMWPE	UHMWPE	PTFE	NPT	Overmolded PTFE

Technical Specifications

ChemSafe 307	Polypropylene
Max Flow Rate*	6.7 gpm (25 lpm)
Displacement Per Cycle	0.019 gal (0.07 l)
Connection Sizes/Types	3/8" NPT, 3/8" BSPT
Max. Pumpable Solids	0.08 in (2.0 mm)
Suction Lift Dry*	10 ft (3.0 m)
Suction Lift Wet*	31 ft (9.5 m)
Weight (PTFE)	6.8 lb (3.1 kg)
Weight (UHMWPE)	6 lb (2.7 kg)
Max Air/Fluid Temperature	PTFE 212°F (100°C) UHMWPE 158°F (70°C)
Min/Max Air Pressure	30 psi (2 bar) minimum startup air pressure 100 psi (7 bar) maximum supply air pressure
Max. Sound Pressure	66.1 dB(a)
Max. Sound Power	58.1 dB(a)
Instruction Manual	334793

**May vary depending on materials*

ChemSafe 307 Plastic Pumps

Performance Charts

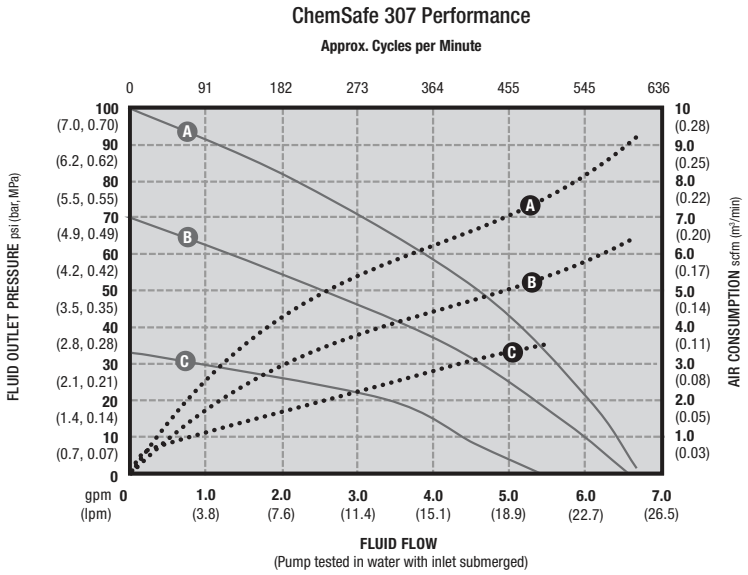

AIR PRESSURE	LEGEND
(A) = at 100 psi (7 bar, 0.7 MPa)	Air Consumption • • • • • •
(B) = at 70 psi (4.8 bar, 0.48 MPa)	Fluid Pressure ———
(C) = at 40 psi (2.8 bar, 0.28 MPa)	

Dimensions

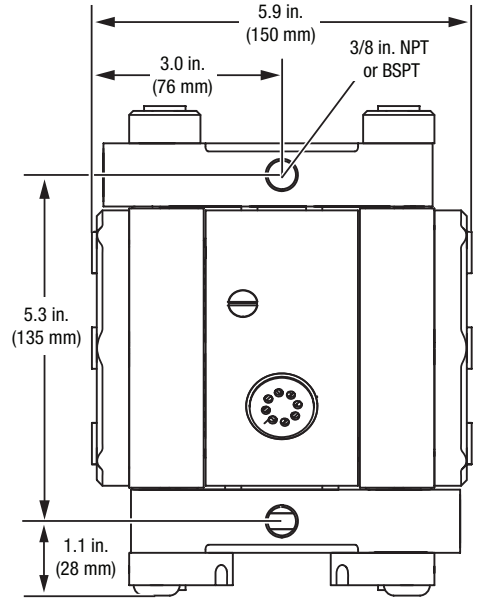

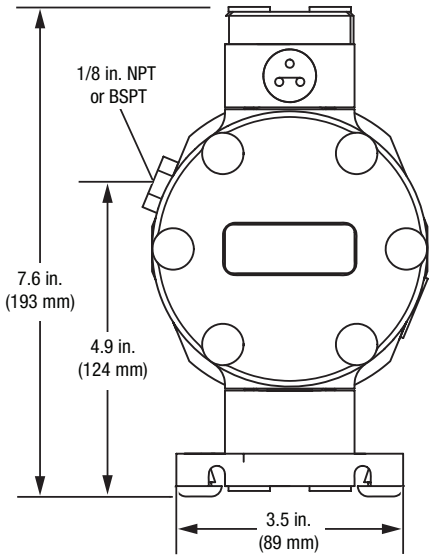

Mounting Pattern

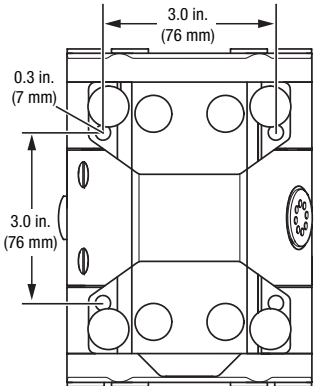

Selector Tool

To order a ChemSafe 515, use the online selector tool at **www.graco.com/pumpselectors** or contact your distributor.

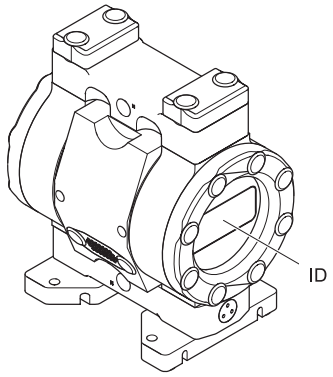

NOTE: Check the identification plate (ID) for the Configuration Number of your pump. Use the following matrix to define the components of your pump.

Example of Product Selector Tool on www.graco.com/pumpselectors.

Pump Configuration Options

Pump Model (1/2 inch port, 16.6 gpm)	Center Section and Air Valve Material		Fluid Covers and Manifolds		Seat Material		Ball Material	
515PT 1/2 in PTFE **515UH** 1/2 in UHMWPE	**P01A**	Polypropylene center with npt air inlet	**PT3**	PTFE, NPT	**PT**	PTFE	**PT**	PTFE
			PT4	PTFE, BSPT	**UH**	UHMWPE		
			UH3	UHMWPE, NPT				
	P03A	Polypropylene center with bspt air inlet	**UH4**	UHMWPE, BSPT				

Diaphragm Material		Manifold and Seat Seal Material	
BN	Buna-N Overmolded*	**PT**	PTFE
EP	EPDM Overmolded*		
PO	PTFE Overmolded		

**Only available on 515UH*

ChemSafe 515 Plastic Pump

Popular Models

Part Number	Model	Fluid Path	Seat	Ball	Port	Diaphragm
24X426	ChemSafe 515	PTFE	PTFE	PTFE	BSPT	Overmolded PTFE
24X425	ChemSafe 515	PTFE	PTFE	PTFE	NPT	Overmolded PTFE
24X540	ChemSafe 515	UHMWPE	UHMWPE	PTFE	BSPT	Overmolded EPDM
24X541	ChemSafe 515	UHMWPE	UHMWPE	PTFE	NPT	Overmolded EPDM
24X496	ChemSafe 515	UHMWPE	UHMWPE	PTFE	BSPT	Overmolded Buna-N
24X495	ChemSafe 515	UHMWPE	UHMWPE	PTFE	NPT	Overmolded Buna-N
24X498	ChemSafe 515	UHMWPE	UHMWPE	PTFE	BSPT	Overmolded PTFE
24X497	ChemSafe 515	UHMWPE	UHMWPE	PTFE	NPT	Overmolded PTFE

Technical Specifications

ChemSafe 515	Polypropylene
Max Flow Rate*	16 gpm (60.6 lpm)
Displacement Per Cycle	0.042 gal (0.16 l)
Connection Sizes/Types	1/2" NPT, 1/2" BSPT
Max. Pumpable Solids	0.16 in (4.1 mm)
Suction Lift Dry*	11 ft (3.3 m)
Suction Lift Wet*	31 ft (9.5 m)
Weight (PTFE)	20 lb (9.1 kg)
Weight (UHMWPE)	13.7 lb (6.2 kg)
Max Air/Fluid Temperature	PTFE 212°F (100°C) UHMWPE 158°F (70°C)
Min/Max Air Pressure	30 psi (2 bar) minimum startup air pressure 100 psi (7 bar) maximum supply air pressure
Max. Sound Pressure	82.0 dB(a)
Max. Sound Power	74.8 dB(a)
Instruction Manual	334794

**May vary depending on materials*

Performance Charts

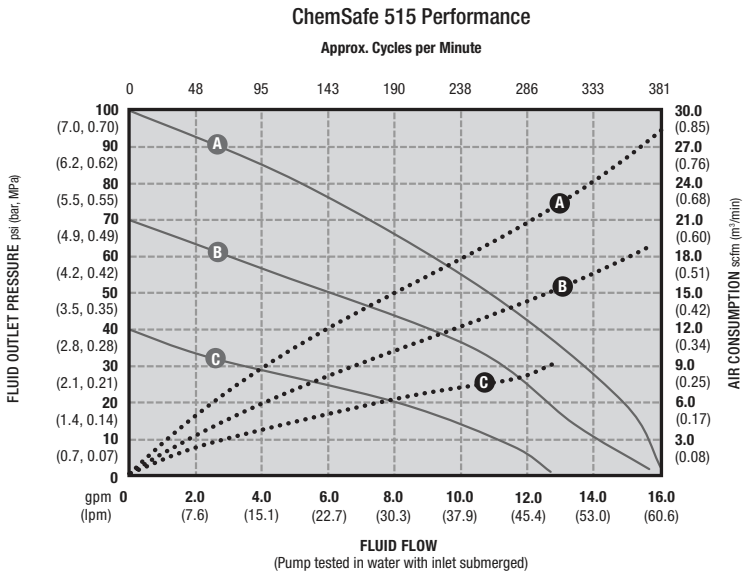

AIR PRESSURE	LEGEND
(A) = at 100 psi (7 bar, 0.7 MPa)	Air Consumption •••••
(B) = at 70 psi (4.8 bar, 0.48 MPa)	Fluid Pressure ——
(C) = at 40 psi (2.8 bar, 0.28 MPa)	

Dimensions

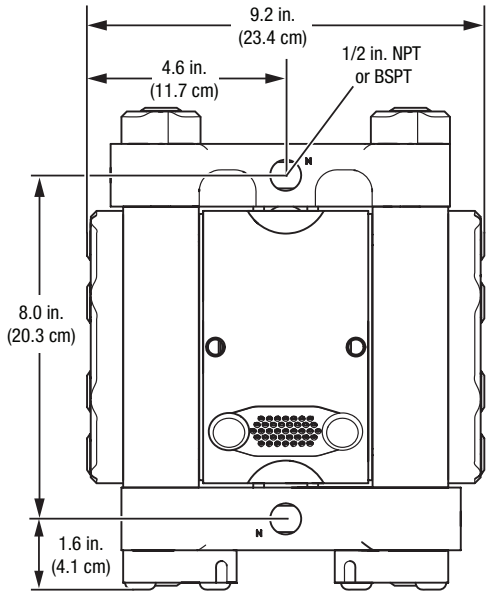

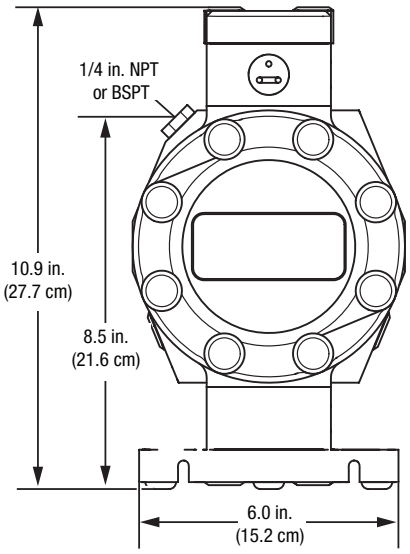

ChemSafe 1040 Plastic Pump
Air-Operated Double Diaphragm

Selector Tool

To order a ChemSafe 1040, use the online selector tool at **www.graco.com/pumpselectors** or contact your distributor.

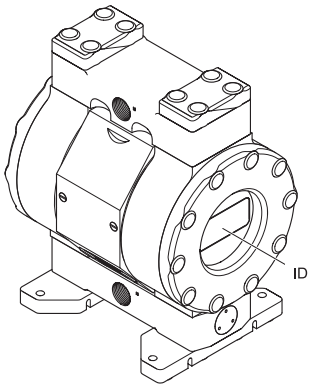

NOTE: Check the identification plate (ID) for the Configuration Number of your pump. Use the following matrix to define the components of your pump.

Example of Product Selector Tool on www.graco.com/pumpselectors.

Pump Configuration Options

Pump Model (1 inch port, 37.5 gpm)	Center Section and Air Valve Material		Fluid Covers and Manifolds		Seat Material		Ball Material	
1040PT 1 in PTFE	**P01A**	Polypropylene center with npt air inlet	**PT3**	PTFE, NPT	**PT**	PTFE	**PT**	PTFE
1040UH 1 in UHMWPE			**PT4**	PTFE, BSPT	**UH**	UHMWPE		
			UH3	UHMWPE, NPT				
	P03A	Polypropylene center with bspt air inlet	**UH4**	UHMWPE, BSPT				

Diaphragm Material		Manifold and Seat Seal Material	
BN	Buna-N Overmolded*	**PT**	PTFE
EP	EPDM Overmolded*		
PO	PTFE Overmolded		

**Only available on 1040UH*

Popular Models

Part Number	Model	Fluid Path	Seat	Ball	Port	Diaphragm
24X424	ChemSafe 1040	PTFE	PTFE	PTFE	BSPT	Overmolded PTFE
24X423	ChemSafe 1040	PTFE	PTFE	PTFE	NPT	Overmolded PTFE
24X544	ChemSafe 1040	UHMWPE	UHMWPE	PTFE	BSPT	Overmolded EPDM
24X545	ChemSafe 1040	UHMWPE	UHMWPE	PTFE	NPT	Overmolded EPDM
24X490	ChemSafe 1040	UHMWPE	UHMWPE	PTFE	BSPT	Overmolded Buna-N
24X489	ChemSafe 1040	UHMWPE	UHMWPE	PTFE	NPT	Overmolded Buna-N
24X492	ChemSafe 1040	UHMWPE	UHMWPE	PTFE	BSPT	Overmolded PTFE
24X491	ChemSafe 1040	UHMWPE	UHMWPE	PTFE	NPT	Overmolded PTFE

Technical Specifications

ChemSafe 1040	Polypropylene
Max Flow Rate*	38.8 gpm (146 lpm)
Displacement Per Cycle	0.148 gal (0.56 l)
Connection Sizes/Types	1" NPT, 1" BSPT
Max. Pumpable Solids	0.24 in (6.1 mm)
Suction Lift Dry*	13 ft (4.0 m)
Suction Lift Wet*	31 ft (9.5 m)
Weight (PTFE)	40 lb (18 kg)
Weight (UHMWPE)	26.4 lb (12 kg)
Max Air/Fluid Temperature	PTFE 212°F (100°C) UHMWPE 158°F (70°C)
Min/Max Air Pressure	30 psi (2 bar) minimum startup air pressure 100 psi (7 bar) maximum supply air pressure
Max. Sound Pressure	83.3 dB(a)
Max. Sound Power	78.3 dB(a)
Instruction Manual	334795

**May vary depending on materials*

ChemSafe 1040 Plastic Pump

Performance Charts

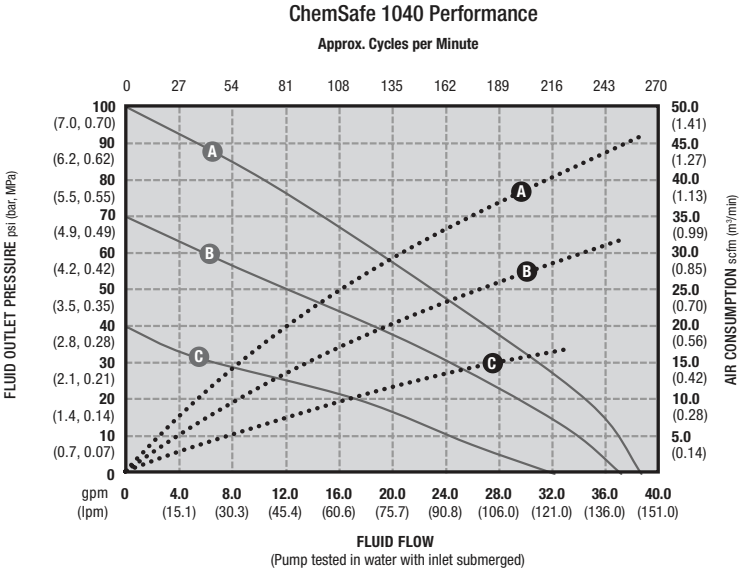

AIR PRESSURE	LEGEND
(A) = at 100 psi (7 bar, 0.7 MPa)	Air Consumption •••••
(B) = at 70 psi (4.8 bar, 0.48 MPa)	Fluid Pressure ——
(C) = at 40 psi (2.8 bar, 0.28 MPa)	

Dimensions

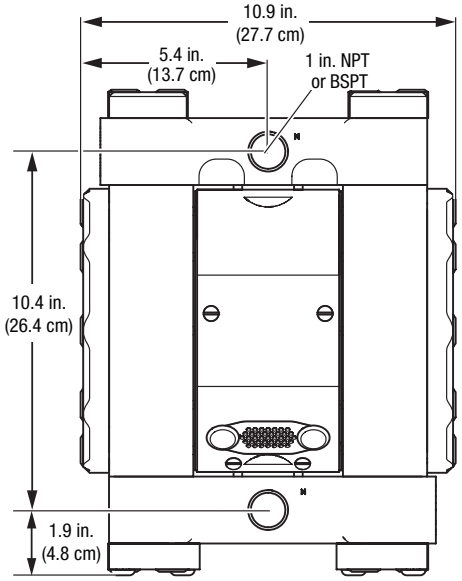

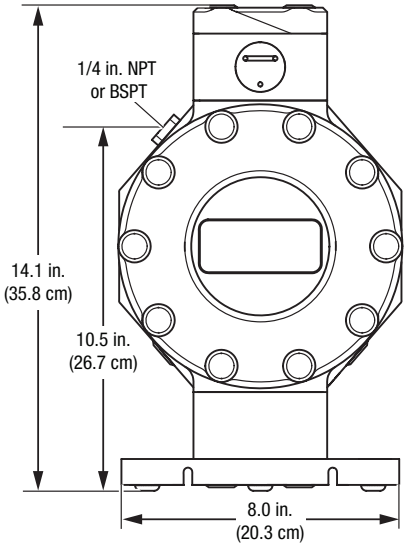

Selector Tool

To order a ChemSafe 1590, use the online selector tool at **www.graco.com/pumpselectors** or contact your distributor.

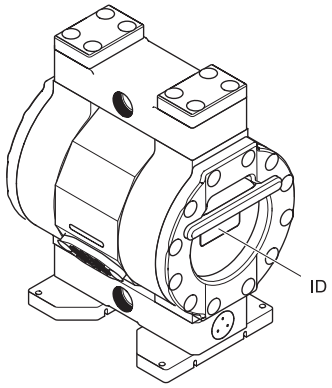

NOTE: Check the identification plate (ID) for the Configuration Number of your pump. Use the following matrix to define the components of your pump.

Example of Product Selector Tool on www.graco.com/pumpselectors.

Pump Configuration Options

Pump Model (1.5 inch port, 85.2 gpm)	Center Section and Air Valve Material		Fluid Covers and Manifolds		Seat Material		Ball Material	
1590PT 1.5 in PTFE **1590UH** 1.5 in UHMWPE	**P01A**	Polypropylene center with npt air inlet	**PT3**	PTFE, NPT	**PT**	PTFE	**PT**	PTFE
			PT4	PTFE, BSPT	**UH**	UHMWPE		
			UH3	UHMWPE, NPT				
	P03A	Polypropylene center with bspt air inlet	**UH4**	UHMWPE, BSPT				

Diaphragm Material		Manifold and Seat Seal Material	
BN	Buna-N Overmolded*	**PT**	PTFE
EP	EPDM Overmolded*		
PO	PTFE Overmolded		

**Only available on 1590UH*

ChemSafe 1590 Plastic Pump

Popular Models

Part Number	Model	Fluid Path	Seat	Ball	Port	Diaphragm
24X422	ChemSafe 1590	PTFE	PTFE	PTFE	BSPT	Overmolded PTFE
24X421	ChemSafe 1590	PTFE	PTFE	PTFE	NPT	Overmolded PTFE
24X549	ChemSafe 1590	UHMWPE	UHMWPE	PTFE	BSPT	Overmolded EPDM
24X551	ChemSafe 1590	UHMWPE	UHMWPE	PTFE	NPT	Overmolded EPDM
24X514	ChemSafe 1590	UHMWPE	UHMWPE	PTFE	BSPT	Overmolded Buna-N
24X515	ChemSafe 1590	UHMWPE	UHMWPE	PTFE	NPT	Overmolded Buna-N
24X486	ChemSafe 1590	UHMWPE	UHMWPE	PTFE	BSPT	Overmolded PTFE
24X485	ChemSafe 1590	UHMWPE	UHMWPE	PTFE	NPT	Overmolded PTFE

Technical Specifications

ChemSafe 1590	Polypropylene
Max Flow Rate*	99.5 gpm (376 lpm)
Displacement Per Cycle	0.433 gal (1.64 l)
Connection Sizes/Types	1-1/2" NPT, 1-1/2" BSPT
Max. Pumpable Solids	0.32 in (8.1 mm)
Suction Lift Dry*	16 ft (4.9 m)
Suction Lift Wet*	31 ft (9.5 m)
Weight (PTFE)	95.2 lb (43.2 kg)
Weight (UHMWPE)	66 lb (30 kg)
Max Air/Fluid Temperature	PTFE 212°F (100°C) UHMWPE 158°F (70°C)
Min/Max Air Pressure	30 psi (2 bar) minimum startup air pressure 100 psi (7 bar) maximum supply air pressure
Max. Sound Pressure	89.8 dB(a)
Max. Sound Power	91.1 dB(a)
Instruction Manual	334796

**May vary depending on materials*

Performance Charts

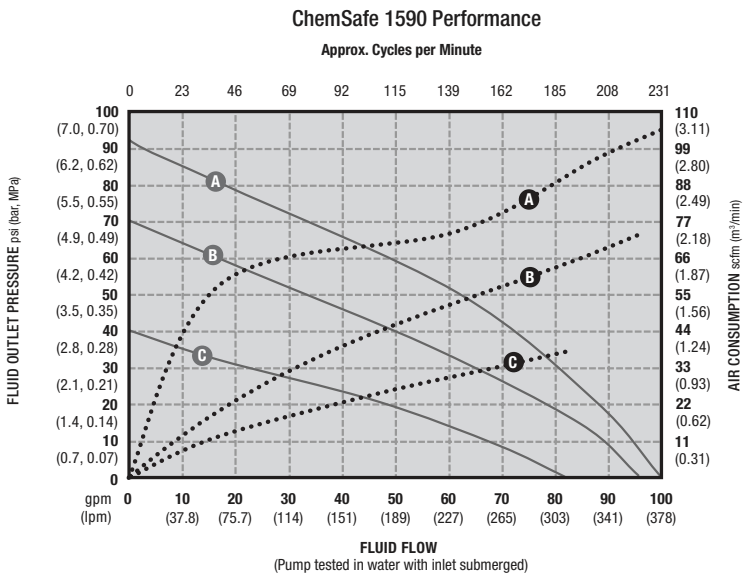

AIR PRESSURE	LEGEND
(A) = at 100 psi (7 bar, 0.7 MPa)	Air Consumption • • • • • •
(B) = at 70 psi (4.8 bar, 0.48 MPa)	Fluid Pressure ———
(C) = at 40 psi (2.8 bar, 0.28 MPa)	

Dimensions

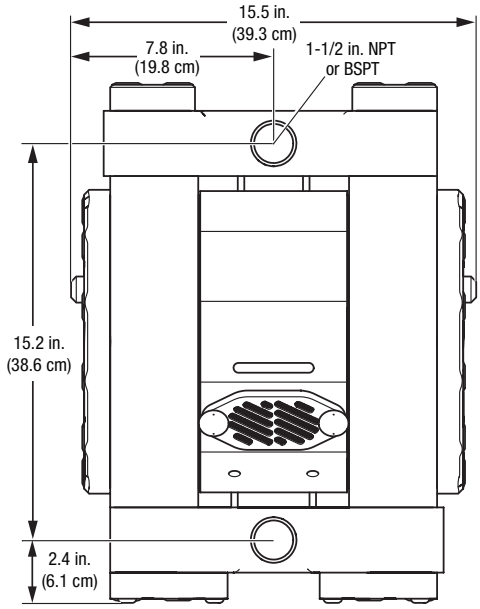

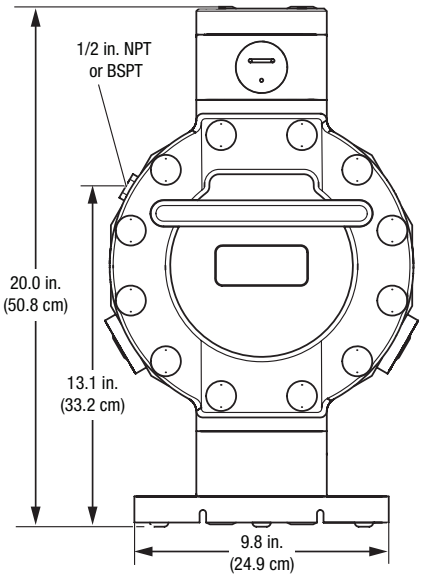

Notes

Ordering Information

D	X	X	X	X	X
Diaphragm Pump	Pump Size	Wetted Parts	Seats	Balls/ Checks	Diaphragms

PUMP SIZE (AIR MOTOR TYPE AND MATERIAL)	WETTED PARTS	SEATS	CHECK VALVES	DIAPHRAGM
1 = 1/4" (6.35 mm) Standard: polypropylene center section	1 = Acetal (npt)	0 = No Seats	2 = Acetal	1 = PTFE
2 = 1/4" (6.35 mm) Remote: polypropylene center section	2 = Poly (npt)		9 = Polypropylene	6 = Santoprene
	5 = PVDF (npt)		A = PVDF	

Popular Models

Material	Part Number (NPT Ported)		Part Number (BSP Ported)		Materials for Check Valves	Materials for Diaphragms	Fluid Kit	Air Kit	Air Control**
	Standard Air Valve	Remote* Air Valve	Standard Air Valve	Remote* Air Valve					
Acetal	D11021	D21021	D11021	D21021	Acetal	PTFE	D01021	238853	246946
	D11026	D21026	D11026	D21026	Acetal	Santoprene	D01026	238853	246946
PVDF	D150A1	D250A1	D150A1	D250A1	PVDF	PTFE	D010A1	238853	246946
	D150A6	D250A6	D150A6	D250A6	PVDF	Santoprene	D010A6	238853	246946
Polypropylene	D12091	D22091	D12091	D22091	Polypropylene	PTFE	D01091	238853	246946
	D12096	D22096	D12096	D22096	Polypropylene	Santoprene	D01096	238853	246946

** Requires Cycleflo or external valve control*

*** Air control includes air regulator and filter with gauge*

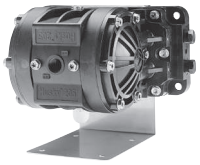

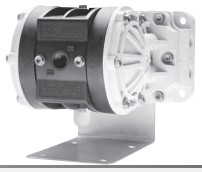

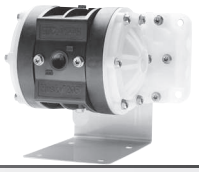

Wall bracket standard with pump

Technical Specifications

Husky 205 Plastic Pumps	Acetal	Polypropylene	PVDF
Maximum fluid working pressure	100 psi (7 bar, 0.7 MPa)	100 psi (7 bar, 0.7 MPa)	100 psi (7 bar, 0.7 MPa)
Maximum free flow delivery*	5.0 gpm (18.9 lpm)	5.0 gpm (18.9 lpm)	5.0 gpm (18.9 lpm)
Maximum pump speed	250 cpm	250 cpm	250 cpm
Displacement per cycle**	0.012 gallon (0.045 liter)	0.012 gallon (0.045 liter)	0.012 gallon (0.045 liter)
Maximum suction lift (D12096)	10 ft (3 m) dry	10 ft (3 m) dry	10 ft (3 m) dry
Maximum size pumpable solids	0.06 in (1.5 mm)	0.06 in (1.5 mm)	0.06 in (1.5 mm)
Maximum ambient operating temperature***	180°F (82°C)	150°F (66°C)	180°F (82°C)
Maximum diaphragm operating temperature***	Refer to page 7	Refer to page 7	Refer to page 7
Typical sound level at 70 psi (4.9 bar, 0.49 MPa) air @ 125 cpm	70 dBa	70 dBa	70 dBa
Maximum air consumption	9.0 scfm (0.252 m3/min)	9.0 scfm (0.252 m3/min)	9.0 scfm (0.252 m3/min)
Air pressure operating range	20 to 100 psi (1.4 to 7 bar, 0.14 to 0.7 MPa)	20 to 100 psi (1.4 to 7 bar, 0.14 to 0.7 MPa)	20 to 100 psi (1.4 to 7 bar, 0.14 to 0.7 MPa)
Air inlet size	1/4 npt(f)	1/4 npt(f)	1/4 npt(f)
Air exhaust port size	1/4 npt(f)	1/4 npt(f)	1/4 npt(f)
Fluid inlet & outlet size****	1/4 npt(f)	1/4 npt(f)	1/4 npt(f)
Weight	2.5 lb (1.1 kg)	2.0 lb (0.9 kg)	2.8 lb (1.3 kg)
Wetted parts (in addition to ball, seat and diaphragm materials– which may vary by pump)	Acetal with Stainless Steel fibers, PTFE, Acetal, Santoprene	Glass-filled Polypropylene, Santoprene, PTFE, Polypropylene	PVDF, PTFE, Santoprene
Instruction manual	308652	308652	308652

*** Displacement per cycle may vary based on suction condition, discharge head, air pressure and fluid type*
**** Actual pump performance may be affected by prolonged usage at temperature*
***** Hybrid thread allows for either 1/4 npt or 1/4 bspt fitting*

Husky 205 Plastic Pumps

Performance Charts

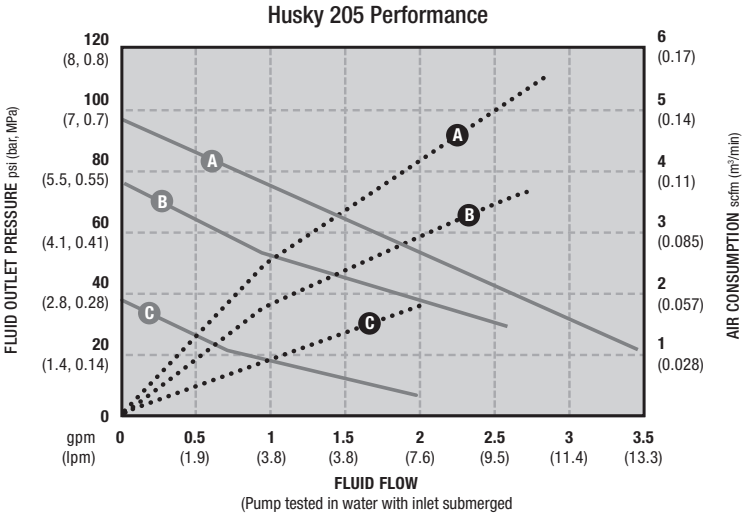

AIR PRESSURE	LEGEND
Ⓐ = at 100 psi (7 bar, 0.7 MPa)	Air Consumption •••••
Ⓑ = at 70 psi (4.8 bar, 0.48 MPa)	Fluid Pressure ———
Ⓒ = at 40 psi (2.8 bar, 0.28 MPa)	

Dimensions

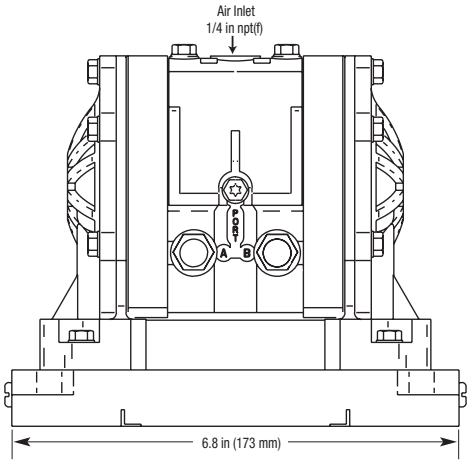

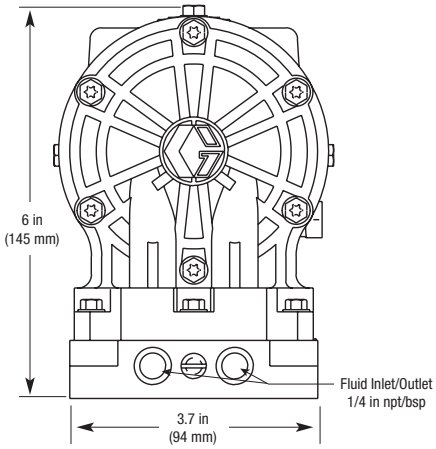

Typical System Drawings

Husky 205 Wall-Mount
(shown with CycleFlo controller)

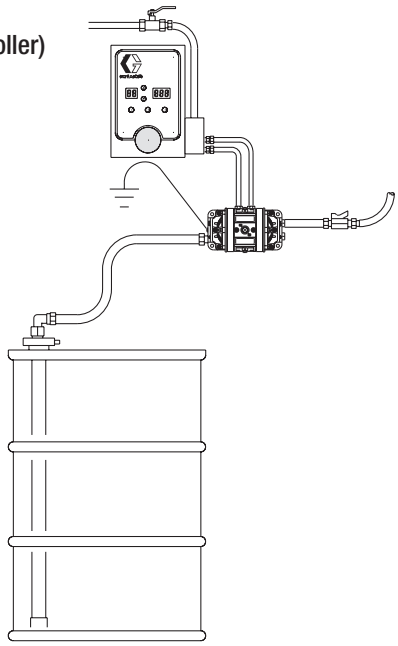

Ordering Information

D	X	X	X	X	X
Diaphragm Pump	Pump Size	Wetted Parts	Seats	Balls/ Checks	Diaphragms

PUMP SIZE (AIR MOTOR TYPE AND MATERIAL)	WETTED PARTS	SEATS	BALLS	DIAPHRAGM
3 = 3/8" (9.52 mm) Standard: polypropylene center section	1 = Acetal (npt)	2 = Acetal	1 = PTFE	1 = PTFE
	2 = Poly (npt)	3 = Stainless Steel	3 = SST	5 = TPE
		9 = Polypropylene	5 = TPE	6 = Santoprene
	A = Acetal (bsp)		6 = Santoprene	7 = Buna N
	B = Poly (bsp)		7 = Buna N	

Popular Models

Material	Part Number (NPT Ported)		Part Number (BSP Ported)		Materials for Seats	Materials for Balls	Materials for Diaphragms	Fluid Kit	Air Kit	Air Control*
	Standard Air Valve	Remote Air Valve	Standard Air Valve	Remote Air Valve						
Acetal	D31211	NA	D3A211	NA	Acetal	PTFE	PTFE	D03211	239952	246946
	D31255	NA	D3A255	NA	Acetal	TPE	TPE	D03255	239952	246946
	D31277	NA	D3A277	NA	Acetal	Buna-N	Buna-N	D03277	239952	246946
	D31311	NA	D3A311	NA	Stainless Steel	PTFE	PTFE	D03311	239952	246946
Polypropylene	D32211	NA	D3B211	NA	Acetal	PTFE	PTFE	D03211	239952	246946
	D32255	NA	D3B255	NA	Acetal	TPE	TPE	D03255	239952	246946
	D32277	NA	D3B277	NA	Acetal	Buna-N	Buna-N	D03277	239952	246946
	D32311	NA	D3B311	NA	Stainless Steel	PTFE	PTFE	D03311	239952	246946
	D32366	NA	D3B366	NA	Stainless Steel	Santoprene	Santoprene	D03366	239952	246946
	D32911	NA	D3B911	NA	Polypropylene	PTFE	PTFE	D03911	239952	246946
	D32955	NA	D3B955	NA	Polypropylene	TPE	TPE	D03955	239952	246946
	D32966	NA	D3B966	NA	Polypropylene	Santoprene	Santoprene	D03966	239952	246946
	D32977	NA	D3B977	NA	Polypropylene	Buna-N	Buna-N	D03977	239952	246946

** Air control includes air regulator and filter with gauge (see drawing on page 13)*

Husky 307 Plastic Pumps

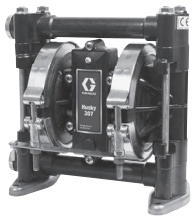

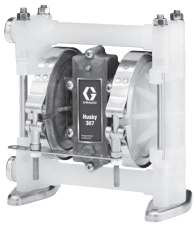

Technical Specifications

Husky 307 Plastic Pumps	Acetal	Polypropylene
Maximum fluid working pressure	100 psi (7 bar, 0.7 MPa)	100 psi (7 bar, 0.7 MPa)
Maximum free flow delivery*	7.0 gpm (26.5 lpm)	7.0 gpm (26.5 lpm)
Maximum pump speed	330 cpm	330 cpm
Displacement per cycle**	0.02 gallon (0.076 liter)	0.02 gallon (0.076 liter)
Maximum suction lift (D31255)	12 ft (3.7 m) dry	12 ft (3.7 m) dry
Maximum size pumpable solids	0.06 in (1.5 mm)	0.06 in (1.5 mm)
Maximum ambient operating temperature***	180°F (65.5°C)	150°F (65.5°C)
Maximum diaphragm operating temperature***	Refer to page 7	Refer to page 7
Typical sound level at 50 psi (3.5 bar, 0.35 MPa) air @ 50 cpm	75 dBa	75 dBa
Maximum air consumption	6 scfm (0.17 m3/min)	6 scfm (0.17 m3/min)
Air pressure operating range	20 to 100 psi (1.4 to 8.4 bar, 0.14 to 0.84 MPa)	20 to 100 psi (1.4 to 8.4 bar, 0.14 to 0.84 MPa)
Air inlet size	1/4 npt(f) or bspt(f)	1/4 npt(f) or bspt(f)
Fluid inlet & outlet size****	3/8 npt(f)	3/8 npt(f)
Weight	5.2 lb (2.4 kg)	4.75 lb (2.2 kg)
Wetted parts (in addition to ball, seat and diaphragm materials–which may vary by pump)	Acetal with Stainless Steel fibers, PTFE	Polypropylene, PTFE
Instruction manual	308553	308553

**Flow rates are with muffler and do not vary based on diaphragm material*
***Displacement per cycle may vary based on suction condition, discharge head, air pressure and fluid type*
****Actual pump performance may be affected by prolonged usage at temperature*

Performance Chart

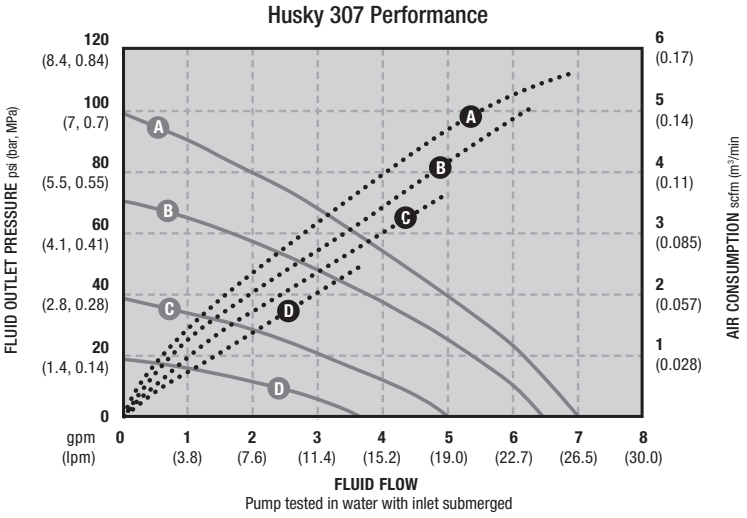

Pump tested in water with inlet submerged

AIR PRESSURE	LEGEND
Ⓐ = at 100 psi (7 bar, 0.7 MPa)	Air Consumption •••••
Ⓑ = at 70 psi (4.8 bar, 0.48 MPa)	Fluid Pressure ———
Ⓒ = at 40 psi (2.8 bar, 0.28 MPa)	
Ⓓ = at 20 psi (1.4 bar, 0.14 MPa)	

Dimensions

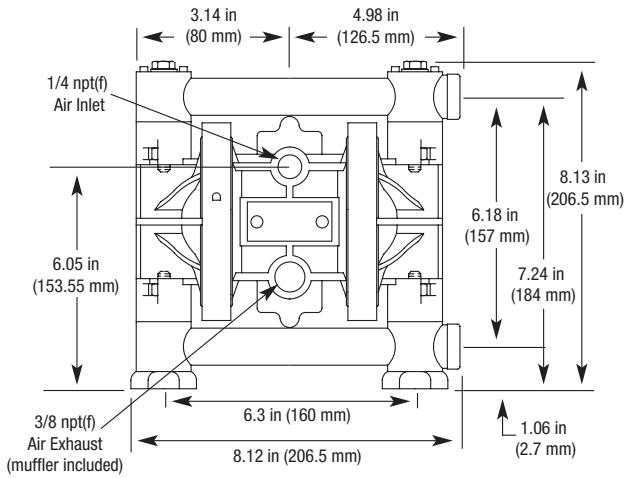

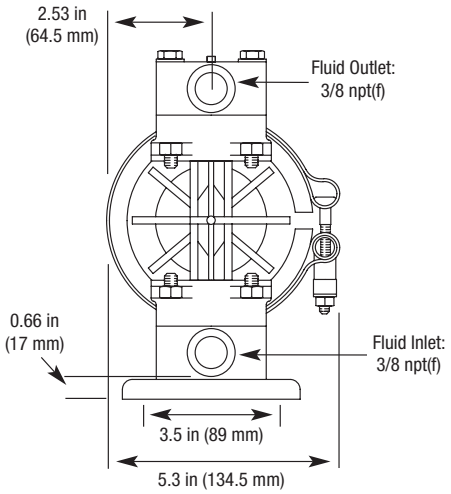

Typical System Drawings

Husky 307 Wall-Mount with Siphon Feed

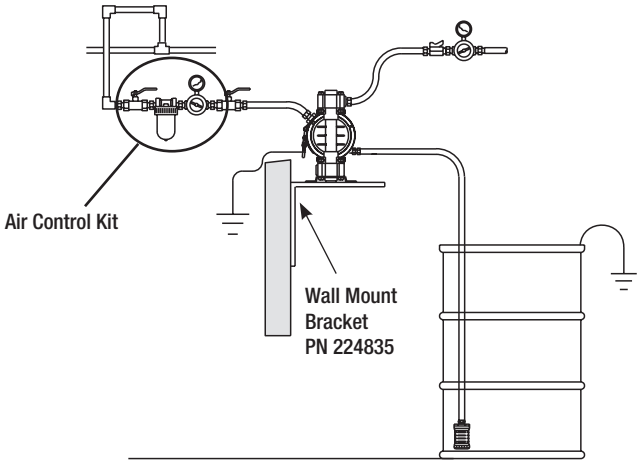

Husky 307 Drum-Mount with Siphon Feed

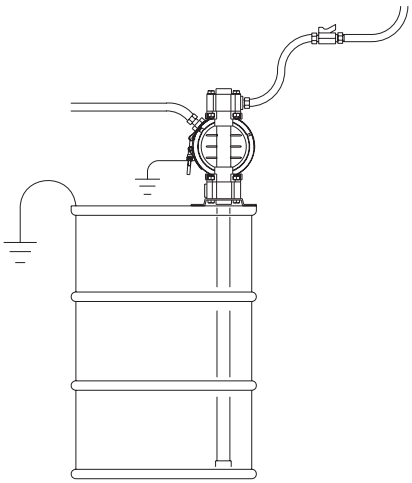

Husky 515 Plastic Pumps
Air-Operated Double Diaphragm

Ordering Information

D	X	X	X	X	X
Diaphragm Pump	Pump Size	Wetted Parts	Seats	Balls/ Checks	Diaphragms

PUMP SIZE (AIR MOTOR TYPE AND MATERIAL)	WETTED PARTS	SEATS	BALLS	DIAPHRAGM
5 = 1/2" center (12.7 mm) or 3/4" ends (19.05) Standard: polypropylene center section	1 = Acetal (npt)	2 = Acetal	1 = PTFE	1 = PTFE
4 = 1/2" center (12.7 mm) or 3/4" ends (19.05) Remote: polypropylene center section	2 = Poly (npt)	3 = Stainless Steel	3 = Stainless Steel	5 = TPE
	5 = PVDF (npt)	9 = Polypropylene	5 = TPE	6 = Santoprene
	A = Acetal * (bsp)	A = PVDF	6 = Santoprene	7 = Buna N
	B = Poly * (bsp)	D = Urethane Duckbill	7 = Buna N	8 = Fluoroelastomer
	E = PVDF (bsp)		8 = Fluoroelastomer	
** = BSP plastic in 1/2" (12.7 mm) pumps*			0 = Duckbill	

Popular Models

Material	Part Number (NPT Ported)		Part Number (BSP Ported)		Materials for Seats	Materials for Balls	Materials for Diaphragms	Fluid Kit	Air Kit	Air Control**
	Standard Air Valve	Remote* Air Valve	Standard Air Valve	Remote* Air Valve						
Acetal	D51211	D41211	D5A211	D4A211	Acetal	PTFE	PTFE	D05211	241657	246946
	D51255	D41255	D5A255	D4A255	Acetal	TPE	TPE	D05255	241657	246946
	D51277	D41277	D5A277	D4A277	Acetal	Buna-N	Buna-N	D05277	241657	246946
	D51311	D41311	D5A311	D4A311	Stainless Steel	PTFE	PTFE	D05311	241657	246946
	D51331	D41331	D5A331	D4A331	Stainless Steel	Stainless Steel	PTFE	D05331	241657	246946
	D51D05	D41D05	D5AD05	D4AD05	Duckbill		TPE	D05D05	241657	246946
	D51D06	D41D06	D5AD06	D4AD06	Duckbill		Santoprene	D05D06	241657	246946
	D51D07	D41D07	D5AD07	D4AD07	Duckbill		Buna-N	D05D07	241657	246946
Polypropylene	D52211	D42211	D5B211	D4B211	Acetal	PTFE	PTFE	D05211	241657	246946
	D52277	D42277	D5B277	D4B277	Acetal	Buna-N	Buna-N	D05277	241657	246946
	D52311	D42311	D5B311	D4B311	Stainless Steel	PTFE	PTFE	D05311	241657	246946
	D52331	D42331	D5B331	D4B331	Stainless Steel	Stainless Steel	PTFE	D05331	241657	246946
	D52336	D42336	D5B336	D4B336	Stainless Steel	Stainless Steel	Santoprene	D05336	241657	246946
	D52911	D42911	D5B911	D4B911	Polypropylene	PTFE	PTFE	D05911	241657	246946
	D52955	D42955	D5B955	D4B955	Polypropylene	TPE	TPE	D05955	241657	246946
	D52966	D42966	D5B966	D4B966	Polypropylene	Santoprene	Santoprene	D05966	241657	246946
	D52977	D42977	D5B977	D4B977	Polypropylene	Buna-N	Buna-N	D05977	241657	246946
	D52988	D42988	D5B988	D4B988	Polypropylene	Fluoroelastomer	Fluoroelastomer	D05988	241657	246946
	D52D05	D42D05	D5BD05	D4BD05	Duckbill		TPE	D05D05	241657	246946
	D52D06	D42D06	D5BD06	D4BD06	Duckbill		Santoprene	D05D06	241657	246946
	D52D07	D42D07	D5BD07	D4BD07	Duckbill		Buna-N	D05D07	241657	246946
PVDF	D55A11	D45A11	D5EA11	D4EA11	PVDF	PTFE	PTFE	D05A11	241657	246946
	D55A88	D45A88	D5EA88	D4EA88	PVDF	Fluoroelastomer	Fluoroelastomer	D05A88	241657	246946

**Required Cycleflo or external valve control*

*** Air control includes air regulator and filter with gauge (see drawing on page 16)*

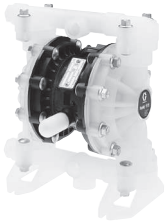

Technical Specifications

Husky 515 Plastic Pumps	Acetal	Polypropylene	PVDF
Maximum fluid working pressure	100 psi (7 bar, 0.7 MPa)	100 psi (7 bar, 0.7 MPa)	100 psi (7 bar, 0.7 MPa)
Maximum free flow delivery*	15 gpm (57 lpm)	15 gpm (57 lpm)	15 gpm (57 lpm)
Maximum pump speed	400 cpm	400 cpm	400 cpm
Displacement per cycle**	0.04 gallon (0.15 liter)	0.04 gallon (0.15 liter)	0.04 gallon (0.15 liter)
Maximum suction lift ***	15 ft (4.5 m) dry	15 ft (4.5 m) dry	15 ft (4.5 m) dry
Maximum size pumpable solids	0.09 in (2.5 mm)	0.09 in (2.5 mm)	0.09 in (2.5 mm)
Maximum ambient operating temperature†	180°F (82°C)	150°F (66°C)	180°F (82°C)
Maximum diaphragm operating temperature†	Refer to page 7	Refer to page 7	Refer to page 7
Typical sound level at 70 psi (4.9 bar, 0.49 MPa) air @ 125 cpm	74 dBa	74 dBa	74 dBa
Maximum air consumption	28 scfm (0.672 m3/min)	28 scfm (0.672 m3/min)	28 scfm (0.672 m3/min)
Air pressure operating range	30 to 100 psi (2.1 to 7 bar, 0.21 to 0.7 MPa)	30 to 100 psi (2.1 to 7 bar, 0.21 to 0.7 MPa)	30 to 100 psi (2.1 to 7 bar, 0.21 to 0.7 MPa)
Air inlet size	1/4 npt(f)	1/4 npt(f)	1/4 npt(f)
Air exhaust port size	3/8 npt(f)	3/8 npt(f)	3/8 npt(f)
Fluid inlet & outlet size****	1/2 npt(f) or bspt(f)	1/2 npt(f) or bspt(f)	1/2 npt(f) or bspt(f)
Weight	7.8 lb (3.5 kg)	6.5 lb (2.9 kg)	8.5 lb (3.9 kg)
Wetted parts (in addition to ball, seat and diaphragm materials– which may vary by pump)	Groundable Acetal, PTFE, SST	Polypropylene, PTFE, SST	PVDF, PTFE
Instruction manual	308981	308981	308981

** Flow rates are with muffler and do not vary based on diaphragm material.*
*** Displacement per cycle may vary based on suction condition, discharge head, air pressure and fluid type*
**** Duckbill suction lift 11 ft (3.3 m)*
***** Hybrid thread allows for either 1/4 npt or 1/4 bspt fitting*
† Actual pump performance may be affected by prolonged usage at temperature.

Performance Charts

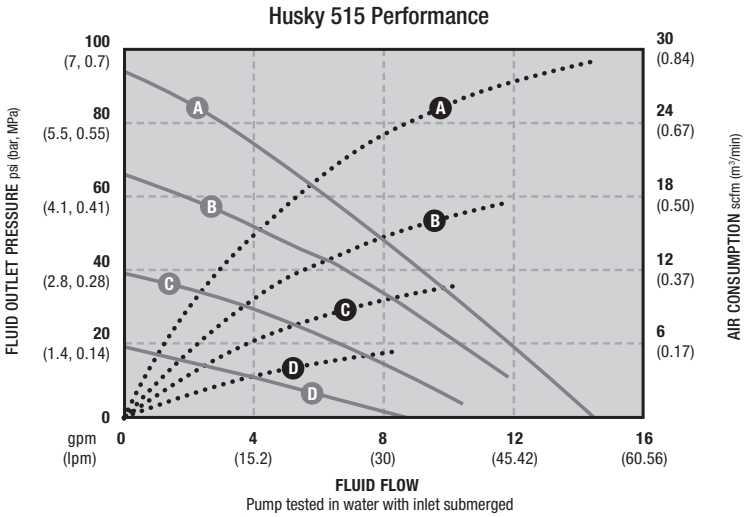

Pump tested in water with inlet submerged

AIR PRESSURE	LEGEND
(A) = at 100 psi (7 bar, 0.7 MPa)	Air Consumption •••••
(B) = at 70 psi (4.8 bar, 0.48 MPa)	Fluid Pressure ———
(C) = at 40 psi (2.8 bar, 0.28 MPa)	
(D) = at 20 psi (1.4 bar, 0.14 MPa)	

Husky 515 Plastic Pumps

Dimensions

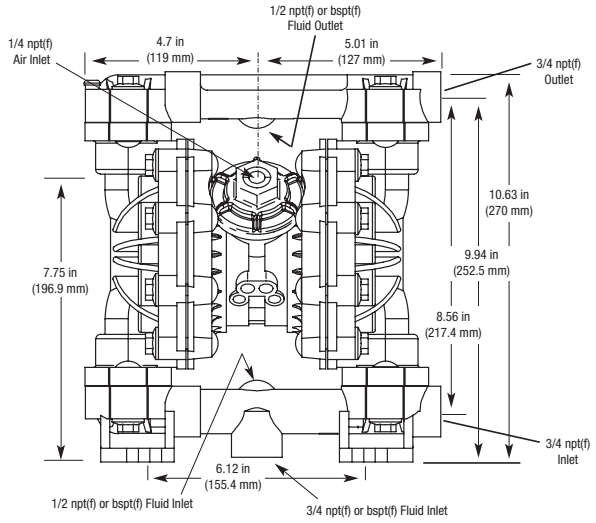

Typical System Drawings

Husky 515 Wall-Mount with Drum Feed

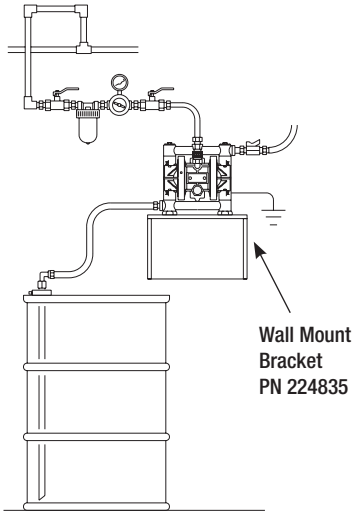

Husky 515 Drum-Mount with Siphon Feed

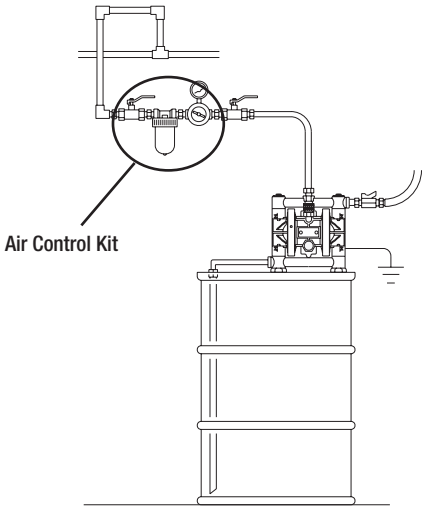

Ordering Information

D	X	X	X	X	X
Diaphragm Pump	Pump Size	Wetted Parts	Seats	Balls/ Checks	Diaphragms

PUMP SIZE (AIR MOTOR TYPE AND MATERIAL)	WETTED PARTS	SEATS	BALLS	DIAPHRAGM
5 = 3/4" (19.05 mm) Standard: polypropylene center section	3 = Aluminum (npt)	2 = Acetal	1 = PTFE	1 = PTFE
4 = 3/4" (19.05 mm) Remote: polypropylene center section	4 = Stainless Steel (npt)	3 = Stainless Steel	3 = Stainless Steel	5 = TPE
		9 = Polypropylene	5 = TPE	6 = Santoprene
	C = Aluminum (bsp)	A = PVDF	6 = Santoprene	7 = Buna N
	D = Stainless Steel (bsp)	D = Duckbill	7 = Buna N	8 = Fluoroelastomer
			8 = Fluoroelastomer	

Popular Models

Material	Part Number (NPT Ported)		Part Number (BSP Ported)		Materials for Seats	Materials for Balls	Materials for Diaphragms	Fluid Kit	Air Kit	Air Control**
	Standard Air Valve	Remote* Air Valve	Standard Air Valve	Remote* Air Valve						
Aluminum	D53211	D43211	D5C211	D4C211	Acetal	PTFE	PTFE	D05211	241657	246946
	D53255	D43255	D5C255	D4C255	Acetal	TPE	TPE	D05255	241657	246946
	D53277	D43277	D5C277	D4C277	Acetal	Buna-N	Buna-N	D05277	241657	246946
	D53288	D43288	D5C288	D4C288	Acetal	Fluoroelastomer	Fluoroelastomer	D05288	241657	246946
	D53311	D43311	D5C311	D4C311	Stainless Steel	PTFE	PTFE	D05311	241657	246946
	D53331	D43331	D5C331	D4C331	Stainless Steel	Stainless Steel	PTFE	D05331	241657	246946
	D53355	D43355	D5C355	D4C355	Stainless Steel	TPE	TPE	D05355	241657	246946
	D53366	D43366	D5C366	D4C366	Stainless Steel	Santoprene	Santoprene	D05366	241657	246946
	D53377	D43377	D5C377	D4C377	Stainless Steel	Buna-N	Buna-N	D05377	241657	246946
	D53388	D43388	D5C388	D4C388	Stainless Steel	Fluoroelastomer	Fluoroelastomer	D05388	241657	246946
	D53911	D43911	D5C911	D4C911	Polypropylene	PTFE	PTFE	D05911	241657	246946
	D53955	D43955	D5C955	D4C955	Polypropylene	TPE	TPE	D05955	241657	246946
	D53966	D43966	D5C966	D4C966	Polypropylene	Santoprene	Santoprene	D05966	241657	246946
	D53977	D43977	D5C977	D4C977	Polypropylene	Buna-N	Buna-N	D05977	241657	246946
	D53D05	D43D05	D5CD05	D4CD05		Duckbill	TPE	D05D05	241657	246946
	D53D06	D43D06	D5CD06	D4CD06		Duckbill	Santoprene	D05D06	241657	246946
	D53D07	D43D07	D5CD07	D4CD07		Duckbill	Buna-N	D05D07	241657	246946
Stainless Steel	D54211	D44211	D5D211	D4D211	Acetal	PTFE	PTFE	D05211	241657	246946
	D54311	D44311	D5D311	D4D311	Stainless Steel	PTFE	PTFE	D05311	241657	246946
	D54331	D44331	D5D331	D4D331	Stainless Steel	Stainless Steel	PTFE	D05331	241657	246946
	D54335	D44335	D5D335	D4D335	Stainless Steel	Stainless Steel	TPE	D05335	241657	246946
	D54336	D44336	D5D336	D4D336	Stainless Steel	Stainless Steel	Santoprene	D05336	241657	246946
	D54355	D44355	D5D355	D4D355	Stainless Steel	TPE	TPE	D05355	241657	246946
	D54366	D44366	D5D366	D4D366	Stainless Steel	Santoprene	Santoprene	D05366	241657	246946
	D54377	D44377	D5D377	D4D377	Stainless Steel	Buna-N	Buna-N	D05377	241657	246946
	D54388	D44388	D5D388	D4D388	Stainless Steel	Fluoroelastomer	Fluoroelastomer	D05388	241657	246946
	D54911	D44911	D5D911	D4D911	Polypropylene	PTFE	PTFE	D05911	241657	246946
	D54966	D44966	D5D966	D4D966	Polypropylene	Santoprene	Santoprene	D05966	241657	246946

** Requires CycleFlo or external valve control*

*** Air control includes air regulator and filter with gauge (see drawing on page 19)*

Husky 716 Metal Pumps

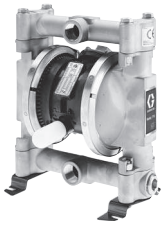

Technical Specifications

Husky 716 Metal Pumps	Aluminum	Stainless Steel
Maximum fluid working pressure	100 psi (7 bar, 0.7 MPa)	100 psi (7 bar, 0.7 MPa)
Maximum free flow delivery*	16 gpm (61 lpm)	16 gpm (61 lpm)
Maximum pump speed	400 cpm	400 cpm
Displacement per cycle**	0.04 gallon (0.15 liter)	0.04 gallon (0.15 liter)
Maximum suction lift	15 ft (4.5 m) dry	15 ft (4.5 m) dry
Maximum size pumpable solids	0.09 in (2.5 mm)	0.09 in (2.5 mm)
Maximum ambient operating temperature***	180ºF (82ºC)	180ºF (82ºC)
Maximum diaphragm operating temperature***	Refer to page 7	Refer to page 7
Typical sound level at 70 psi air (4.9 bar, 0.49 MPa) air @ 200 cpm	74 dBa	74 dBa
Maximum air consumption	28 scfm (0.672 m3/min)	28 scfm (0.672 m3/min)
Air pressure operating range	30 to 100 psi (2.1 to 7 bar, 0.21 to 0.7 MPa)	30 to 100 psi (2.1 to 7 bar, 0.21 to 0.7 MPa)
Air inlet size	1/4 npt(f)	1/4 npt(f)
Air exhaust port size	3/8 npt(f)	3/8 npt(f)
Fluid inlet & outlet size	3/4 npt(f) or bspt(f)	3/4 npt(f) or bspt(f)
Weight	8.5 lb (3.9 kg)	18 lb (8.2 kg)
Wetted parts (in addition to ball, seat and diaphragm materials–which may vary by pump)	Aluminum, Stainless Steel, PTFE, Buna-N, Santroprene, Zinc-Plated Steel	Acetal, Polypropylene, Stainless Steel, Polyester, Santoprene, Fluoroelastomer, Nickel-Plated Brass, Epoxy-Coated Steel
Instruction manual	308981	308981

**Flow rates are with muffler and do not vary based on diaphragm material*
***Displacement per cycle may vary based on suction condition, discharge head, air pressure and fluid type*
****Actual pump performance may be affected by prolonged usage at temperature*

Performance Charts

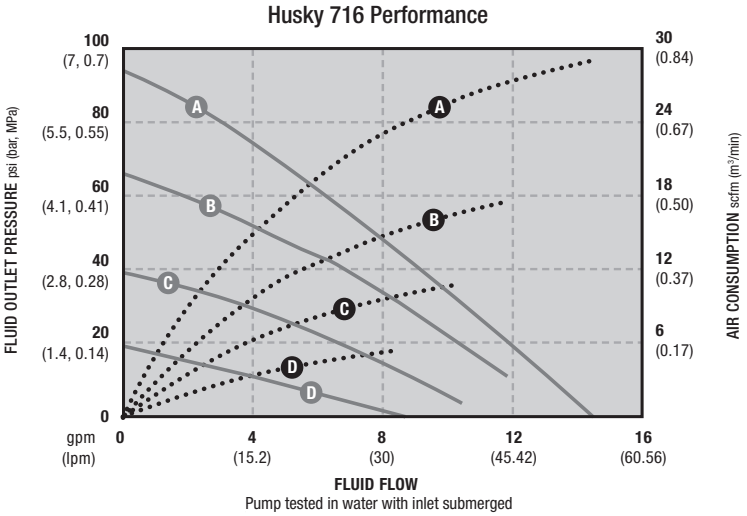

Pump tested in water with inlet submerged

AIR PRESSURE	LEGEND
(A) = at 100 psi (7 bar, 0.7 MPa)	Air Consumption •••••
(B) = at 70 psi (4.8 bar, 0.48 MPa)	Fluid Pressure ———
(C) = at 40 psi (2.8 bar, 0.28 MPa)	
(D) = at 20 psi (1.4 bar, 0.14 MPa)	

Dimensions

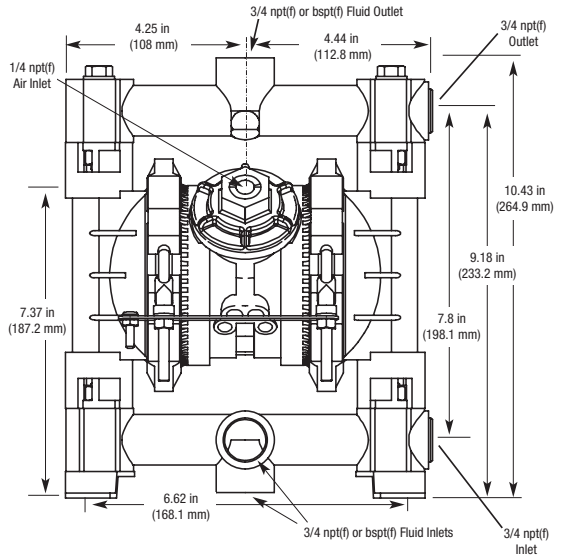

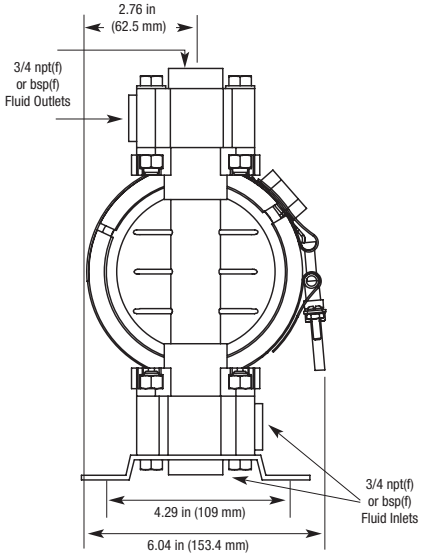

Typical System Drawings

Husky 716 Wall-Mount with Drum Feed

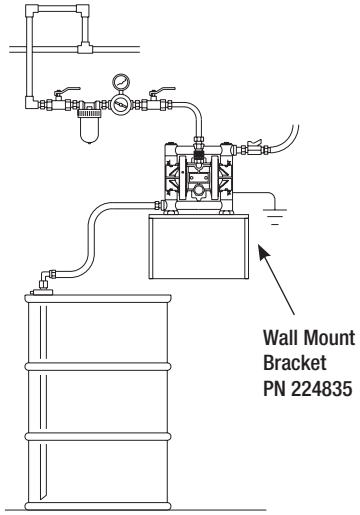

Husky 716 Drum-Mount with Siphon Feed

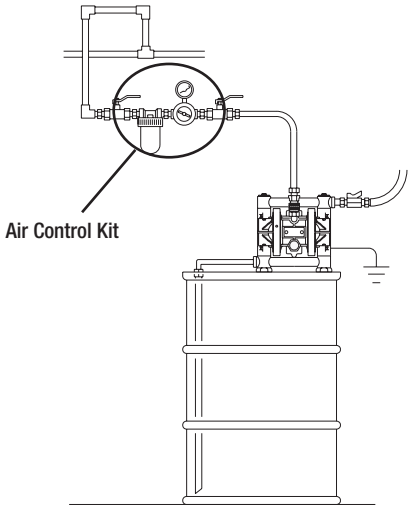

Husky 1050 Selector Tool

To order a Husky 1050, use the online selector tool at **www.graco.com/pumpselectors** or contact your distributor.

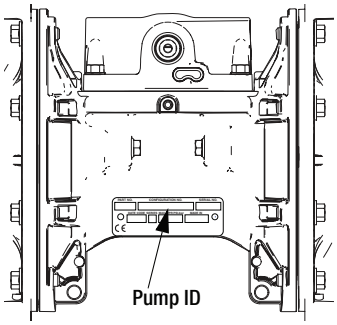

NOTE: Options for seats, check balls, diaphragms, and seals vary for the 1050C, 1050F, 1050P, and pump models.

Example of Product Selector Tool on www.graco.com/pumpselectors.

Pump Configuration Options

Pump (1 inch ports, 50 gpm)	Center Section and Air Valve Material		Air Valve/Monitoring	Fluid Covers and Manifolds	
C ★ Conductive Polypropylene 1050	Conductive Polypropylene	**C01A**	Standard	**C1**	Conductive polypropylene, center flange
		C01B	Pulse Count ✖	**C2**	Conductive polypropylene, end flange
		C01C	DataTrak ✖		
P Polypropylene 1050		**C01D**	Remote	**P1**	Polypropylene, center flange
	Polypropylene	**P01A**	Standard	**P2**	Polypropylene, end flange
F PVDF 1050		**P01B**	Pulse Count ✖		
		P01C	DataTrak ✖	**F1**	PVDF, center flange
		P01D	Remote	**F2**	PVDF, end flange

★, ‡, or ✖: See **ATEX Certifications** below.

Check Valve Seats		Check Valve Balls		Diaphragm		Manifold O-Rings	
AC	Acetal	**AC**	Acetal	**BN**	Buna-N	**—**	None
FK	FKM Fluoroelastomer	**BN**	Buna-N	**CO**	Polychloroprene Overmolded	**PT**	PTFE
PP	Polypropylene	**FK**	FKM Fluoroelastomer	**FK**	FKM Fluoroelastomer		
PV	PVDF	**PT**	PTFE	**PO**	PTFE/EPDM Overmolded		
SP	Santoprene®	**SP**	Santoprene	**PT**	PTFE/EPDM Two-Piece		
SS	316 Stainless Steel	**SS**	316 Stainless Steel	**SP**	Santoprene		
BN	Buna-N	**TP**	TPE	**TP**	TPE		
AL	Aluminum	**GE**	Geolast	**GE**	Geolast		
GE	Geolast	**CR**	Polychloroprene				
TP	TPE	**CW**	Polychloroprene w/SST Core				

ATEX Certifications

★ All Conductive Polypropylene 1050 pumps are certified: Ex II 2 G c IIC T4

✖ DataTrak and Pulse Count are certified: Ex II 2 G

EEx ia IIA T3
Nemko
06ATEX1124

Popular Models

Material	Part Number Standard Air Valve	Materials for Seats	Materials for Balls	Materials for Diaphragms	Air Valve Replacement Kit	Seat Kit	Ball Kit	Diaphragm Kit	Flange
Polypropylene	649001	Polypropylene	Santoprene	Santoprene	24B768	24B635	24B646	24B628	Center
	649006	Polypropylene	PTFE	PTFE/EPDM 2 Piece	24B768	24B635	24B645	24B627	Center
	649034	Polypropylene	PTFE	PTFE/EPDM 2 Piece	24B768	24B635	24B645	24B627	End
Conductive Polypropylene	649218	Acetal	PTFE	PTFE/EPDM 2 Piece	24B768	24B630	24B645	24B627	End
	649211	316 SST	PTFE	PTFE/EPDM 2 Piece	24B768	24B637	24B645	24B627	End
PVDF	649392	316 SST	PTFE	PTFE/EPDM 2 Piece	24B768	24B637	24B645	24B627	End
	649398	PVDF	PTFE	PTFE/EPDM 2 Piece	24B768	24C721	24B645	24B627	End

Technical Specifications

Husky 1050 Plastic Pumps	Conductive Polypropylene	Polypropylene	PVDF
Maximum fluid working pressure	125 psi (8.6 bar, 0.86 MPa)	125 psi (8.6 bar, 0.86 MPa)	125 psi (8.6 bar, 0.86 MPa)
Maximum free flow delivery	50 gpm (189 lpm)	50 gpm (189 lpm)	50 gpm (189 lpm)
Maximum pump speed	280 cpm	280 cpm	280 cpm
Displacement per cycle	0.17 gal (0.64 liters)	0.17 gal (0.64 liters)	0.17 gal (0.64 liters)
Maximum suction lift	16 ft (4.9 m) dry, 29 ft (8.8 m) wet	16 ft (4.9 m) dry, 29 ft (8.8 m) wet	16 ft (4.9 m) dry, 29 ft (8.8 m) wet
Maximum size pumpable solids	1/8 in (3.2 mm)	1/8 in (3.2 mm)	1/8 in (3.2 mm)
Sound Power* at 70 psi (4.8 bar, 0.48 MPa) and 50 cpm at 100 psi (7.0 bar, 0.7 MPa) and full flow	 78 dBa 90 dBa	 78 dBa 90 dBa	 78 dBa 90 dBa
Sound Pressure** at 70 psi (4.8 bar, 0.48 MPa) and 50 cpm at 100 psi (7.0 bar, 0.7 MPa) and full flow	 84 dBa 96 dBa	 84 dBa 96 dBa	 84 dBa 96 dBa
Maximum air consumption	67 scfm	67 scfm	67 scfm
Air consumption at 70 psi (4.8 bar, 0.48 MPa), 20 gpm (76 lpm)	25 scfm	25 scfm	25 scfm
Air pressure operating range	20-125 psi (1.4-8.6 bar, 0.14-0.86 MPa)	20-125 psi (1.4-8.6 bar, 0.14-0.86 MPa)	20-125 psi (1.4-8.6 bar, 0.14-0.86 MPa)
Air inlet size	1/2 npt(f)	1/2 npt(f)	1/2 npt(f)
Fluid inlet size	1 in raised face ANSI/DIN flange	1 in raised face ANSI/DIN flange	1 in raised face ANSI/DIN flange
Fluid outlet size	1 in raised face ANSI/DIN flange	1 in raised face ANSI/DIN flange	1 in raised face ANSI/DIN flange
Weight	18 lb (8.2 kg)	18 lb (8.2 kg)	26 lb (11.8 kg)
Wetted parts	polypropylene and material(s) chosen for seat, ball, and diaphragm options	polypropylene and material(s) chosen for seat, ball, and diaphragm options	PVDF and material(s) chosen for seat, ball, and diaphragm options
Non-wetted Parts Center Bolts	 polypropylene stainless steel	 polypropylene stainless steel	 polypropylene stainless steel
Instruction manual	312877	312877	312877
Repair/parts manual	313435	313435	313435

** Sound power measured per ISO-9614-2.*
*** Sound pressure was tested 3.28 ft (1 m) from equipment.*

Husky 1050 Plastic Pumps

Performance Charts

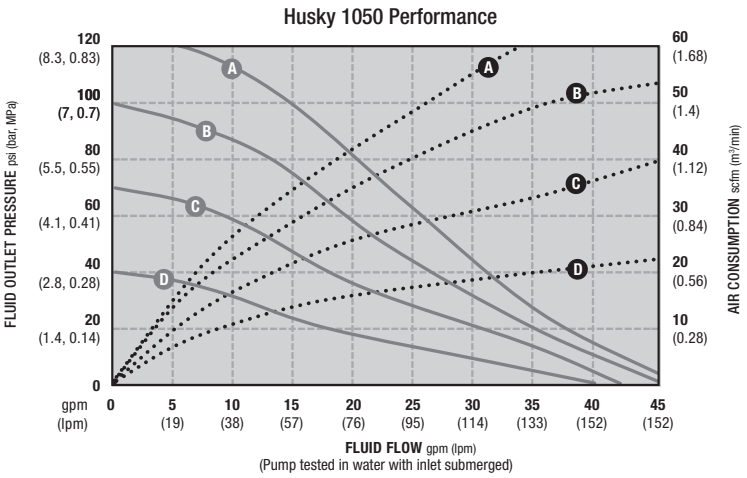

AIR PRESSURE	LEGEND
(A) = at 125 psi (8.3 bar, 0.83 MPa)	Air Consumption •••••
(B) = at 100 psi (7 bar, 0.7 MPa)	Fluid Pressure ———
(C) = at 70 psi (4.8 bar, 0.48 MPa)	
(D) = at 40 psi (2.8 bar, 0.28 MPa)	

Mounting Pattern

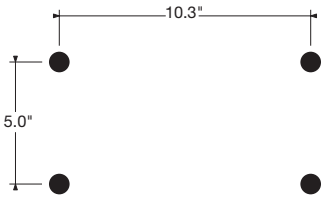

Dimensions

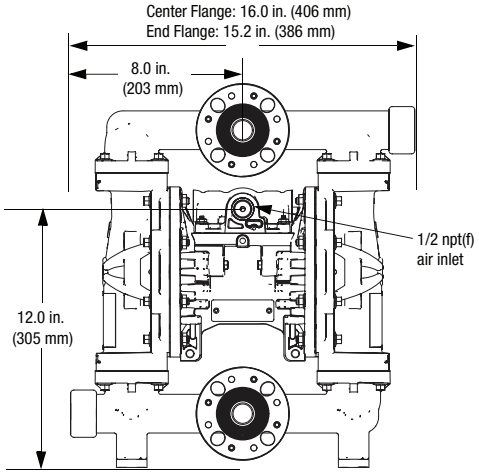

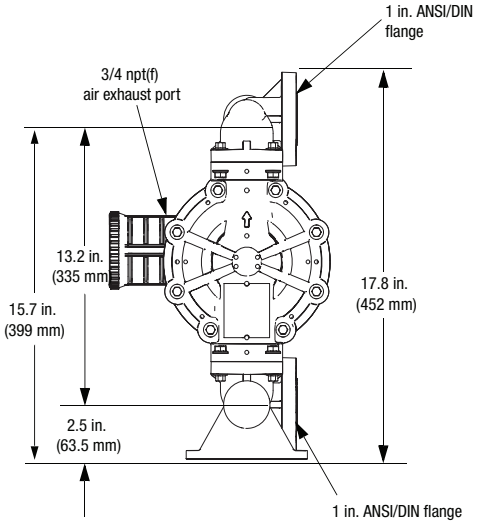

Typical System Drawings

Husky 1050 Floor-Mount

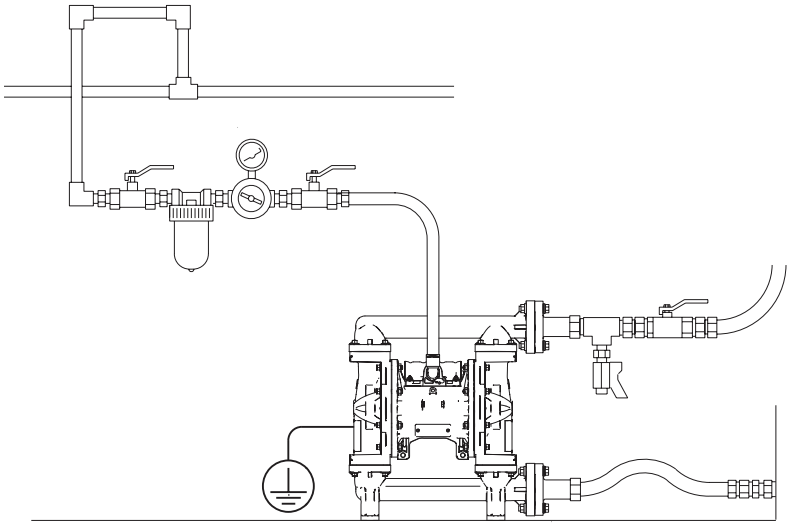

Husky 1050 Selector Tool

To order a Husky 1050, use the online selector tool at **www.graco.com/pumpselectors** or contact your distributor.

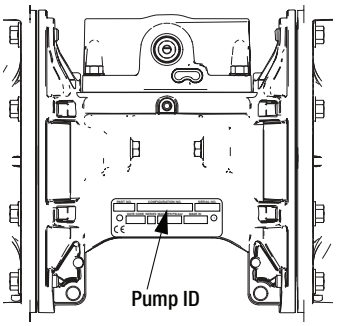

NOTE: Options for seats, check balls, diaphragms, and seals vary for the 1050A, 1050H, and 1050S pump models.

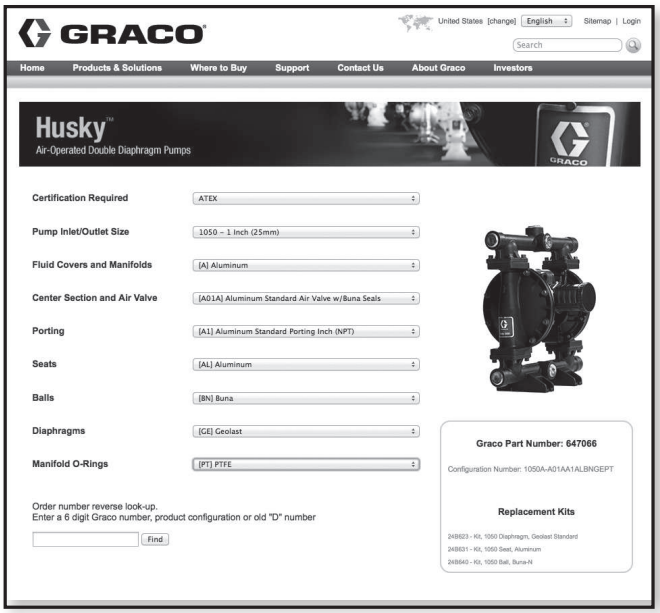

Example of Product Selector Tool on www.graco.com/pumpselectors.

Pump Configuration Options

Pump (1 inch ports, 50 gpm)	Center Section and Air Valve Material		Air Valve/Monitoring	Fluid Covers and Manifolds	
A ★ Aluminum 1050	Aluminum	**A01**	Standard	**A1**	Aluminum, standard ports, NPT
		A01B	Pulse Count ✖	**A2**	Aluminum, standard ports, BSPT
S ‡ Stainless Steel 1050		**A01C**	DataTrak ✖	**S1**	Stainless steel, standard ports, NPT
		A01D	Remote	**S2**	Stainless steel, standard ports, BSPT
H Hastelloy 1050		**A01E**	Standard	**H1**	Hastelloy, standard ports, NPT
		AC1A	Natural Gas	**H2**	Hastelloy, standard ports, BSPT
	Conductive Polypropylene	**C01A**	Standard		
		C01B	Pulse Count ✖		
		C01C	DataTrak ✖		
		C01D	Remote		
	Polypropylene	**P01A**	Standard		
		P01B	Pulse Count ✖		
		P01C	DataTrak ✖		
		P01D	Remote		

★, ‡, or ✖: See **ATEX Certifications** below.

Check Valve Seats		Check Valve Balls		Diaphragm		Manifold O-Rings	
AC	Acetal	**AC**	Acetal	**BN**	Buna-N	**—**	None
AL	Aluminum	**BN**	Buna-N	**CO**	Polychloroprene Overmolded	**PT**	PTFE
BN	Buna-N	**CR**	Polychloroprene Standard	**FK**	FKM Fluoroelastomer		
FK	FKM Fluoroelastomer	**CW**	Polychloroprene Weighted	**GE**	Geolast		
GE	Geolast®	**FK**	FKM Fluoroelastomer	**PO**	PTFE/EPDM Overmolded		
PP	Polypropylene	**GE**	Geolast	**PT**	PTFE/EPDM Two-Piece		
SP	Santoprene®	**PT**	PTFE	**SP**	Santoprene		
SS	316 Stainless Steel	**SP**	Santoprene	**TP**	TPE		
TP	TPE	**SS**	316 Stainless Steel				
PV	PVDF	**TP**	TPE				

ATEX Certifications

★ All Aluminum 1050 pumps are certified:

Ex II 2 G c IIC T4

‡ Stainless Steel pumps with aluminum or conductive polypropylene centers are certified:

Ex II 2 G c IIC T4

✖ DataTrak and Pulse Count are certified:

Ex II 2 G

EEx ia IIA T3
Nemko
06ATEX1124

Intertek
9902471

CONFORMS TO
CSA/AM ANSI STD LC 6
CERTIFIED TO
CSA STD T.I.L. NO. R-14
GRACO INC.
P.O. Box 1441 Mpls, MN
55440 U.S.A.

Husky 1050 Metal Pumps

Popular Models

Material	Part Number: Standard Air Valve	Part Number: Remote Air Valve	Outlet Orientation	Porting	Materials for Seats	Materials for Balls	Materials for Diaphragms	Air Valve Replacement Kit	Seat Kit	Ball Kit	Diaphragm Kit
Aluminum	647666	647502	Multi Port	NPT	Thermoplastic Polyester Elastomer	Acetal	Thermoplastic Polyester Elastomer	24B766	24B634	24B639	24B624
	647075	647561	Multi Port	NPT	Acetal	PTFE	PTFE/EPDM 2 Piece	24B766	24B630	24B645	24B627
	647040	647526	Multi Port	NPT	Geolast	Geolast	Geolast	24B766	24B633	24B641	24B623
	647035	647521	Multi Port	NPT	Santoprene	Santoprene	Santoprene	24B766	24B636	24B646	24B628
	647028	647514	Multi Port	NPT	316 SST	PTFE	PTFE/EPDM 2 Piece	24B766	24B637	24B645	24B627
	647004	647490	Multi Port	NPT	Polypropylene	PTFE	PTFE/EPDM 2 Piece	24B766	24B635	24B645	24B627
	647018	647504	Multi Port	NPT	316 SST	316 SST	PTFE/EPDM 2 Piece	24B766	24B637	24B647	24B627
	647043*		Multi Port	NPT	Buna-N	Buna-N	Buna-N	25C296	24B638	34B648	24B629
	647124*		Multi Port	BSPT	Buna-N	Buna-N	Buna-N	25C296	24B638	24B648	24B629
	647047*		Multi Port	NPT	FKM	FKM	FKM	25C296	24B630	24B640	24B622
	647128*		Multi Port	BSPT	FKM	FKM	FKM	25C296	24B632	24B640	24B622
Stainless Steel	651009	651125	Multi Port	NPT	316 SST	PTFE	PTFE/EPDM 2 Piece	24B766	24B637	24B645	24B627
Stainless Steel Flange Models	651506**		Center/ Horizontal	Flange	316 SST	PTFE	PTFE	27B768	24B637	24B647	24B627
	651531**		Center/ Vertical	Flange	316 SST	PTFE	PTFE	24B768	24B637	24B647	24B627
	651508**		Center/ Horizontal	Flange	316 SST	Santoprene	PTFE	24B768	24B637	24B647	24B628
	651533**		Center/ Vertical	Flange	316	Santoprene	PTFE	24B768	24B637	24B647	24B628
Hastelloy	651440		End	NPT	FKM	PTFE	PTFE/EPDM 2 Piece	24B768	24B638	24B645	24B627

**Aluminum body with Natural Gas operation capabilities.*

***All stainless steel flange models have a fixed center inlet.*

Typical System Drawings

Husky 1050 Floor-Mount

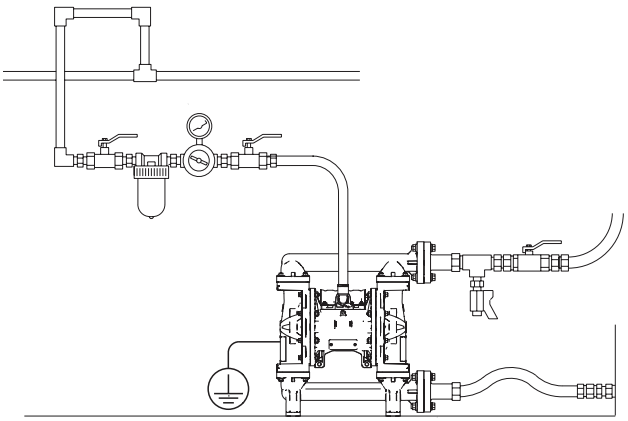

Performance Charts

Husky 1050 Performance

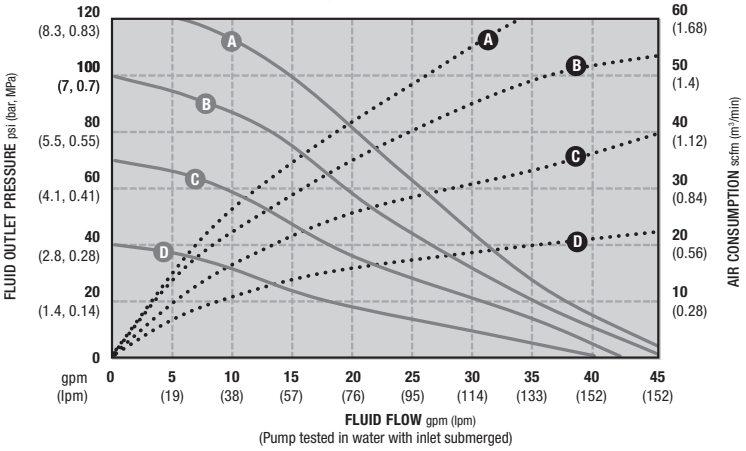

(Pump tested in water with inlet submerged)

AIR PRESSURE	LEGEND
(A) = at 125 psi (8.3 bar, 0.83 MPa)	Air Consumption •••••
(B) = at 100 psi (7 bar, 0.7 MPa)	Fluid Pressure ———
(C) = at 70 psi (4.8 bar, 0.48 MPa)	
(D) = at 40 psi (2.8 bar, 0.28 MPa)	

Technical Specifications

Husky 1050 Metal Pumps	Aluminum	Stainless Steel	Hastelloy
Maximum fluid working pressure	125 psi (8.6 bar, 0.86 MPa)	125 psi (8.6 bar, 0.86 MPa)	125 psi (8.6 bar, 0.86 MPa)
Natural gas operated pump models	120 psi (8.3 bar, 0.83 MPa)		
Maximum free flow delivery	50 gpm (189 lpm)	50 gpm (189 lpm)	50 gpm (189 lpm)
Natural gas operated pump models	49 gpm (185 lpm)	n/a	n/a
Maximum pump speed	280 cpm	280 cpm	280 cpm
Natural gas operated pump models	275 cpm	n/a	n/a
Displacement per cycle	0.17 gal (0.64 liters)	0.17 gal (0.64 liters)	0.17 gal (0.64 liters)
Maximum suction lift	16 ft (4.9 m) dry, 29 ft (8.8 m) wet	16 ft (4.9 m) dry, 29 ft (8.8 m) wet	16 ft (4.9 m) dry, 29 ft (8.8 m) wet
Maximum size pumpable solids	1/8 in (3.2 mm)	1/8 in (3.2 mm)	1/8 in (3.2 mm)
Sound Power* at 70 psi (4.8 bar, 0.48 MPa) and 50 cpm at 100 psi (7.0 bar, 0.7 MPa) and full flow	 78 dBa 90 dBa	 78 dBa 90 dBa	 78 dBa 90 dBa
Sound Pressure** at 70 psi (4.8 bar, 0.48 MPa) and 50 cpm at 100 psi (7.0 bar, 0.7 MPa) and full flow	 84 dBa 96 dBa	 84 dBa 96 dBa	 84 dBa 96 dBa
Maximum air consumption	67 scfm	67 scfm	67 scfm
Maximum gas consumtion	67 scfm	n/a	n/a
Air consumption at 70 psi (4.8 bar, 0.48 MPa),20 gpm (76 lpm)	25 scfm	25 scfm	25 scfm
Natural gas consumption at 70 psi (4.8 bar, 0.48 MPa),20 gpm (76 lpm)	25 scfm	n/a	n/a
Air pressure operating range	20-125 psi (1.4-8.6 bar, 0.14-0.86 MPa)	20-125 psi (1.4-8.6 bar, 0.14-0.86 MPa)	20-125 psi (1.4-8.6 bar, 0.14-0.86 MPa)
Gas pressure operating range	20-120 psi (1.4-8.3 bar, 0.14-0.83 MPa)	n/a	n/a
Air inlet size	1/2 npt(f)	1/2 npt(f)	1/2 npt(f)
Gas inlet size	1/2 npt(f)	n/a	n/a
Fluid inlet size	1 in npt(f) or 1 in bspt	1 in npt(f) or 1 in bspt	1 in npt(f) or 1 in bspt
Fluid outlet size	1 in npt(f) or 1 in bspt	1 in npt(f) or 1 in bspt	1 in npt(f) or 1 in bspt
Weight	23 lb (10.5 kg)	with conductive polypropylene center 36.3 lb (16.5 kg) with polypropylene center 37.3 lb (16.9 kg) with aluminum center 41.4 lb (18.8 kg)	41 lb (18.6 kg)
Wetted parts	aluminum and material(s) chosen for seat, ball, and diaphragm options	stainless steel and material(s) chosen for seat, ball, and diaphragm options	hastelloy, stainless steel and material(s) chosen for seat, ball, and diaphragm options
Non-wetted Parts Center Bolts	 aluminum coated carbon steel	 polypropylene stainless steel	 aluminum stainless steel	 polypropylene stainless steel
Instruction manual	312877	312877	312877
Natural gas instruction manual	313598	n/a	n/a
Repair/parts manual	313435	313435	313435
Natural gas repair/parts manual	313435	n/a	n/a

** Sound power measured per ISO-9614-2. ** Sound pressure was tested 3.28 ft (1 m) from equipment.*

Aluminum Standard Porting

Stainless Steel Standard Porting

Hastelloy Standard Porting

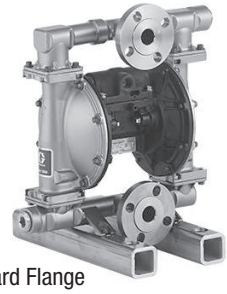

Stainless Steel Forward Flange

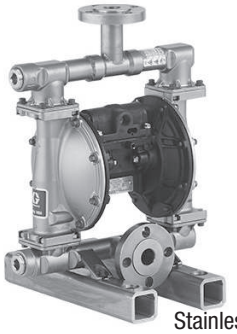

Stainless Steel Vertical Flange

Husky 1050 Metal Pumps

Dimensions

Aluminum

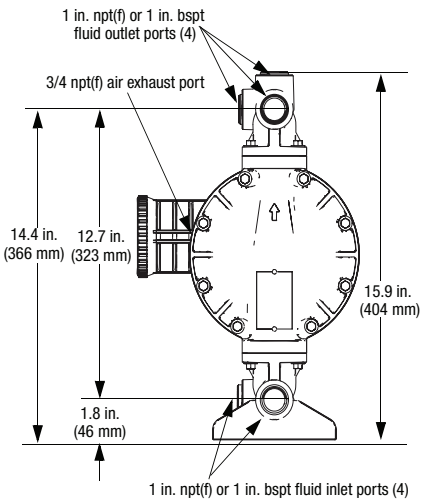

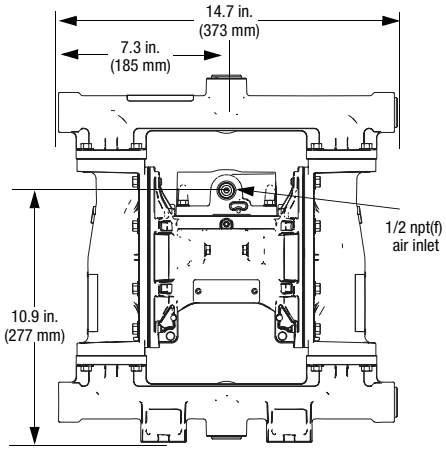

Mounting Pattern

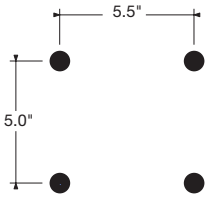

Stainless Steel and Hastelloy

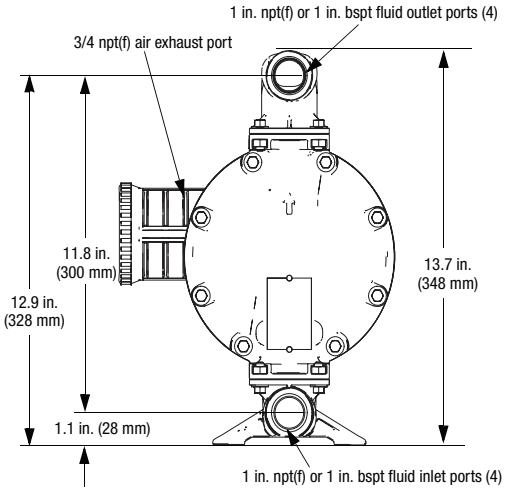

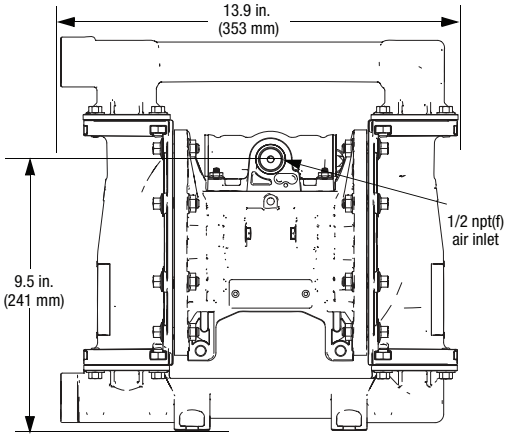

Mounting Pattern

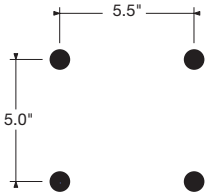

Husky 1050HP Selector Tool

To order a Husky 1050HP, use the online selector tool at **www.graco.com/pumpselectors** or contact your distributor.

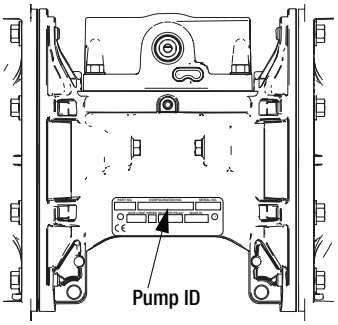

NOTE: Options for seats, check balls, diaphragms, and seals vary for pump models.

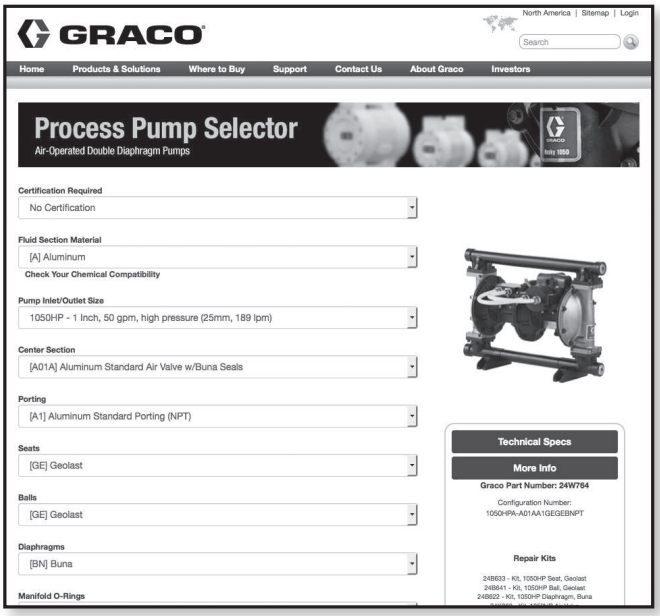

Example of Product Selector Tool on www.graco.com/pumpselectors.

Pump Configuration Options

Pump	Center Section and Air Valve Material		Air Valve	Manifolds	
1050HP Aluminum	Aluminum	A01A	Standard	A1 A2 S1 S2	Aluminum, Standard Ports, NPT Aluminum, Standard Ports, BSPT Stainless Steel, Standard Ports, NPT Stainless Steel, Standard Ports, BSPT

Check Valve Seats		Check Valve Balls		Diaphragm Material		Manifold O-Rings	
SS	316 Stainless Steel	CW	Santoprene	BN	Santoprene	PT	PTFE
SP	Santoprene	GE	Geolast	CO	Polychloroprene Overmolded		
GE	Geolast	SP	Santoprene	PT	PTFE/Santoprene Two-Piece		
		SS	316 Stainless Steel	SP	Santoprene		

Husky 1050HP Metal Pumps

Popular Models

Part No.	Seat	Ball	Fluid Diaphragm	Center Diaphragm	Fluid Covers	Fluid Manifold	Porting
24W756	Stainless Steel	Santoprene	Santoprene	Santoprene	Stainless Steel	Aluminum	NPT
24W757	Stainless Steel	Santoprene	Santoprene	Santoprene	Stainless Steel	Aluminum	BSPT
24W758	Stainless Steel	Santoprene	Santoprene	Santoprene	Stainless Steel	Stainless Steel	NPT
24W759	Stainless Steel	Santoprene	Santoprene	Santoprene	Stainless Steel	Stainless Steel	BSPT
24W762	Santoprene	Santoprene	Santoprene	Santoprene	Stainless Steel	Aluminum	NPT
24W763	Santoprene	Santoprene	Santoprene	Santoprene	Stainless Steel	Aluminum	BSPT
24W764	Geolast	Geolast	Buna-N	Santoprene	Stainless Steel	Aluminum	NPT
24W765	Geolast	Geolast	Buna-N	Santoprene	Stainless Steel	Aluminum	BSPT
24W766	Stainless Steel	Weighted Neoprene	Buna-N	Santoprene	Stainless Steel	Aluminum	NPT
24W767	Stainless Steel	Weighted Neoprene	Buna-N	Santoprene	Stainless Steel	Aluminum	BSPT
24W768	Stainless Steel	Weighted Neoprene	Neoprene Overmold	Santoprene	Stainless Steel	Aluminum	NPT
24W769	Stainless Steel	Weighted Neoprene	Neoprene Overmold	Santoprene	Stainless Steel	Aluminum	BSPT
24X388	Stainless Steel	Stainless Steel	2-piece PTFE/Santoprene	Santoprene	Stainless Steel	Stainless Steel	NPT
24X389	Stainless Steel	Stainless Steel	2-piece PTFE/Santoprene	Santoprene	Stainless Steel	Stainless Steel	BSPT

Technical Specifications

Maximum fluid working pressure . . . . . 250 psi (14 bar, 1.4 MPa)
Air pressure operating range . . . . . 20-125 psi (1.4-6.9 bar, 0.14-0.69 MPa)
Fluid displacement per cycle
- Low Pressure Setting . . . . . 0.17 gal (0.64 l)
- High Pressure Setting . . . . . 0.20 gal (0.76 l)

Air consumption at 70 psi (4.8 bar), 20 gpm (76 lpm)
- Low Pressure Setting . . . . . 26 scfm (0.7 m3/min)
- High Pressure Setting . . . . . 51 scfm (1.4 m3/min)

Maximum values with water as media under submerged inlet conditions at ambient temperature:
- Maximum air consumption
  - Low Pressure Setting . . . . . 59 scfm (1.7 m3/min)
  - High Pressure Setting . . . . . 95 scfm (2.7 m3/min)
- Maximum free-flow delivery
  - Low Pressure Setting . . . . . 50 gpm (189 lpm)
  - High Pressure Setting . . . . . 46 gpm (174 lpm)
- Maximum pump speed
  - Low Pressure Setting . . . . . 280 cpm
  - High Pressure Setting . . . . . 225 cpm

Maximum suction lift*
- Dry . . . . . 16 ft (4.9 m)
- Wet . . . . . 29 ft (8.8 m)

Maximum size pumpable solids . . . . . 1/8 in (3.2 mm)
Recommended cycle rate for continuous use . . . . . 93–140 cpm (in Low or High setting)
Air inlet size . . . . . 3/4 npt(f)
Fluid inlet size . . . . . 1 in npt(f) or bspt
Fluid outlet size . . . . . 1 in npt(f) or bspt
Weight
- Aluminum manifolds . . . . . 48 lb (21.8 kg)
- SST manifolds . . . . . 60 lb (27.2 kg)

Wetted parts . . . . . aluminum or stainless steel plus the material(s) chosen for seat, ball, and diaphragm options
Non-wetted external parts . . . . . aluminum, coated carbon steel, sst

**Varies based on ball/seat selection and wear, operating speed, material properties, and other variables*

Performance Charts

Low Pressure Setting

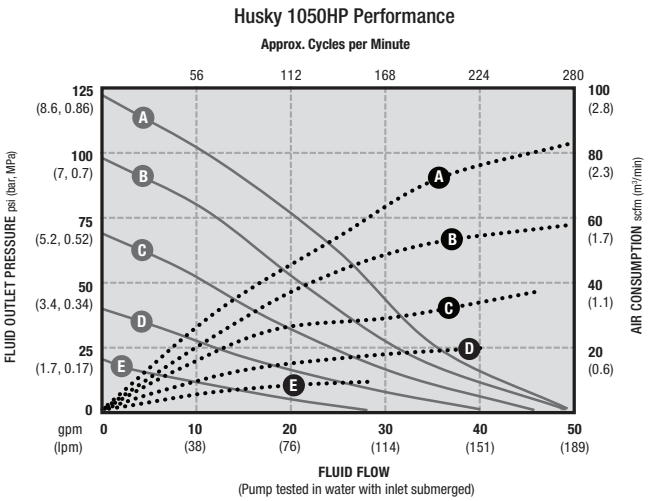

AIR PRESSURE	LEGEND
(A) = at 125 psi (8.3 bar, 0.83 MPa)	Air Consumption •••••
(B) = at 100 psi (7 bar, 0.7 MPa)	Fluid Pressure ———
(C) = at 70 psi (4.8 bar, 0.48 MPa)	
(D) = at 40 psi (2.8 bar, 0.28 MPa)	

High Pressure Setting

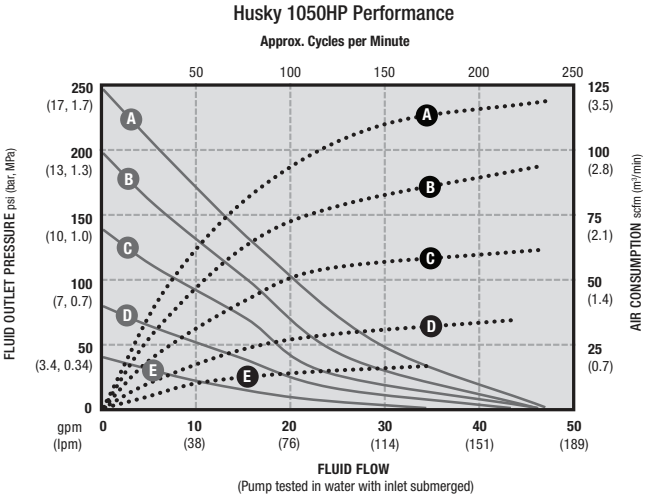

AIR PRESSURE	LEGEND
(A) = at 125 psi (8.3 bar, 0.83 MPa)	Air Consumption •••••
(B) = at 100 psi (7 bar, 0.7 MPa)	Fluid Pressure ———
(C) = at 70 psi (4.8 bar, 0.48 MPa)	
(D) = at 40 psi (2.8 bar, 0.28 MPa)	

Husky 1050HP Metal Pumps

Dimensions

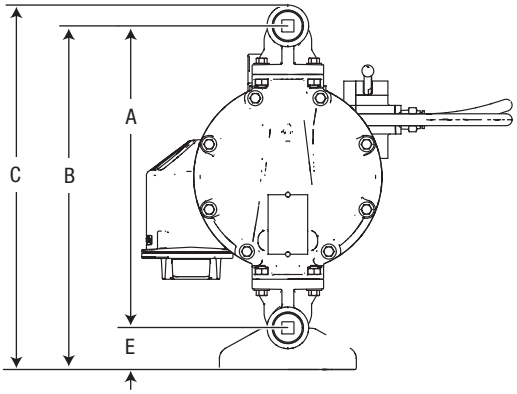

Key	Aluminum	SST
A	12.7 in (323 mm)	11.8 in (300 mm)
B	14.4 in (366 mm)	12.9 in (328 mm)
C	15.3 in (389 mm)	13.7 in (348 mm)
D	10.9 in (277 mm)	9.5 in (241 mm)
E	1.8 in (46 mm)	1.1 in (28 mm)
F	10.8 in (274 mm)	10.7 in (272 mm)
G	21.5 in (546 mm)	20.6 in (523 mm)

All dimensions are approximate

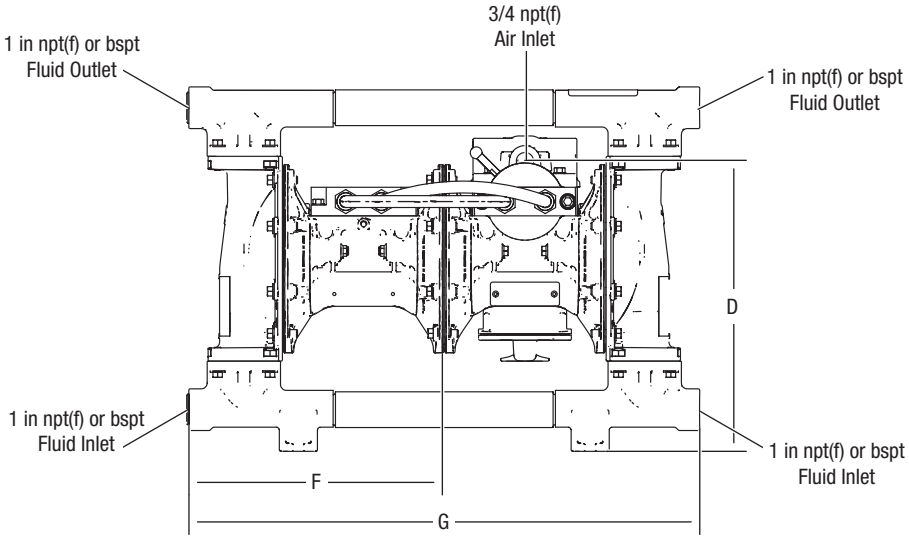

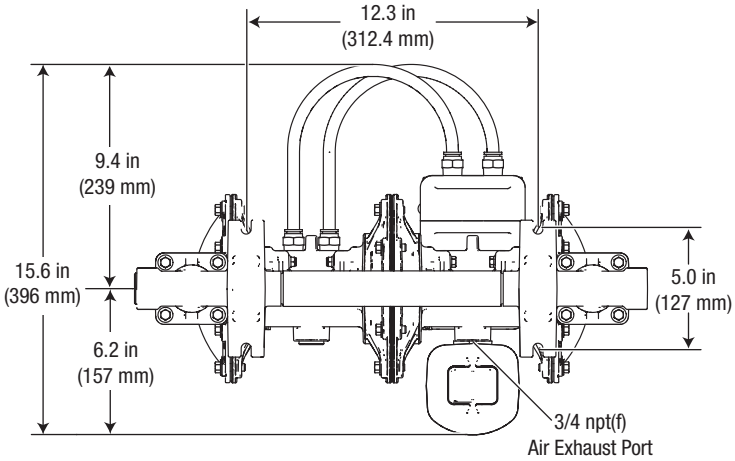

Husky 1590 Selector Tool

To order a Husky 1590, use the online selector tool at **www.graco.com/pumpselectors** or contact your distributor.

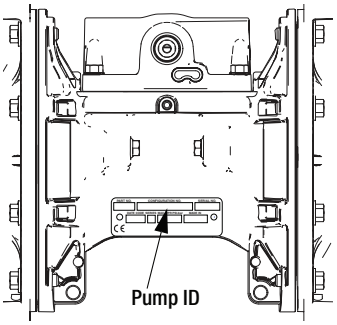

NOTE: Check the identification plate (ID) for the Configuration Number of your pump. Use the following matrix to define the components of your pump.

Example of Product Selector Tool on www.graco.com/pumpselectors.

Pump Configuration Options

Pump (1.5 inch ports, 90 gpm)	Center Section and Air Valve Material		Air Valve/Monitoring	Fluid Covers and Manifolds	
P Polypropylene 1590	Aluminum	**A01A**	Standard w/Buna-N Seals	**F2**	PVDF, end flange
		A01D	Remote w/ Buna-N Seals		
F PVDF 1590	Stainless Steel	**S01A**	Standard	**P2**	Polypropylene, end flange
		S01D	Remote		

Check Valve Seats		Check Valve Balls		Diaphragm		Manifold O-Rings	
BN	Buna-N	**AC**	Acetal	**BN**	Buna-N	**—**	None
FK	Fluoroelastomer	**BN**	Buna-N	**FK**	Fluoroelastomer	**PT**	PTFE
GE	Geolast	**FK**	Fluoroelastomer	**GE**	Geolast		
PP	Polypropylene	**GE**	Geolast	**PT**	PTFE/EPDM Two-Piece		
PV	PVDF	**PT**	PTFE	**PO**	PTFE Overmolded		
SA	17-4 Stainless Steel	**SD**	440C Stainless Steel	**SP**	Santoprene		
SP	Santoprene	**SP**	Santoprene	**TP**	TPE		
SS	316 Stainless Steel	**TP**	TPE				
TP	TPE						

Husky 1590 Plastic Pumps

Ordering Information

D	X	X	X	X	X
Diaphragm Pump	Pump Size	Wetted Parts	Seats	Balls/ Checks	Diaphragms

PUMP SIZE (AIR MOTOR TYPE AND MATERIAL)	WETTED PARTS	SEATS	BALLS	DIAPHRAGM
B = 1-1/2" (38.1 mm) Standard: aluminum center section	2 = Poly (flange)	3 = Stainless Steel	1 = PTFE	1 = PTFE
C = 1-1/2" (38.1 mm) Remote: aluminum center section	5 = PVDF (flange)	4 = Hardened SST	2 = Acetal	5 = TPE
T = 1-1/2" (38.1 mm) Standard: stainless steel center section		5 = TPE	4 = Hardened SST	6 = Santoprene
U = 1-1/2" (38.1 mm) Remote: stainless steel center section		6 = Santoprene	5 = TPE	7 = Buna N
		7 = Buna N	6 = Santoprene	8 = Fluoroelastomer
		8 = Fluoroelastomer	7 = Buna N	G = Geolast
		9 = Polypropylene	8 = Fluoroelastomer	
		A = PVDF	G = Geolast	
		G = Geolast		

Popular Models

Material	Part Number (ANSI-Flange)		Part Number (BSP Ported)		Materials for Seats	Materials for Balls	Materials for Diaphragms	Fluid Kit	Air Kit	Air Control**
	Standard Air Valve	Remote* Air Valve	Standard Air Valve	Remote* Air Valve						
Standard Pumps with Aluminum Center Section										
Polypropylene	DB2311				Stainless Steel	PTFE	PTFE	D0C311	236273	246947
	DB2377	DC2377			Stainless Steel	Buna-N	Buna-N	D0C377	236273	246947
	DB2777	DC2777			Buna	Buna-N	Buna-N	D0C777	236273	246947
	DB2888	DC2888			Fluoroelastomer	Fluoroelastomer	Fluoroelastomer	D0C888	236273	246947
	DB2911	DC2911			Polypropylene	PTFE	PTFE	D0C911	236273	246947
	DB2955				Polypropylene	TPE	TPE	D0C955	236273	246947
	DB2966				Polypropylene	Santoprene	Santoprene	D0C966	236273	246947
	DB2977				Polypropylene	Buna-N	Buna-N	D0C977	236273	246947
	DB2988				Polypropylene	Fluoroelastomer	Fluoroelastomer	D0C988	236273	246947
	DB29GG	DC29GG			Polypropylene	Geolast	Geolast	D0C9GG	236273	246947
PVDF	DB5311				Stainless Steel	PTFE	PTFE	D0C311	236273	246947
	DB5666				Santoprene	Santoprene	Santoprene	D0C666	236273	246947
	DB5811	DC5911			Fluoroelastomer	PTFE	PTFE	D0C811	236273	246947
	DB5888	DC5888			Fluoroelastomer	Fluoroelastomer	Fluoroelastomer	D0C888	236273	246947
	DB5A11	DC5A11			PVDF	PTFE	PTFE	D0CA11	236273	246947
	DB5A88				PVDF	Fluoroelastomer	Fluoroelastomer	D0CA88	236273	246947

**Requires CycleFlo or external valve control*

*** Air control includes air regulator and filter with gauge*

Technical Specifications

Husky 1590 Plastic Pumps	Polypropylene	PVDF
Maximum fluid working pressure	120 psi (8.4 bar, 0.84 MPa)	120 psi (8.4 bar, 0.84 MPa)
Maximum free flow delivery*	100 gpm (378.5 lpm)	100 gpm (378.5 lpm)
Maximum pump speed	200 cpm	200 cpm
Displacement per cycle**	0.5 gallon (1.96 liter)	0.5 gallon (1.96 liter)
Maximum suction lift (DB2366)	20 ft (6.1 m) dry	20 ft (6.1 m) dry
Maximum size pumpable solids	0.19 in (4.8 mm)	0.19 in (4.8 mm)
Maximum operating temperature***	150°F (65.5°C)	150°F (65.5°C)
Maximum diaphragm operating temperature***		
PTFE	220°F (104.4°C)	220°F (104.4°C)
Santoprene	180°F (82.2°C)	180°F (82.2°C)
Buna-N	180°F (82.2°C)	180°F (82.2°C)
TPE	150°F (65.5°C)	150°F (65.5°C)
Fluoroelastomer	250°F (121.1°C)	250°F (121.1°C)
Geolast	150°F (65.5°C)	150°F (65.5°C)
Typical sound level at 70 psi (4.9 bar, 0.49 MPa) air @ 125 cpm	77 dBa	77 dBa
Maximum air consumption	125 scfm (3.5 m3/min.)	125 scfm (3.5 m3/min.)
Air pressure operating range	20 to 120 psi (1.4 to 8.4 bar, 0.14 to 0.84 MPa)	20 to 120 psi (1.4 to 8.4 bar, 0.14 to 0.84 MPa)
Air inlet size	1/2 npt(f)	1/2 npt(f)
Fluid inlet & outlet size****	1-1/2 in (38.1 mm) ANSI-flange	1-1/2 in (38.1 mm) ANSI-flange
Weight	35 lb (16 kg)	49 lb (22 kg)
Weight with stainless steel center section	48.3 lb (21.9 kg)	62.3 lb (28.2 kg)
Instruction manual	308549	308549

** Flow rates are with muffler and do not vary based on diaphragm material*
*** Displacement per cycle may vary based on suction condition, discharge head, air pressure and fluid type*
**** Actual pump performance may be affected by prolonged usage at temperature*

Husky 1590 Plastic Pumps

Performance Charts

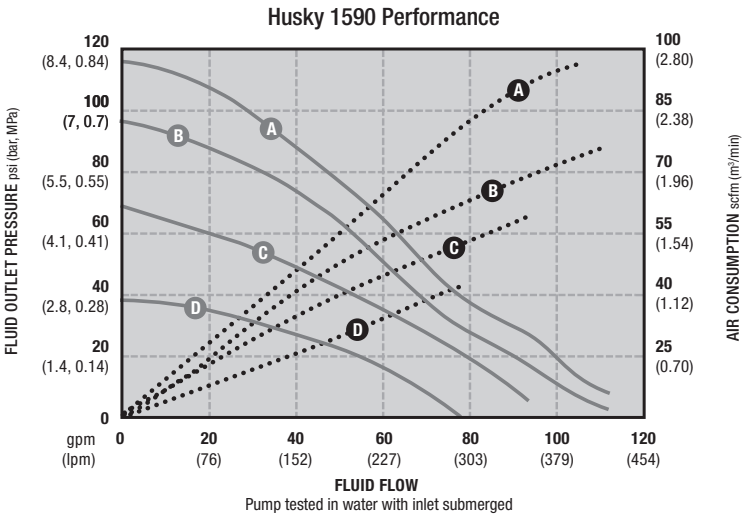

AIR PRESSURE	LEGEND
(A) = at 120 psi (8.4 bar, 0.84 MPa)	Air Consumption • • • • • •
(B) = at 100 psi (7 bar, 0.7 MPa)	Fluid Pressure ———
(C) = at 70 psi (4.8 bar, 0.48 MPa)	
(D) = at 40 psi (2.8 bar, 0.28 MPa)	

Dimensions

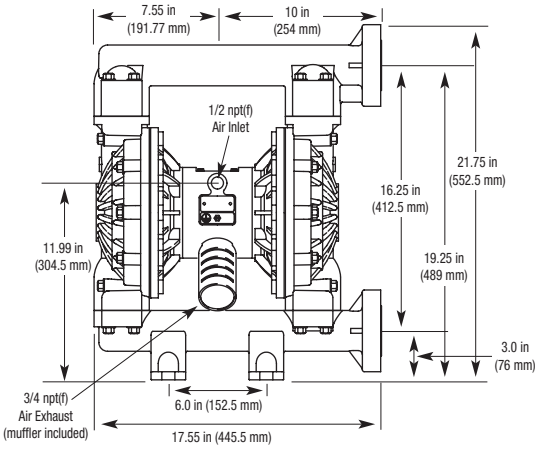

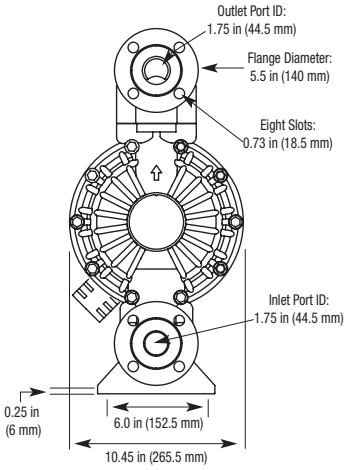

Typical System Drawings

Husky 1590 Above Ground Gravity Feed

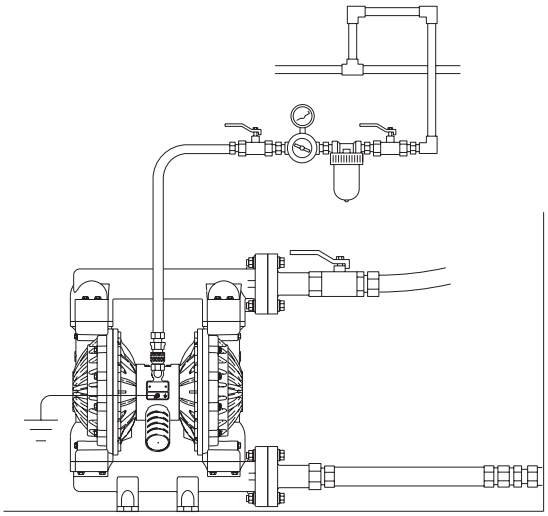

Husky 1590 Selector Tool

To order a Husky 1590, use the online selector tool at **www.graco.com/pumpselectors** or contact your distributor.

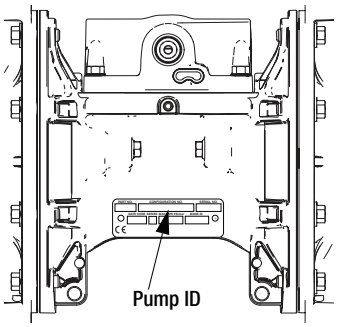

NOTE: Check the identification plate (ID) for the Configuration Number of your pump. Use the following matrix to define the components of your pump.

Example of Product Selector Tool on www.graco.com/pumpselectors.

Pump Configuration Options

Pump (1.5 inch ports, 90 gpm)	Center Section and Air Valve Material		Air Valve/Monitoring	Fluid Covers and Manifolds	
A ★ Aluminum 1590	Aluminum	**A01A**	Standard	**A1**	Aluminum, standard ports, NPT
		A01D	Remote	**A2**	Aluminum, standard ports, BSPT
		A01E	Standard	**S1**	Stainless steel, standard ports, NPT
S ‡ Stainless Steel 1590	Stainless Steel	**S01A**	Standard	**S2**	Stainless steel, standard ports, BSPT
		S01D	Remote		

★, ‡, or ✖: See **ATEX Certifications** below.

Check Valve Seats		Check Valve Balls		Diaphragm		Manifold O-Rings	
BN	Buna-N	**AC**	Acetal	**BN**	Buna-N	**—**	None
FK	Fluoroelastomer	**BN**	Buna-N	**FK**	Fluoroelastomer	**PT**	PTFE
GE	Geolast	**FK**	Fluoroelastomer	**GE**	Geolast		
PP	Polypropylene	**GE**	Geolast	**PT**	PTFE/EPDM Two-Piece		
PV	PVDF	**PT**	PTFE	**SP**	Santoprene		
SA	17-4 Stainless Steel	**SD**	440C Stainless Steel	**TP**	TPE		
SP	Santoprene	**SP**	Santoprene				
SS	316 Stainless Steel	**TP**	TPE				
TP	TPE						

ATEX Certifications

★ All Aluminum 1590 pumps are certified:

Ex II 2 G c IIC T4

‡ Stainless Steel pumps with aluminum or conductive polypropylene centers are certified:

Ex II 2 G c IIC T4

✖ DataTrak and Pulse Count are certified:

Ex II 2 G

EEx ia IIA T3
Nemko
06ATEX1124

Husky 1590 Metal Pumps

Ordering Information

D	X	X	X	X	X
Diaphragm Pump	Pump Size	Wetted Parts	Seats	Balls/ Checks	Diaphragms

PUMP SIZE (AIR MOTOR TYPE AND MATERIAL)	WETTED PARTS	SEATS	BALLS	DIAPHRAGM
B = 1-1/2" (38.1 mm) Standard: aluminum center section	3 = Aluminum (npt)	3 = Stainless Steel	1 = PTFE	1 = PTFE
C = 1-1/2" (38.1 mm) Remote: aluminum center section	4 = Stainless Steel (npt)	4 = Hardened SST	2 = Acetal	5 = TPE
T = 1-1/2" (38.1 mm) Standard: stainless steel center section	C = Aluminum (bspt)	5 = TPE	4 = Hardened SST	6 = Santoprene
U = 1-1/2" (38.1 mm) Remote: stainless steel center section	D = Stainless Steel (bspt)	6 = Santoprene	5 = TPE	7 = Buna-N
		7 = Buna-N	6 = Santoprene	8 = Fluoroelastomer
		8 = Fluoroelastomer	7 = Buna-N	G = Geolast
		9 = Polypropylene	8 = Fluoroelastomer	
		A = PVDF	G = Geolast	
		G = Geolast		

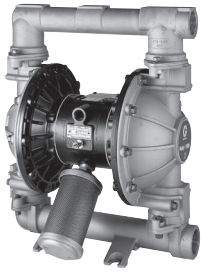

Technical Specifications

Husky 1590 Metal Pumps	Aluminum	Stainless Steel
Maximum fluid working pressure	120 psi (8.4 bar, 0.84 MPa)	120 psi (8.4 bar, 0.84 MPa)
Maximum free flow delivery*	100 gpm (378.5 lpm)	100 gpm (378.5 lpm)
Maximum pump speed	200 cpm	200 cpm
Displacement per cycle**	0.5 gallon (1.96 liter)	0.5 gallon (1.96 liter)
Maximum suction lift (DB2366)	20 ft (6.1 m) dry	20 ft (6.1 m) dry
Maximum size pumpable solids	0.19 in (4.8 mm)	0.19 in (4.8 mm)
Maximum operating temperature***	150°F (65.5°C)	150°F (65.5°C)
Maximum diaphragm operating temperature***		
PTFE	220°F (104.4°C)	220°F (104.4°C)
Santoprene	180°F (82.2°C)	180°F (82.2°C)
Buna-N	180°F (82.2°C)	180°F (82.2°C)
TPE	150°F (65.5°C)	150°F (65.5°C)
Fluoroelastomer	250°F (121.1°C)	250°F (121.1°C)
Geolast	150°F (65.5°C)	150°F (65.5°C)
Typical sound level at 70 psi (4.9 bar, 0.49 MPa) air @ 125 cpm	77 dBa	77 dBa
Maximum air consumption	125 scfm (3.5 m3/min.)	125 scfm (3.5 m3/min.)
Air pressure operating range	20 to 120 psi (1.4 to 8.4 bar, 0.14 to 0.84 MPa)	20 to 120 psi (1.4 to 8.4 bar, 0.14 to 0.84 MPa)
Air inlet size	1/2 npt(f)	1/2 npt(f)
Fluid inlet & outlet size****	1-1/2 npt(f) or bspt(f)	1-1/2 npt(f) or bspt(f)
Weight	33.5 lb (15.2 kg)	86 lb (40 kg)
Weight with stainless steel center section	n/a	98.8 lb (44.8 kg)
Instruction manual	308441	308441

**Flow rates are with muffler and do not vary based on diaphragm material*
***Displacement per cycle may vary based on suction condition, discharge head, air pressure and fluid type*
**** Actual pump performance may be affected by prolonged usage at temperature*

Popular Models

Material	Part Number (NPT Ported) Standard Air Valve	Part Number (NPT Ported) Remote* Air Valve	Part Number (BSP Ported) Standard Air Valve	Part Number (BSP Ported) Remote* Air Valve	Seat Material	Ball Material	Diaphragm Material	Fluid Kit	Air Kit	Air Control**
Standard Pumps with Aluminum Center Section										
Aluminum	DB3311	DC3311	DBC311	DCC311	Stainless Steel	PTFE	PTFE	D0B311	236273	246947
	DB3341		DBC341		Hardened SST	Stainless Steel	PTFE	D0B331	236273	246947
	DB3366	DC3366	DBC366	DCC366	Stainless Steel	Santoprene	Santoprene	D0B366	236273	246947
	DB3377	DC3377	DBC377	DCC377	Stainless Steel	Buna-N	Buna-N	D0B377	236273	246947
	DB3525	DC3525	DBC525	DCC525	TPE	Acetal	TPE	D0B525	236273	246947
	DB3555		DBC555		TPE	TPE	TPE	D0B555	236273	246947
	DB3666	DC3666	DBC666	DCC666	Santoprene	Santoprene	Santoprene	D0B666	236273	246947
	DB3777	DC3777	DBC777	DCC777	Buna-N	Buna-N	Buna-N	D0B777	236273	246947
	DB3888	DC3888	DBC888	DCC888	Fluoroelastomer	Fluoroelastomer	Fluoroelastomer	D0B888	236273	246947
	DB3GGG	DC3GGG	DBCGGG	DCCGGG	Geolast	Geolast	Geolast	D0BGGG	236273	246947
	DB3911		DBC911		Polypropylene	PTFE	PTFE	D0B911	236273	246947
	DB3977		DBC977		Polypropylene	Buna-N	Buna-N	D0B977	236273	246947
Stainless Steel	DB4311	DC4311	DBD311	DCD311	Stainless Steel	PTFE	PTFE	D0B311	236273	246947
	DB4341		DBD341		Stainless Steel	Hardened SST	PTFE	D0B341	236273	246947
	DB4377	DC4377	DBD377	DCD377	Stainless Steel	Buna-N	Buna-N	D0B377	236273	246947
	DB4525		DBD525		TPE	Acetal	TPE	D0B525	236273	246947
	DB4666	DC4666	DBD666	DCD666	Santoprene	Santoprene	Santoprene	D0B666	236273	246947
	DB4777	DC4777	DBD777	DCD777	Buna-N	Buna-N	Buna-N	D0B777	236273	246947
	DB4888	DC4888	DBD888	DCD888	Fluoroelastomer	Fluoroelastomer	Fluoroelastomer	D0B888	236273	246947
	DB4GGG	DC4GGG	DBDGGG	DCDGGG	Geolast	Geolast	Geolast	D0BGGG	236273	246947
	DB4911		DBD911		Polypropylene	PTFE	PTFE	D0B911	236273	246947
Corrosion Resistant Pumps with Stainless Steel Center Section										
Stainless Steel	DT4311	DU4311	DTD311	DUD311	Stainless Steel	PTFE	PTFE	D0B311	255061	246947
	DT4377	DU4377	DTD377	DUD377	Stainless Steel	Buna-N	Buna-N	D0B377	255061	246947
	DT4388	DU4388	DTD388	DUD388	Stainless Steel	Fluoroelastomer	Fluoroelastomer	D0B388	255061	246947
	DT4666	DU4666	DTD666	DUD666	Santoprene	Santoprene	Santoprene	D0B666	255061	246947
	DT4888	DU4888	DTD888	DUD888	Fluoroelastomer	Fluoroelastomer	Fluoroelastomer	D0B888	255061	246947
	DT4911	DU4911	DTD911	DUD911	Polypropylene	PTFE	PTFE	D0B911	255061	246947

**Requires CycleFlo or external valve control*
*** Air control includes air regulator and filter with gauge*

Stainless Steel Flange Models*

Part Number	Outlet Orientation	Seat Material	Ball Material	Diaphragm Material	Air Valve	Seat Kit	Ball Kit	Diaphgram Kit
25C654	Horizontal	Stainless Steel	PTFE	Overmolded PTFE	236273	D0B300	D0B010	253627
25C656	Vertical	Stainless Steel	PTFE	Overmolded PTFE	236273	D0B300	D0B010	253627
DBR311	Horizontal	Stainless Steel	PTFE	PTFE	236273	D0B300	D0B010	D0B001
DBP311	Vertical	Stainless Steel	PTEF	PTFE	236273	D0B300	D0B010	D0B001
DBR366	Horizontal	Stainless Steel	Santoprene	Santoprene	236273	D0B300	D0B060	D0B006
DBP366	Vertical	Stainless Steel	Santoprene	Santoprene	236273	D0B300	D0B060	D0B006

**All stainless steel flange models have a fixed center inlet.*

Husky 1590 Metal Pumps

Performance Charts

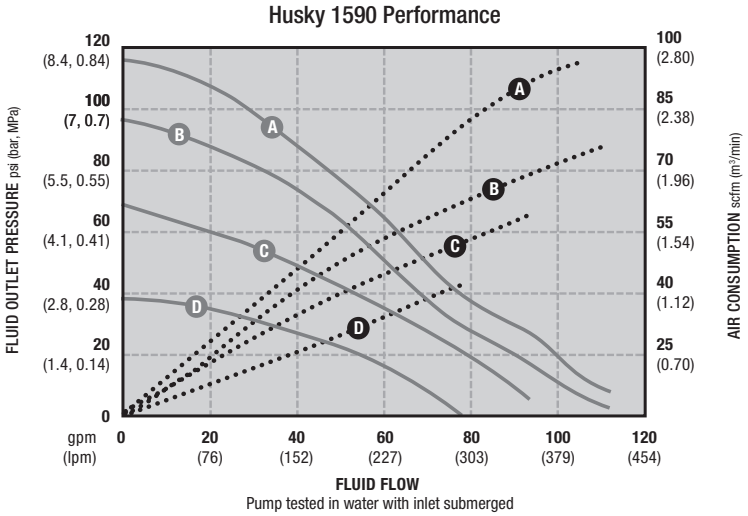

AIR PRESSURE	LEGEND
(A) = at 120 psi (8.4 bar, 0.84 MPa)	Air Consumption •••••
(B) = at 100 psi (7 bar, 0.7 MPa)	Fluid Pressure ———
(C) = at 70 psi (4.8 bar, 0.48 MPa)	
(D) = at 40 psi (2.8 bar, 0.28 MPa)	

Dimensions

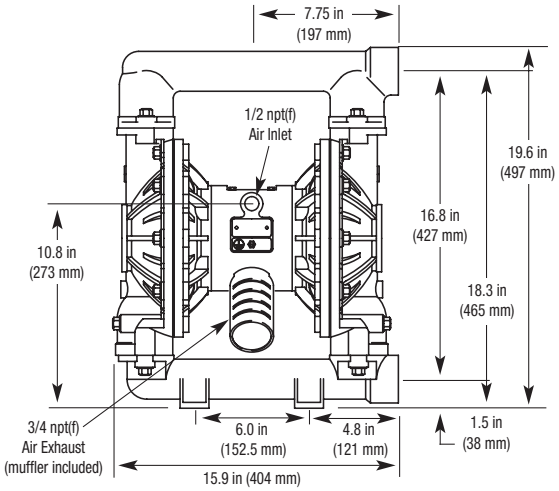

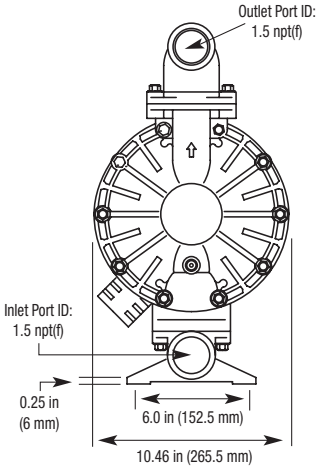

Refer to manual 308441 for additional dimensions

Typical System Drawings

Husky 1590 Above Ground Gravity Feed

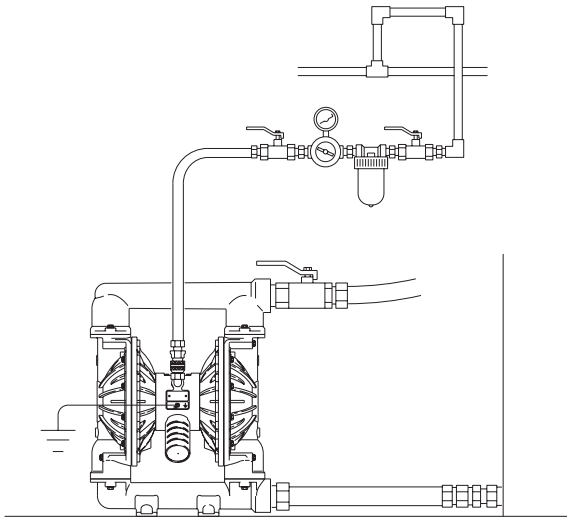

Husky 15120 Selector Tool

To order a Husky 15120, use the online selector tool at **www.graco.com/pumpselectors** or contact your distributor.

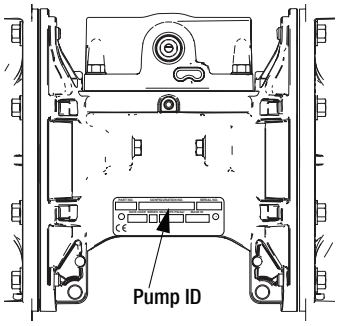

NOTE: Check the identification plate (ID) for the Configuration Number of your pump. Use the following matrix to define the components of your pump.

Example of Product Selector Tool on www.graco.com/pumpselectors.

Pump Configuration Options

Pump (1.5 inch ports, 120 gpm)	Center Section and Air Valve Material		For Use With	Fluid Covers and Manifolds	
15120P Polypropylene	Polypropylene	**P01A**	Standard Diaphragms	**P1**	Polypropylene, Center Flange, ANSI/DIN
				P2	Polypropylene, End Flange, ANSI/DIN
15120F PVDF	Polypropylene	**P01G**	Overmolded Diaphragms	**F2**	PVDF, End Flange, ANSI/DIN

Seat Material		Ball Material		Diaphragm Material		Manifold/Seat Seal Material	
PP	Polypropylene	**FK**	FKM	**FK**	FKM Fluoroelastomer	**PT**	PTFE
PV	PVDF	**PT**	PTFE	**PO**	PTFE/EPDM Overmolded		
SP	Santoprene®	**SP**	Santoprene	**PT**	PTFE/Santoprene Two-Piece		
SS	316 Stainless Steel			**SP**	Santoprene		

Husky 15120 Plastic Pumps

Popular Models

Part Number	Air Section	Fluid Section	Porting	Seat	Ball	Diaphragm	Air Valve Replacement Kit	Seat Kit	Ball Kit	Diaphragm Kit
654504	Polypropylene	Polypropylene	Center	Polypropylene	PTFE	2-Piece PTFE	24B773	24W225	24W228	24W220
654505	Polypropylene	Polypropylene	Center	Polypropylene	PTFE	PTFE OM	24B773	24W225	24W228	24W217
654511	Polypropylene	Polypropylene	End	Polypropylene	PTFE	2-Piece PTFE	24B773	24W225	24W228	24W220
654512	Polypropylene	Polypropylene	End	Polypropylene	PTFE	PTFE OM	24B773	24W225	24W228	24W217
654500	Polypropylene	Polypropylene	Center	Polypropylene	Santoprene	Santoprene	24B773	24W225	24W229	24W218
654507	Polypropylene	Polypropylene	End	Polypropylene	Santoprene	Santoprene	24B773	24W225	24W229	24W218
654517	Polypropylene	Polypropylene	Center	SST	FKM	FKM	24B773	24W227	24W230	24W219
654518	Polypropylene	Polypropylene	Center	SST	PTFE	2-Piece PTFE	24B773	24W227	24W228	24W220
654519	Polypropylene	Polypropylene	Center	SST	PTFE	PTFE OM	24B773	24W227	24W228	24W217
654523	Polypropylene	Polypropylene	End	SST	FKM	FKM	24B773	24W227	24W230	24W219
654524	Polypropylene	Polypropylene	End	SST	PTFE	2-Piece PTFE	24B773	24W227	24W228	24W220
654525	Polypropylene	Polypropylene	End	SST	PTFE	PTFE OM	24B773	24W227	24W228	24W217
654526	Polypropylene	Polypropylene	Center	Santoprene	Santoprene	Santoprene	24B773	24W226	24W229	24W218
654528	Polypropylene	Polypropylene	End	Santoprene	Santoprene	Santoprene	24B773	24W226	24W229	24W218
654544	Polypropylene	PVDF	End	PVDF	FKM	FKM	24B773	24W223	24W230	24W219
654546	Polypropylene	PVDF	End	PVDF	PTFE	2-Piece PTFE	24B773	24W223	24W228	24W220
654547	Polypropylene	PVDF	End	PVDF	PTFE	PTFE OM	24B773	24W223	24W228	24W217

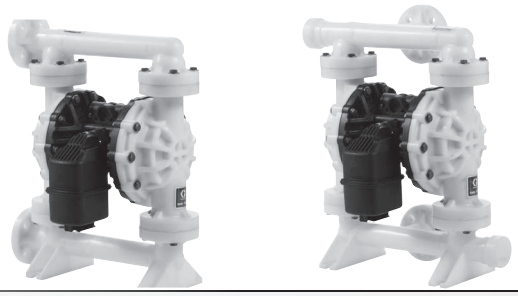

Technical Specifications

Husky 15120 Pumps	Polypropylene	PVDF
Maximum fluid working pressure	125 psi (8.6 bar, 0.86 MPa)	125 psi (8.6 bar, 0.86 MPa)
Maximum free flow delivery*	120 gpm (454 lpm)	120 gpm (454 lpm)
Maximum pump speed	190 cpm	190 cpm
Displacement per cycle**	0.63 gallon (2.4 liter)	0.63 gallon (2.4 liter)
Maximum suction lift (DB2366)	16 ft (4.9 m) dry	16 ft (4.9 m) dry
Maximum size pumpable solids	0.25 in (6.3 mm)	0.25 in (6.3 mm)
Maximum operating temperature***	150°F (65.5°C)	225°F (107°C)
Maximum diaphragm operating temperature***		
PTFE	150°F (65.5°C)	220°F (104.4°C)
PTFE overmolded diaphragm	150°F (65.5°C)	180°F (82.2°C)
Santoprene	150°F (65.5°C)	180°F (82.2°C)
Buna-N	150°F (65.5°C)	180°F (82.2°C)
TPE	150°F (65.5°C)	150°F (65.5°C)
Fluoroelastomer	150°F (65.5°C)	225°F (107°C)
Geolast	150°F (65.5°C)	150°F (65.5°C)
Typical sound power at 70 psi (4.9 bar, 0.49 MPa) air @ 50 cpm	90.9 dBa	90.9 dBa
Maximum air consumption	85 scfm (2.4 m^3/min.)	85 scfm (2.4 m^3/min.)
Air pressure operating range	20 to 125 psi (1.4 to 8.6 bar, 0.14 to 0.86 MPa)	20 to 125 psi (1.4 to 8.6 bar, 0.14 to 0.86 MPa)
Air inlet size	1/2 npt(f)	1/2 npt(f)
Fluid inlet & outlet size	1-1/2 npt(f) or bspt(f)	1-1/2 npt(f) or bspt(f)
Weight	57 lb (25.9 kg)	74 lb (33.5 kg)
Instruction manual	3A2888	3A2888

**Flow rates are with muffler and do not vary based on diaphragm material*
***Displacement per cycle may vary based on suction condition, discharge head, air pressure and fluid type*
**** Actual pump performance may be affected by prolonged usage at temperature*

Dimensions

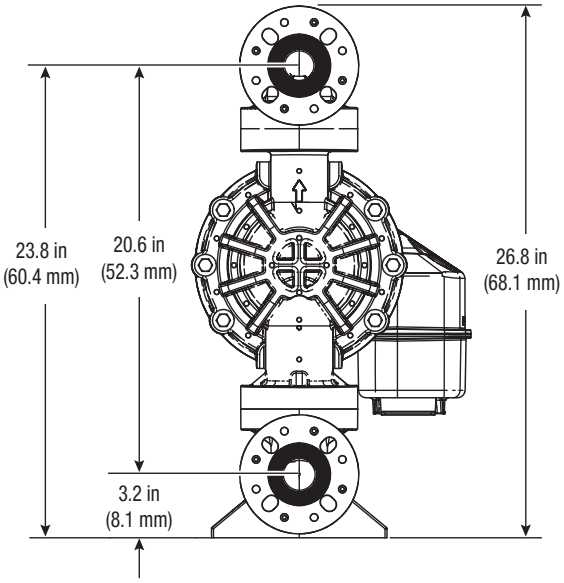
23.8 in
(60.4 mm)
20.6 in
(52.3 mm)
26.8 in
(68.1 mm)
3.2 in
(8.1 mm)

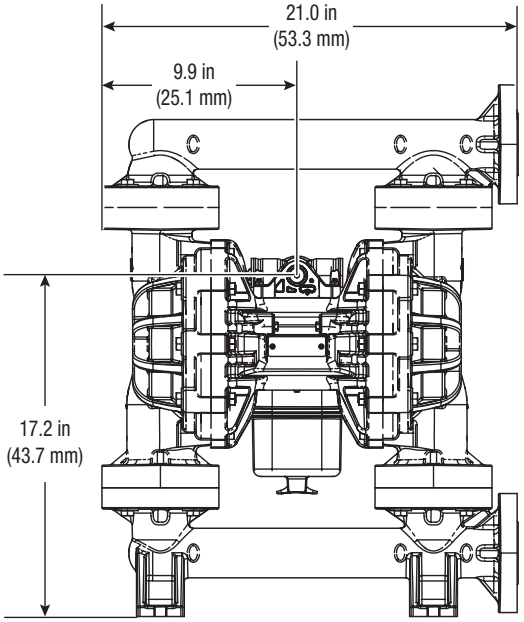
21.0 in
(53.3 mm)
9.9 in
(25.1 mm)
17.2 in
(43.7 mm)

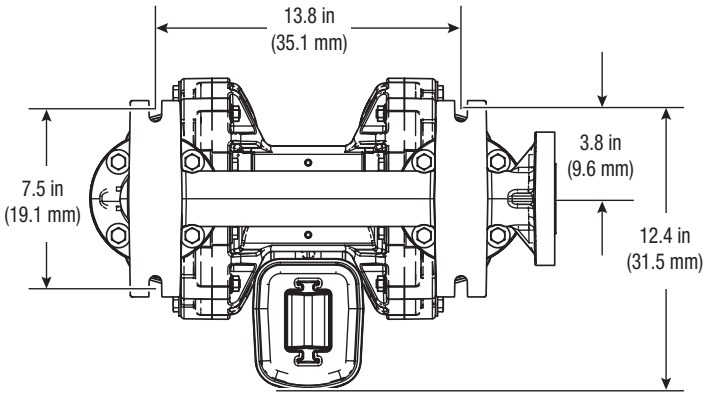
13.8 in
(35.1 mm)
7.5 in
(19.1 mm)
3.8 in
(9.6 mm)
12.4 in
(31.5 mm)

Husky 15120 Plastic Pumps

Performance Charts

1-Piece Bolt Through Design

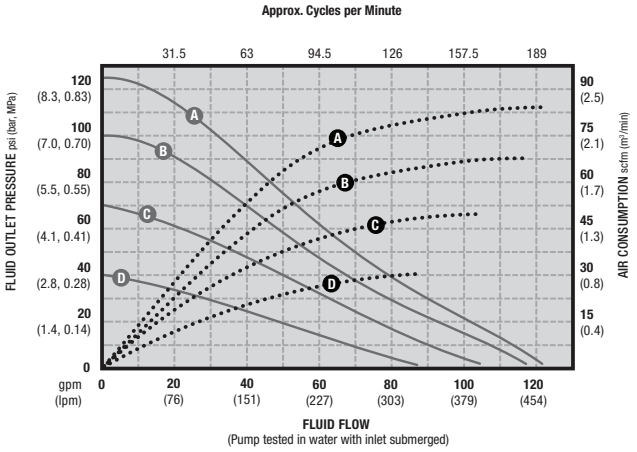

AIR PRESSURE	LEGEND
(A) = at 125 psi (8.3 bar, 0.83 MPa)	Air Consumption ·····
(B) = at 100 psi (7 bar, 0.7 MPa)	Fluid Pressure ——
(C) = at 70 psi (4.8 bar, 0.48 MPa)	
(D) = at 40 psi (2.8 bar, 0.28 MPa)	

2-Piece Bolt Through Design

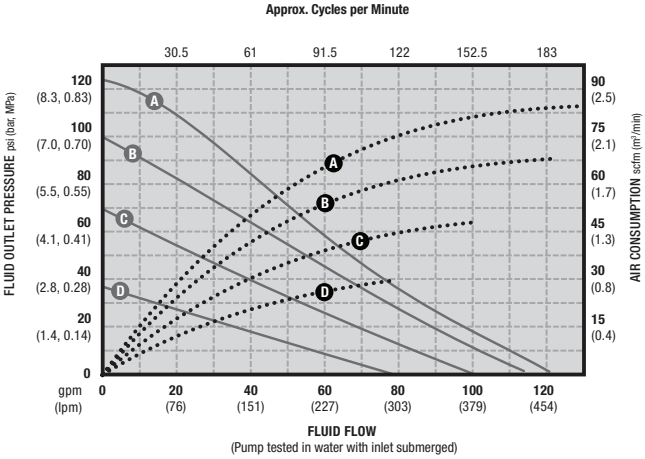

AIR PRESSURE	LEGEND
(A) = at 125 psi (8.3 bar, 0.83 MPa)	Air Consumption ·····
(B) = at 100 psi (7 bar, 0.7 MPa)	Fluid Pressure ——
(C) = at 70 psi (4.8 bar, 0.48 MPa)	
(D) = at 40 psi (2.8 bar, 0.28 MPa)	

Overmolded Design

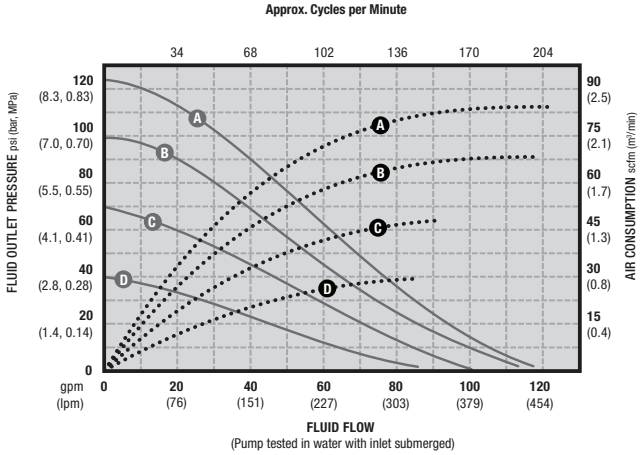

AIR PRESSURE	LEGEND
(A) = at 125 psi (8.3 bar, 0.83 MPa)	Air Consumption ·····
(B) = at 100 psi (7 bar, 0.7 MPa)	Fluid Pressure ——
(C) = at 70 psi (4.8 bar, 0.48 MPa)	
(D) = at 40 psi (2.8 bar, 0.28 MPa)	

Husky 2150 Selector Tool

To order a Husky 2150, use the online selector tool at **www.graco.com/pumpselectors** or contact your distributor.

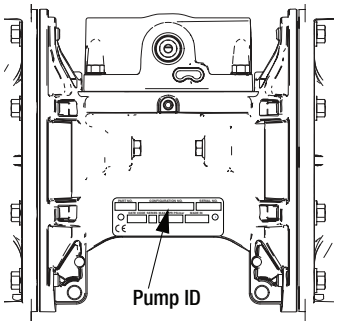

NOTE: Check the identification plate (ID) for the Configuration Number of your pump. Use the following matrix to define the components of your pump.

Example of Product Selector Tool on www.graco.com/pumpselectors.

Pump Configuration Options

Pump (1.5 inch ports, 90 gpm)	Center Section and Air Valve Material		Air Valve/Monitoring	Fluid Covers and Manifolds	
P Polypropylene 2150	Aluminum	**A01A**	Standard w/Buna-N Seals	**F2**	PVDF, end flange
		A01D	Remote w/ Buna-N Seals		
F PVDF 2150	Stainless Steel	**S01A**	Standard	**P2**	Polypropylene, end flange
		S01D	Remote		

Check Valve Seats		Check Valve Balls		Diaphragm		Manifold O-Rings	
BN	Buna-N	**AC**	Acetal	**BN**	Buna-N	**—**	None
FK	Fluoroelastomer	**BN**	Buna-N	**FK**	Fluoroelastomer	**PT**	PTFE
GE	Geolast	**FK**	Fluoroelastomer	**GE**	Geolast		
PP	Polypropylene	**GE**	Geolast	**PT**	PTFE/EPDM Two-Piece		
PV	PVDF	**PT**	PTFE	**SP**	Santoprene		
SA	17-4 Stainless Steel	**SD**	440C Stainless Steel	**TP**	TPE		
SP	Santoprene	**SP**	Santoprene				
SS	316 Stainless Steel	**TP**	TPE				
TP	TPE						

Husky 2150 Plastic Pumps

Ordering Information

D	X	X	X	X	X
Diaphragm Pump	Pump Size	Wetted Parts	Seats	Balls/ Checks	Diaphragms

PUMP SIZE (AIR MOTOR TYPE AND MATERIAL)	WETTED PARTS	SEATS	BALLS	DIAPHRAGM
F = 2” (50.8 mm) Standard: aluminum center section	2 = Poly (npt)	3 = Stainless Steel	1 = PTFE	1 = PTFE
G = 2” (50.8 mm) Remote: aluminum center section	5 = PVDF (npt)	4 = Hardened SST	2 = Acetal	5 = TPE
V = 2” (50.8 mm) Standard: stainless steel center section		5 = TPE	4 = Hardened SST	6 = Santoprene
		6 = Santoprene	5 = TPE	7 = Buna-N
		7 = Buna-N	6 = Santoprene	8 = Fluoroelastomer
		8 = Fluoroelastomer	7 = Buna-N	G = Geolast
		9 = Polypropylene	8 = Fluoroelastomer	
		A = PVDF	G = Geolast	
		G = Geolast		

Popular Models

Material	Part Number (ANSI-Flange)		Part Number (BSP Ported)		Materials for Seats	Materials for Balls	Materials for Diaphragms	Fluid Kit	Air Kit	Air Control**
	Standard Air Valve	Remote* Air Valve	Standard Air Valve	Remote* Air Valve						
Standard Pumps with Aluminum Center Section										
Polypropylene	DF2311				Stainless Steel	PTFE	PTFE	D0G311	236273	246947
	DF2377	DG2377			Stainless Steel	Buna-N	Buna-N	D0G377	236273	246947
	DF2777	DG2777			Buna	Buna-N	Buna-N	D0G777	236273	246947
	DF2888	DG2888			Fluoroelastomer	Fluoroelastomer	Fluoroelastomer	D0G888	236273	246947
	DF2911	DG2911			Polypropylene	PTFE	PTFE	D0G911	236273	246947
	DF2955				Polypropylene	TPE	TPE	D0G955	236273	246947
	DF2966				Polypropylene	Santoprene	Santoprene	D0G966	236273	246947
	DF2977				Polypropylene	Buna-N	Buna-N	D0G977	236273	246947
	DF2988				Polypropylene	Fluoroelastomer	Fluoroelastomer	D0G988	236273	246947
	DF29GG	DG29GG			Polypropylene	Geolast	Geolast	D0G9GG	236273	246947
PVDF	DF5311				Stainless Steel	PTFE	PTFE	D0G311	236273	246947
	DF5666				Santoprene	Santoprene	Santoprene	D0G666	236273	246947
	DF5811	DG5911			Fluoroelastomer	PTFE	PTFE	D0G811	236273	246947
	DF5888	DG5888			Fluoroelastomer	Fluoroelastomer	Fluoroelastomer	D0G888	236273	246947
	DF5A11	DG5A11			PVDF	PTFE	PTFE	D0GA11	236273	246947
	DF5A88				PVDF	Fluoroelastomer	Fluoroelastomer	D0GA88	236273	246947

**Requires CycleFlo or external valve control*
*** Air control includes air regulator and filter with gauge*

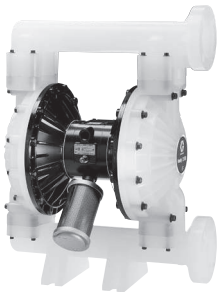

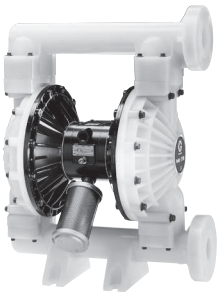

Technical Specifications

Husky 2150 Plastic Pumps	Polypropylene	PVDF
Maximum fluid working pressure	120 psi (8.4 bar, 0.84 MPa)	120 psi (8.4 bar, 0.84 MPa)
Maximum free flow delivery*	150 gpm (568 lpm)	150 gpm (568 lpm)
Maximum pump speed	145 cpm	145 cpm
Displacement per cycle**	1.03 gallon (3.90 liter)	1.03 gallon (3.90 liter)
Maximum suction lift	18 ft (5.48 m) wet or dry	18 ft (5.48 m) wet or dry
Maximum size pumpable solids	0.25 in (6.3 mm)	0.25 in (6.3 mm)
Maximum operating temperature***	150°F (65.5°C)	150°F (65.5°C)
Maximum diaphragm operating temperature***		
PTFE	220°F (104.4°C)	220°F (104.4°C)
Santoprene	180°F (82.2°C)	180°F (82.2°C)
Buna-N	180°F (82.2°C)	180°F (82.2°C)
TPE	150°F (65.5°C)	150°F (65.5°C)
Fluoroelastomer	250°F (121.1°C)	250°F (121.1°C)
Geolast	150°F (65.5°C)	150°F (65.5°C)
Typical sound level at 70 psi (4.9 bar, 0.49 MPa) air @ 125 cpm	78 dBa	78 dBa
Maximum air consumption	175 scfm (4.9 m3/min)	175 scfm (4.9 m3/min)
Air consumption at 70 psi/60 gpm	60 scfm (1.7 m3/min)	60 scfm (1.7 m3/min)
Air pressure operating range	20 to 120 psi (1.4 to 8.4 bar, 0.14 to 0.84 MPa)	20 to 120 psi (1.4 to 8.4 bar, 0.14 to 0.84 MPa)
Air inlet size	1/2 npt(f)	1/2 npt(f)
Fluid inlet & outlet size****	2 in (51 mm) ANSI-flange	2 in (51 mm) ANSI-flange
Weight	49 lb (22 kg)	68 lb (30.8 kg)
Weight with stainless steel center section	68.5 lb (31 kg)	87.5 lb (39.6 kg)
Instruction manual	308550	308550

** Flow rates are with muffler and do not vary based on diaphragm material*
*** Displacement per cycle may vary based on suction condition, discharge head, air pressure and fluid type*
**** Actual pump performance may be affected by prolonged usage at temperature*

Husky 2150 Plastic Pumps

Performance Charts

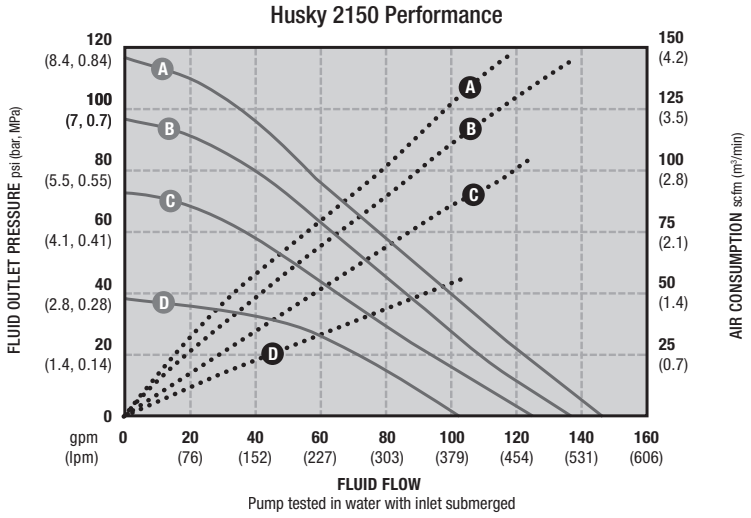

AIR PRESSURE	LEGEND
(A) = at 120 psi (8.4 bar, 0.84 MPa)	Air Consumption •••••
(B) = at 100 psi (7 bar, 0.7 MPa)	Fluid Pressure ———
(C) = at 70 psi (4.8 bar, 0.48 MPa)	
(D) = at 40 psi (2.8 bar, 0.28 MPa)	

Dimensions

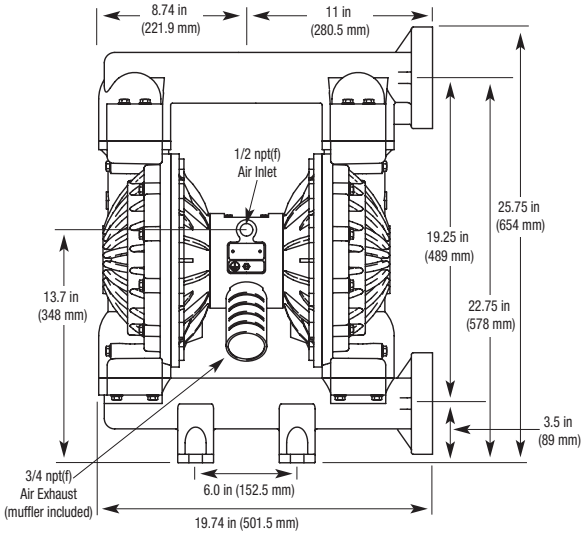

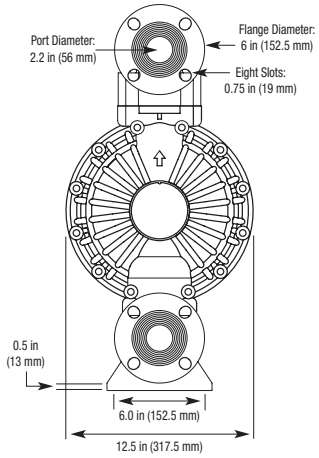

Typical System Drawings

Husky 2150 Above Ground Gravity Feed

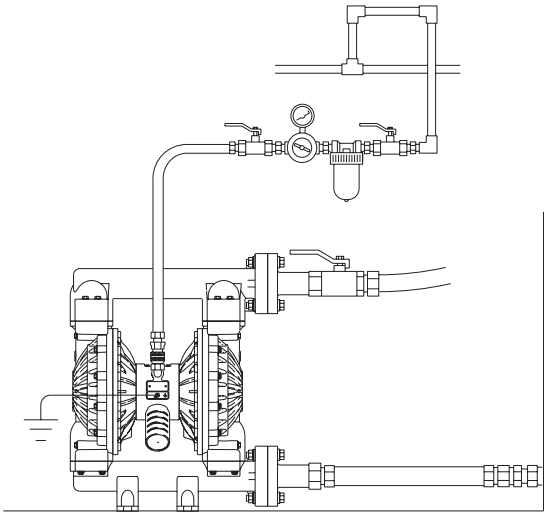

Husky 2150 Selector Tool

To order a Husky 2150, use the online selector tool at **www.graco.com/pumpselectors** or contact your distributor.

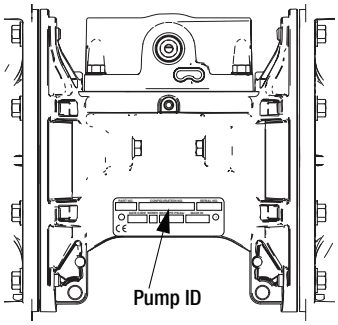

NOTE: Check the identification plate (ID) for the Configuration Number of your pump. Use the following matrix to define the components of your pump.

Example of Product Selector Tool on www.graco.com/pumpselectors.

Pump Configuration Options

Pump (2.0 inch ports, 150 gpm)	Center Section and Air Valve Material		Air Valve/Monitoring	Fluid Covers and Manifolds	
A ★ Aluminum 2150	Aluminum	**A01A**	Standard	**A1**	Aluminum, standard ports, NPT
		A01D	Remote	**A2**	Aluminum, standard ports, BSPT
S ‡ Stainless Steel 2150	Stainless Steel	**S01A**	Standard	**S1**	Stainless steel, standard ports, NPT
		S01D	Remote	**S2**	Stainless steel, standard ports, BSPT

★, ‡, or ✖: See **ATEX Certifications** below.

Check Valve Seats		Check Valve Balls		Diaphragm		Manifold O-Rings	
BN	Buna-N	**AC**	Acetal	**BN**	Buna-N	**—**	None
FK	Fluoroelastomer	**BN**	Buna-N	**FK**	Fluoroelastomer	**PT**	PTFE
GE	Geolast	**FK**	Fluoroelastomer	**GE**	Geolast		
PP	Polypropylene	**GE**	Geolast	**PO**	PTFE Overmolded		
PV	PVDF	**PT**	PTFE	**PT**	PTFE/EPDM Two-Piece		
SA	17-4 Stainless Steel	**SD**	440C Stainless Steel	**SP**	Santoprene		
SP	Santoprene	**SP**	Santoprene	**TP**	TPE		
SS	316 Stainless Steel	**TP**	TPE				
TP	TPE						

ATEX Certifications

★ All Aluminum 2150 pumps are certified:

Ex II 2 G c IIC T4

‡ Stainless Steel pumps with aluminum or conductive polypropylene centers are certified:

Ex II 2 G c IIC T4

✖ DataTrak and Pulse Count are certified:

Ex II 2 G

EEx ia IIA T3
Nemko
06ATEX1124

Husky 2150 Metal Pumps

Ordering Information

D	X	X	X	X	X
Diaphragm Pump	Pump Size	Wetted Parts	Seats	Balls/ Checks	Diaphragms

PUMP SIZE (AIR MOTOR TYPE AND MATERIAL)	WETTED PARTS	SEATS	BALLS	DIAPHRAGM
F = 2” (50.8 mm) Standard: aluminum center section	3 = Aluminum (npt)	3 = Stainless Steel	1 = PTFE	1 = PTFE
G = 2” (50.8 mm) Remote: aluminum center section	4 = Stainless Steel (npt)	4 = Hardened SST	2 = Acetal	5 = TPE
V = 2” (50.8 mm) Standard: stainless steel center section	6 = Ductile Iron (npt)	5 = TPE	4 = Hardened SST	6 = Santoprene
	C = Aluminum (bspt)	6 = Santoprene	5 = TPE	7 = Buna-N
	D = Stainless Steel (bspt)	7 = Buna-N	6 = Santoprene	8 = Fluoroelastomer
	F = Ductile Iron (bspt)	8 = Fluoroelastomer	7 = Buna-N	G = Geolast
		9 = Polypropylene	8 = Fluoroelastomer	
	H = 2 npt Alum Extended	A = PVDF	G = Geolast	
	G = 2 bsp Alum Extended	G = Geolast		

Technical Specifications

Husky 2150 Metal Pumps	Aluminum	Stainless Steel	Ductile Iron
Maximum fluid working pressure	120 psi (8.4 bar, 0.84 MPa)	120 psi (8.4 bar, 0.84 MPa)	120 psi (8.4 bar, 0.84 MPa)
Maximum free flow delivery*	150 gpm (568 lpm)	150 gpm (568 lpm)	150 gpm (568 lpm)
Maximum pump speed	145 cpm	145 cpm	145 cpm
Displacement per cycle**	1.03 gallon (3.90 liter)	1.03 gallon (3.90 liter)	1.03 gallon (3.90 liter)
Maximum suction lift (DF3666)	20 ft (6.1 m) dry	20 ft (6.1 m) dry	20 ft (6.1 m) dry
Maximum size pumpable solids	0.25 in (6.3 mm)	0.25 in (6.3 mm)	0.25 in (6.3 mm)
Maximum operating temperature***	150°F (65.5°C)	150°F (65.5°C)	150°F (65.5°C)
Maximum diaphragm operating temperature*** PTFE Santoprene Buna-N TPE Fluoroelastomer Geolast	 220°F (104.4°C) 180°F (82.2°C) 180°F (82.2°C) 150°F (65.5°C) 250°F (121.1°C) 150°F (65.5°C)	 220°F (104.4°C) 180°F (82.2°C) 180°F (82.2°C) 150°F (65.5°C) 250°F (121.1°C) 150°F (65.5°C)	 220°F (104.4°C) 180°F (82.2°C) 180°F (82.2°C) 150°F (65.5°C) 250°F (121.1°C) 150°F (65.5°C)
Typical sound level at 70 psi (4.9 bar, 0.49 MPa) air @ 125 cpm	78 dBa	78 dBa	78 dBa
Maximum air consumption	175 scfm (4.9 m3/min)	175 scfm (4.9 m3/min)	175 scfm (4.9 m3/min)
Air pressure operating range	20 to 120 psi (1.4 to 8.4 bar, 0.14 to 0.84 MPa)	20 to 120 psi (1.4 to 8.4 bar, 0.14 to 0.84 MPa)	20 to 120 psi (1.4 to 8.4 bar, 0.14 to 0.84 MPa)
Air inlet size	1/2 npt(f)	1/2 npt(f)	1/2 npt(f)
Fluid inlet & outlet size****	2 in (51 mm) npt(f)	2 in (51 mm) npt(f)	2 in (51 mm) npt(f)
Weight	58 lb (26.3 kg) 62 lb (28.1 kg) - Extended	111 lb (50 kg)	130 lb (59 kg)
Weight with stainless steel center section	n/a	134 lb (60 kg)	n/a
Instruction manual	308368	308368	308368

** Flow rates are with muffler and do not vary based on diaphragm material*
*** Displacement per cycle may vary based on suction condition, discharge head, air pressure and fluid type*
**** Actual pump performance may be affected by prolonged usage at temperature*

Popular Models

Material	Part Number (NPT Ported) Standard Air Valve	Part Number (NPT Ported) Remote* Air Valve	Part Number (BSP Ported) Standard Air Valve	Part Number (BSP Ported) Remote* Air Valve	Seat Material	Ball Material	Diaphragm Material	Fluid Kit	Air Kit	Air Control**
Standard Pumps with Aluminum Center Section										
Aluminum***	DF3311	DG3311	DFC311	DGC311	Stainless Steel	PTFE	PTFE	D0F311	236273	246947
	DF3341	DG3341	DFC341	DGC341	Stainless Steel	Hardened SST	PTFE	D0F341	236273	246947
	DF3366	DG3366	DFC366	DGC366	Stainless Steel	Santoprene	Santoprene	D0F366	236273	246947
	DF3377	DG3377	DFC377	DGC377	Stainless Steel	Buna-N	Buna-N	D0F377	236273	246947
	DF3525	DG3525	DFC525	DGC525	TPE	Acetal	TPE	D0F525	236273	246947
	DF3555		DFC555		TPE	TPE	TPE	D0F555	236273	246947
	DF3666	DG3666	DFC666	DGC666	Santoprene	Santoprene	Santoprene	D0F666	236273	246947
	DF3777	DG3777	DFC777	DGC777	Buna-N	Buna-N	Buna-N	D0F777	236273	246947
	DF3888	DG3888	DFC888	DGC888	Fluoroelastomer	Fluoroelastomer	Fluoroelastomer	D0F888	236273	246947
	DF3GGG	DG3GGG	DFCGGG	DGCGGG	Geolast	Geolast	Geolast	D0FGGG	236273	246947
	DF3911	DG3911	DFC911	DGC911	Polypropylene	PTFE	PTFE	D0F911	236273	246947
	DF3977	DG3977	DFC977		Polypropylene	Buna-N	Buna-N	D0F977	236273	246947
Stainless Steel	DF4311	DG4311	DFD311	DGD311	Stainless Steel	PTFE	PTFE	D0F311	236273	246947
	DF4341		DFD341		Stainless Steel	Hardened SST	PTFE	D0F341	236273	246947
	DF4366	DG4366	DFD366	DGD366	Stainless Steel	Santoprene	Santoprene	D0F366	236273	246947
	DF4377	DG4377	DFD377	DGD377	Stainless Steel	Buna-N	Buna-N	D0F377	236273	246947
	DF4525		DFD525		TPE	Acetal	TPE	D0F525	236273	246947
	DF4666	DG4666	DFD666	DGD666	Santoprene	Santoprene	Santoprene	D0F666	236273	246947
	DF4777	DG4777	DFD777	DGD777	Buna-N	Buna-N	Buna-N	D0F777	236273	246947
	DF4888	DG4888	DFD888	DGD888	Fluoroelastomer	Fluoroelastomer	Fluoroelastomer	D0F888	236273	246947
	DF4GGG	DG4GGG	DFDGGG	DGDGGG	Geolast	Geolast	Geolast	D0FGGG	236273	246947
	DF4911		DFD911		Polypropylene	PTFE	PTFE	D0F911	236273	246947
Ductile	DF6311		DFF311		Stainless Steel	PTFE	PTFE	D0F311	236273	246947
	DF6366		DFF366		Stainless Steel	Santoprene	Santoprene	D0F366	236273	246947
	DF6441		DFF441		Hardened SST	Hardened SST	PTFE	D0F441	236273	246947
	DF6466	DG6466	DFF466	DGF466	Hardened SST	Santoprene	Santoprene	D0F466	236273	246947
	DF6525		DFF525		TPE	Acetal	TPE	D0F525	236273	246947
	DF6666	DG6666	DFF666	DGF666	Santoprene	Santoprene	Santoprene	D0F666	236273	246947
	DF6A11		DFFA11		PVDF	PTFE	PTFE	D0FA11	236273	246947
	DF6A88		DFFA88		PVDF	Fluoroelastomer	Fluoroelastomer	D0FA88	236273	246947
	DF6GGG	DG6GGG	DFFGGG	DGFGGG	Geolast	Geolast	Geolast	D0FGGG	236273	246947
Corrosion Resistant Pumps with Stainless Steel Center Section										
Stainless Steel	DV4311		DVD311		Stainless Steel	PTFE	PTFE	D0F311	255061	246947
	DV4377		DVD377		Stainless Steel	Buna-N	Buna-N	D0F377	255061	246947
	DV4388		DVD388		Stainless Steel	Fluoroelastomer	Fluoroelastomer	D0F388	255061	246947
	DV4666		DVD666		Santoprene	Santoprene	Santoprene	D0F666	255061	246947
	DV4888		DVD888		Fluoroelastomer	Fluoroelastomer	Fluoroelastomer	D0F888	255061	246947
	DV4911		DVD911		Polypropylene	PTFE	PTFE	D0F911	255061	246947

Requires CycleFlo or external valve control. ** Air control includes air regulator and filter with gauge. * Also available in Extended Height version; use DFH or DFG designations*

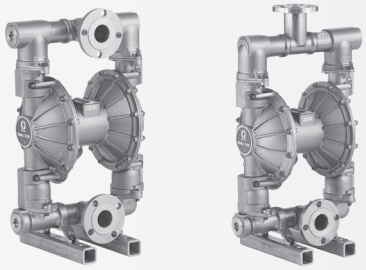

Stainless Steel Flange Models*

Part Number	Outlet Orientation	Seat Material	Ball Material	Diaphragm Material	Air Valve	Seat Kit	Ball Kit	Diaphgram Kit
25C658	Horizontal	Stainless Steel	PTFE	Overmolded PTFE	236273	D0F300	D0F010	253628
25C660	Vertical	Stainless Steel	PTFE	Overmolded PTFE	236273	D0F300	D0F010	253628
DFR311	Horizontal	Stainless Steel	PTFE	PTFE	236273	D0F300	D0F010	D0F001
DFP311	Vertical	Stainless Steel	PTFE	PTFE	236273	D0F300	D0F010	D0F001
DFR366	Horizontal	Stainless Steel	Santoprene	Santoprene	236273	D0F300	D0F060	D0F006
DFP366	Vertical	Stainless Steel	Santoprene	Santoprene	236273	D0F300	D0F060	D0F006

**All stainless steel flange models have a fixed center inlet.*

Husky 2150 Metal Pumps

Performance Charts

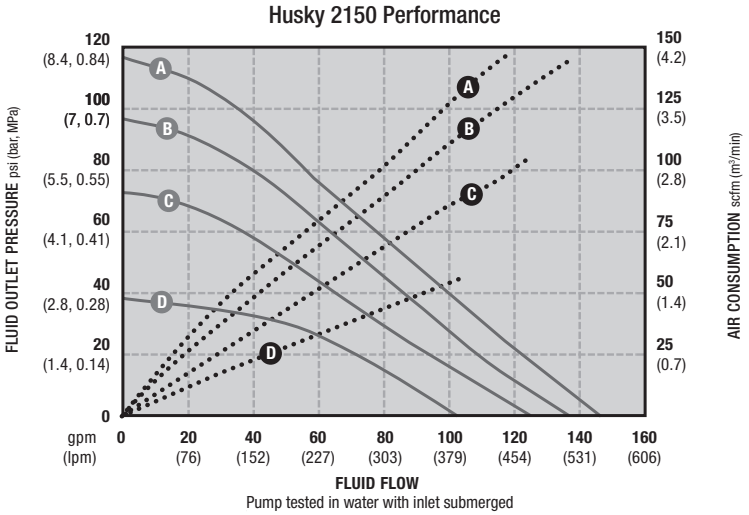

Pump tested in water with inlet submerged

AIR PRESSURE	LEGEND
(A) = at 120 psi (8.4 bar, 0.84 MPa)	Air Consumption • • • • • •
(B) = at 100 psi (7 bar, 0.7 MPa)	Fluid Pressure ———
(C) = at 70 psi (4.8 bar, 0.48 MPa)	
(D) = at 40 psi (2.8 bar, 0.28 MPa)	

Dimensions

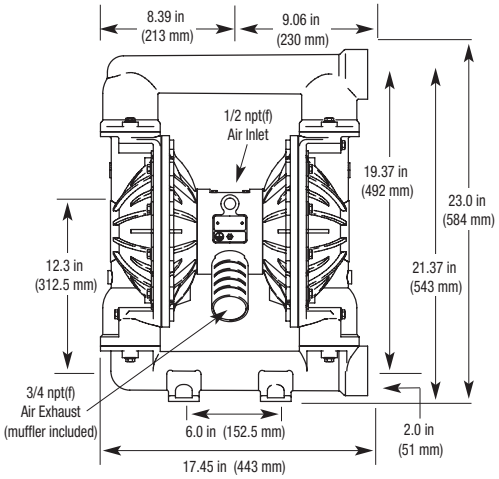

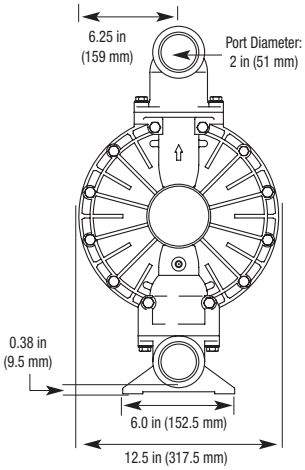

Typical System Drawings

Husky 2150 Above Ground Gravity Feed

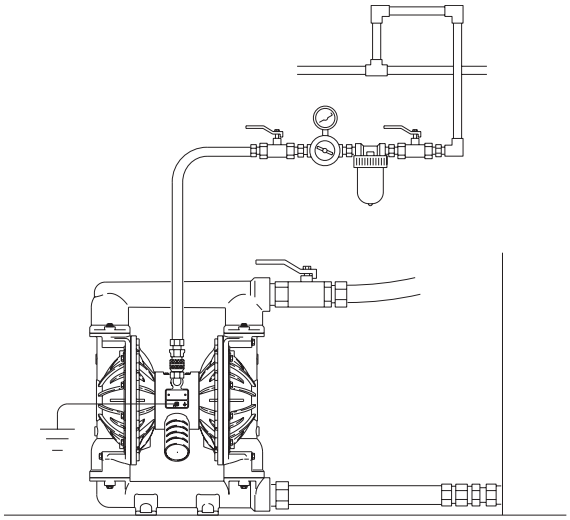

Husky 2200 Selector Tool

To order a Husky 2200, use the online selector tool at **www.graco.com/pumpselectors** or contact your distributor.

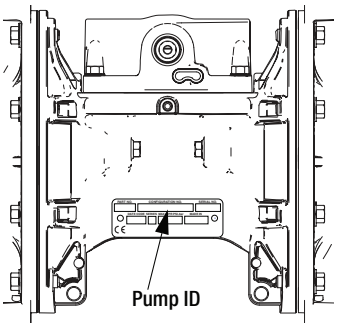

NOTE: Check the identification plate (ID) for the Configuration Number of your pump. Use the following matrix to define the components of your pump.

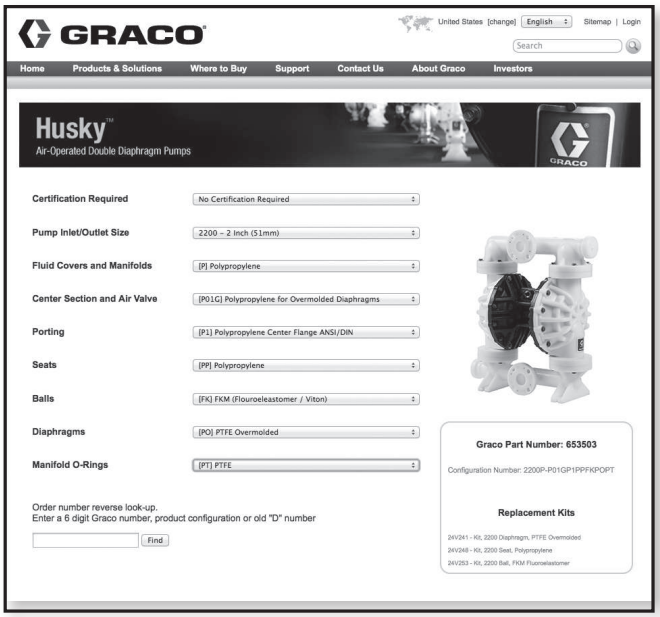

Example of Product Selector Tool on www.graco.com/pumpselectors.

Pump Configuration Options

Pump (2 inch ports, 200 gpm)	Center Section and Air Valve Material		For Use With	Fluid Covers and Manifolds	
2200P Polypropylene	Polypropylene	**P01A**	Standard Diaphragms	**P1**	Polypropylene, Center Flange, ANSI/DIN
				P2	Polypropylene, End Flange, ANSI/DIN
2200F PVDF	Polypropylene	**P01G**	Overmolded Diaphragms	**F2**	PVDF, End Flange, ANSI/DIN

Seat Material		Ball Material		Diaphragm Material		Manifold/Seat Seal Material	
PP	Polypropylene	**FK**	FKM	**FK**	FKM Fluoroelastomer	**PT**	PTFE
PV	PVDF	**PT**	PTFE	**PO**	PTFE/EPDM Overmolded		
SP	Santoprene®	**SP**	Santoprene	**PT**	PTFE/Santoprene Two-Piece		
SS	316 Stainless Steel			**SP**	Santoprene		

Husky 2200 Plastic Pumps

Popular Models

Part Number	Air Section	Fluid Section	Porting	Seat	Ball	Diaphragm	Air Valve Replacement Kit	Seat Kit	Ball Kit	Diaphragm Kit
653504	Polypropylene	Polypropylene	Center	Polypropylene	PTFE	2-Piece PTFE	24V231	24V248	24V251	24V244
653505	Polypropylene	Polypropylene	Center	Polypropylene	PTFE	PTFE OM	24V231	24V248	24V251	24V241
653511	Polypropylene	Polypropylene	End	Polypropylene	PTFE	2-Piece PTFE	24V231	24V248	24V251	24V244
653512	Polypropylene	Polypropylene	End	Polypropylene	PTFE	PTFE OM	24V231	24V248	24V251	24V241
653500	Polypropylene	Polypropylene	Center	Polypropylene	Santoprene	Santoprene	24V231	24V248	24V252	24V242
653507	Polypropylene	Polypropylene	End	Polypropylene	Santoprene	Santoprene	24V231	24V248	24V252	24V242
653517	Polypropylene	Polypropylene	Center	SST	FKM	FKM	24V231	24V250	24V253	24V243
653518	Polypropylene	Polypropylene	Center	SST	PTFE	2-Piece PTFE	24V231	24V250	24V251	24V244
653519	Polypropylene	Polypropylene	Center	SST	PTFE	PTFE OM	24V231	24V250	24V251	24V241
653523	Polypropylene	Polypropylene	End	SST	FKM	FKM	24V231	24V250	24V253	24V243
653524	Polypropylene	Polypropylene	End	SST	PTFE	2-Piece PTFE	24V231	24V250	24V251	24V244
653525	Polypropylene	Polypropylene	End	SST	PTFE	PTFE OM	24V231	24V250	24V251	24V241
653526	Polypropylene	Polypropylene	Center	Santoprene	Santoprene	Santoprene	24V231	24V249	24V252	24V242
653528	Polypropylene	Polypropylene	End	Santoprene	Santoprene	Santoprene	24V231	24V249	24V252	24V242
653544	Polypropylene	PVDF	End	PVDF	FKM	FKM	24V231	24V247	24V253	24V243
653546	Polypropylene	PVDF	End	PVDF	PTFE	2-Piece PTFE	24V231	24V247	24V251	24V244
653547	Polypropylene	PVDF	End	PVDF	PTFE	PTFE OM	24V231	24V247	24V251	24V241

Technical Specifications

Husky 2200 Pumps	Polypropylene	PVDF
Maximum fluid working pressure	125 psi (8.6 bar, 0.86 MPa)	125 psi (8.6 bar, 0.86 MPa)
Maximum free flow delivery*	200 gpm (757 lpm)	200 gpm (757 lpm)
Maximum pump speed		
Standard diaphragm	125 cpm	125 cpm
Overmolded diaphragm	155 cpm	155 cpm
Displacement per cycle**		
Standard diaphragm	1.6 gallon (6.1 liter)	1.6 gallon (6.1 liter)
Overmolded diaphragm	1.3 gallons (4.9 liter)	1.3 gallons (4.9 liter)
Maximum suction lift (DB2366)	16 ft (4.9 m) dry	16 ft (4.9 m) dry
Maximum size pumpable solids	0.25 in (6.3 mm)	0.25 in (6.3 mm)
Maximum operating temperature***	150°F (65.5°C)	225°F (107°C)
Maximum diaphragm operating temperature***		
PTFE	150°F (65.5°C)	220°F (104.4°C)
PTFE overmolded diaphragm	150°F (65.5°C)	180°F (82.2°C)
Santoprene	150°F (65.5°C)	180°F (82.2°C)
Buna-N	150°F (65.5°C)	180°F (82.2°C)
TPE	150°F (65.5°C)	150°F (65.5°C)
Fluoroelastomer	150°F (65.5°C)	225°F (107°C)
Geolast	150°F (65.5°C)	150°F (65.5°C)
Typical sound power at 70 psi (4.9 bar, 0.49 MPa) air @ 50 cpm	95.2 dBa	90.9 dBa
Maximum air consumption		
Standard diaphragm	140 scfm (4.0 m^3/min.)	140 scfm (4.0 m^3/min.)
Overmolded diaphragm	157 scfm (4.4 m^3/min.)	157 scfm (4.4 m^3/min.)
Air pressure operating range	20 to 125 psi (1.4 to 8.6 bar, 0.14 to 0.86 MPa)	20 to 125 psi (1.4 to 8.6 bar, 0.14 to 0.86 MPa)
Air inlet size	3/4 npt(f)	3/4 npt(f)
Fluid inlet & outlet size	2 npt(f) or bspt(f)	2 npt(f) or bspt(f)
Weight	80 lb (36.3 kg)	106 lb (48.1 kg)
Instruction manual	3A2578	3A2578

**Flow rates are with muffler and do not vary based on diaphragm material*
***Displacement per cycle may vary based on suction condition, discharge head, air pressure and fluid type*
**** Actual pump performance may be affected by prolonged usage at temperature*

Dimensions

Center Flange

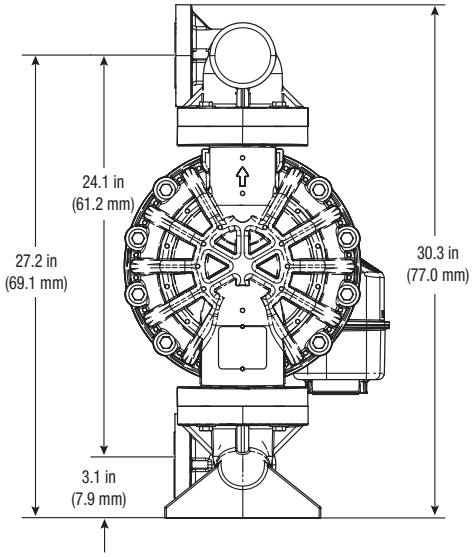

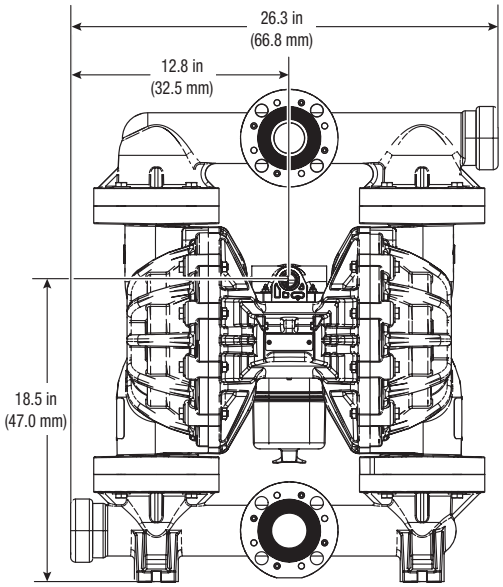

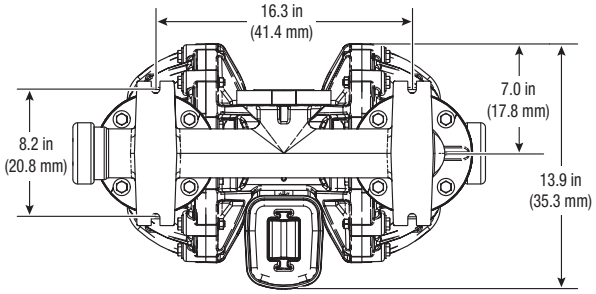

End Flange

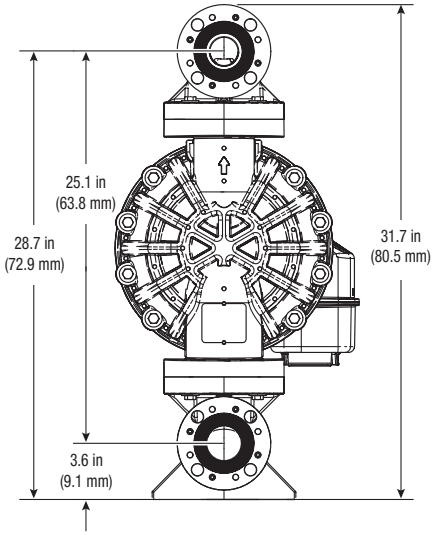

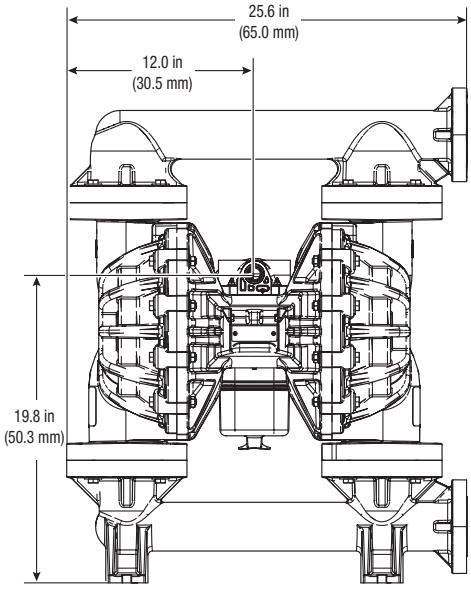

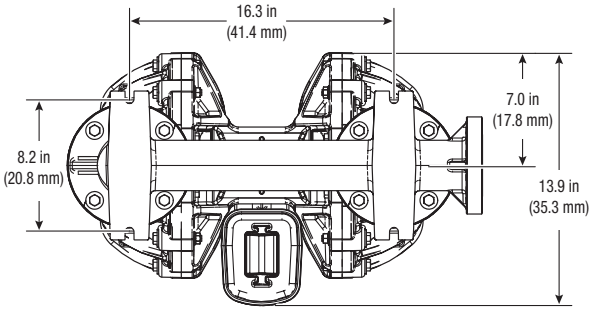

Husky 2200 Plastic Pumps

Performance Charts

Bolt Through Design

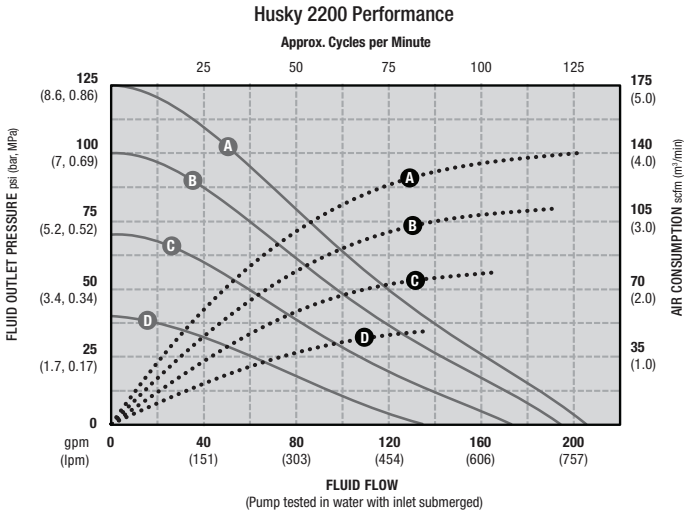

AIR PRESSURE	LEGEND
(A) = at 125 psi (8.3 bar, 0.83 MPa)	Air Consumption ·····
(B) = at 100 psi (7 bar, 0.7 MPa)	Fluid Pressure ——
(C) = at 70 psi (4.8 bar, 0.48 MPa)	
(D) = at 40 psi (2.8 bar, 0.28 MPa)	

Overmolded Design

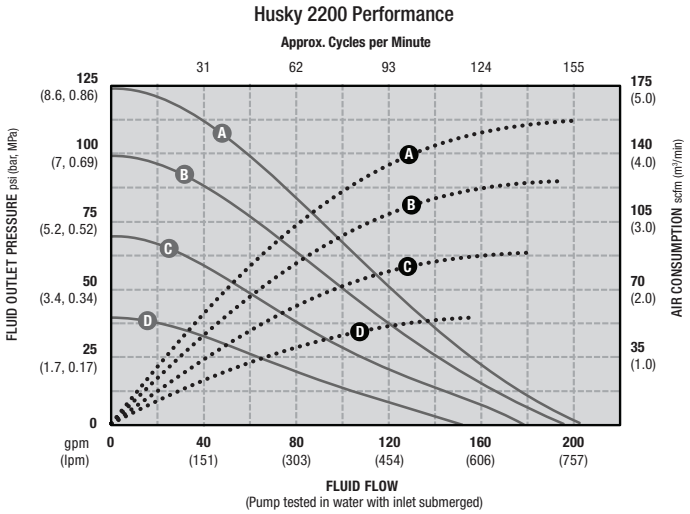

AIR PRESSURE	LEGEND
(A) = at 125 psi (8.3 bar, 0.83 MPa)	Air Consumption ·····
(B) = at 100 psi (7 bar, 0.7 MPa)	Fluid Pressure ——
(C) = at 70 psi (4.8 bar, 0.48 MPa)	
(D) = at 40 psi (2.8 bar, 0.28 MPa)	

Husky 3300 Selector Tool

To order a Husky 3300, use the online selector tool at **www.graco.com/pumpselectors** or contact your distributor.

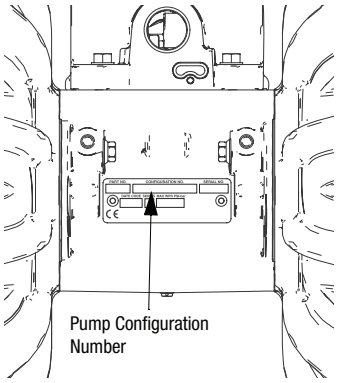

NOTE: Options for seats, check balls, diaphragms, and seals vary.

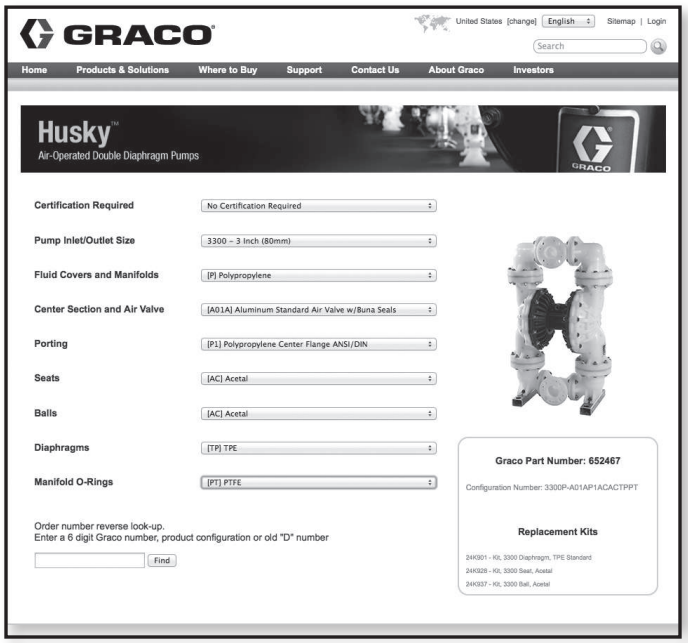

Example of Product Selector Tool on www.graco.com/pumpselectors

Pump Configuration Options

Pump (3 inch ports, 300 gpm)	Center Section and Air Valve Material		Air Valve/Monitoring	Fluid Covers and Manifolds	
P † Polypropylene 3300	Aluminum	**A01A**	Standard Diaphragms	**P1**	Polypropylene, center flange
		A01G	Overmolded Diaphragms		
	Polypropylene †	**P01A**	Standard Diaphragms		
		P01G	Overmolded Diaphragms		

†: See **ATEX Certifications** below.

Check Valve Seats		Check Valve Balls		Diaphragm		Manifold and Seat Seals	
AC	Acetal	**AC**	Acetal	**BN**	Buna-N	**---**	Models with Buna-N, FKM Fluoroelastomer or TPE seats do not use o-rings.
AL	Aluminum	**BN**	Buna-N	**CO**	Polychloroprene Overmolded		
BN	Buna-N	**CR**	Polychloroprene Standard	**CR**	Polychloroprene		
FK	FKM Fluoroelastomer	**CW**	Polychloroprene Weighted	**FK**	FKM Fluoroelastomer	**BN**	Buna-N
GE	Geolast®	**FK**	FKM Fluoroelastomer	**GE**	Geolast	**PT**	PTFE
PP	Polypropylene	**GE**	Geolast	**PO**	PTFE/EPDM Overmolded		
SP	Santoprene®	**PT**	PTFE	**PT**	PTFE/Santoprene Two-Piece		
SS	316 Stainless Steel	**SP**	Santoprene	**SP**	Santoprene		
TP	TPE	**TP**	TPE	**TP**	TPE		

ATEX Certifications

† Pumps with polypropylene fluid or center sections are not ATEX certified.

Husky 3300 Plastic Pumps

Popular Models

Material	Part Number	Materials for Seats	Materials for Balls	Materials for Diaphragms	Air Valve Replacement Kit	Seat Kit	Ball Kit	Diaphragm Kit	O-Ring Kit
Polypropylene	652404	Polypropylene	PTFE	2 pc PTFE	24K857	24K933	24K943	24K905	24K927
Polypropylene	652400	Polypropylene	Santoprene	Santoprene	24K857	24K933	24K944	24K902	24K927
Polypropylene	652423	Santoprene	Santoprene	Santoprene	24K857	24K934	24K944	24K902	24K927
Polypropylene	652414	Stainless Steel	PTFE	2 pc PTFE	24K857	24K935	24K943	24K905	24K927
Polypropylene	652402	Polypropylene	FKM	FKM	24K857	24K933	24K945	24K903	24K927

Technical Specifications

Husky 3300 Plastic Pumps	Polypropylene
Maximum fluid working pressure	100 psi (7.0 bar, 0.7 MPa)
Maximum free flow delivery*	
Standard diaphragms at 100 psi (7.0 bar, 0.7 MPa)	280 gpm (1,059 lpm)
Overmolded diaphragms at 100 psi (7.0 bar, 0.7 MPa)	260 gpm (984 lpm)
Maximum pump speed*	
Standard diaphragms at 100 psi (7.0 bar, 0.7 MPa)	97 cpm
Overmolded diaphragms at 100 psi (7.0 bar, 0.7 MPa)	130 cpm
Maximum suction lift * (varies widely based on ball/seat selection and wear, operating speed, material properties, and other variables)	8 ft (2.4 m) dry
Maximum size pumpable solids	0.5 in (13 mm)
Noise (dBa)***	
Sound Power at 50 psi (3.4 bar) and 50 cpm	92 dBa
Sound Power at 120 psi (8.3 bar) and full flow	99 dBa
Sound Pressure at 50 psi (3.4 bar) and 50 cpm	86 dBa
Sound Pressure at 120 psi (8.3 bar) and full flow	93 dBa
Maximum air consumption	275 scfm (7.8 m^3/min.)
Air pressure operating range	20 to 100 psi (1.4 to 7.0 bar, 0.14 to 0.7 MPa)
Air inlet size	3/4 npt(f)
Fluid inlet/outlet	3 in (76.2 mm) ANSI/DIN flange
Weight	200 lb (91 kg)
Instruction manual	3A0410
Repair/parts manual	3A0411

** Maximum values with water as media at ambient temperature. Water level is approximately 3 feet above pump inlet.*
*** Startup pressures and displacement per cycle may vary based on suction condition, discharge head, air pressure, and fluid type.*
**** Sound power measured per ISO-9614-2. Sound pressure was tested 3.28 ft (1 m) from equipment.*
**** Actual pump performance may be affected by prolonged usage at temperature*

Performance Charts

Husky 3300 Performance

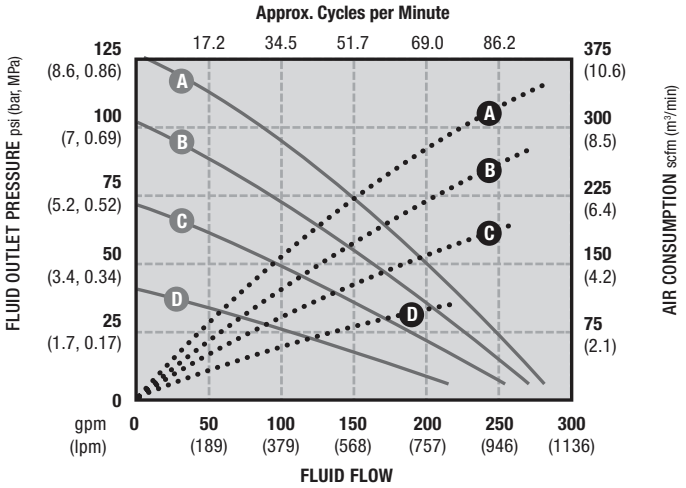

(Pump tested in water with inlet submerged)

AIR PRESSURE	LEGEND
(A) = at 125 psi (8.3 bar, 0.83 MPa)	Air Consumption •••••
(B) = at 100 psi (7 bar, 0.7 MPa)	Fluid Pressure ———
(C) = at 70 psi (4.8 bar, 0.48 MPa)	
(D) = at 40 psi (2.8 bar, 0.28 MPa)	

Dimensions

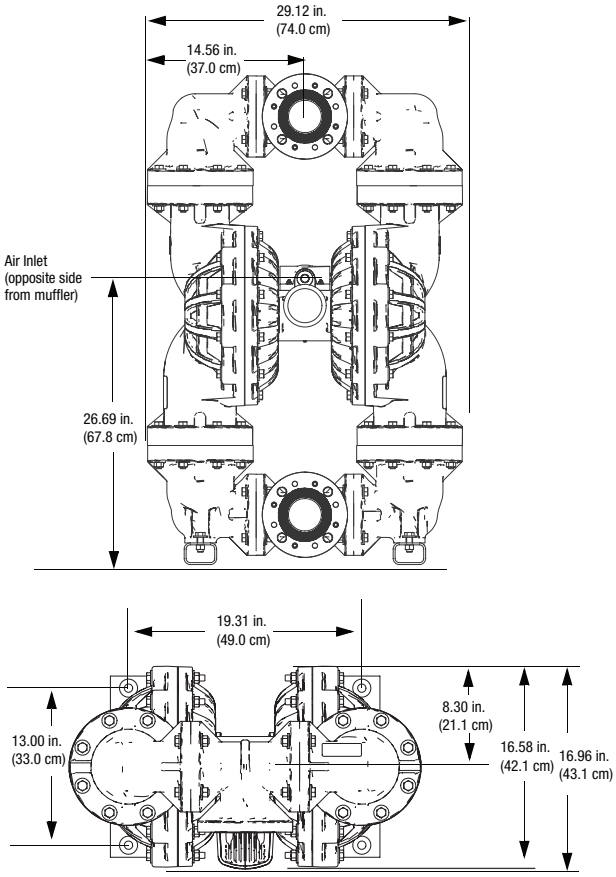

Typical System Drawings

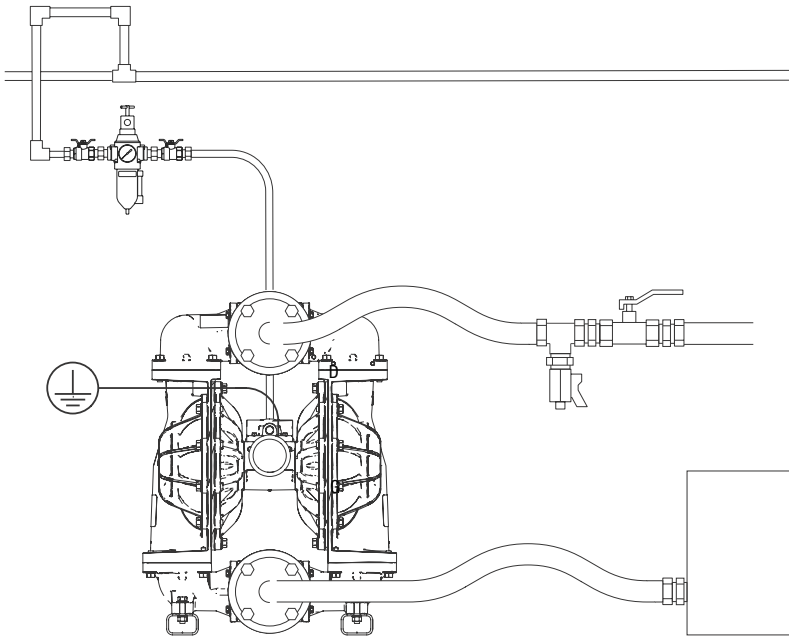

Husky 3300 Metal Pumps
Air-Operated Double Diaphragm

Husky 3300 Selector Tool

To order a Husky 3300, use the online selector tool at **www.graco.com/pumpselectors** or contact your distributor.

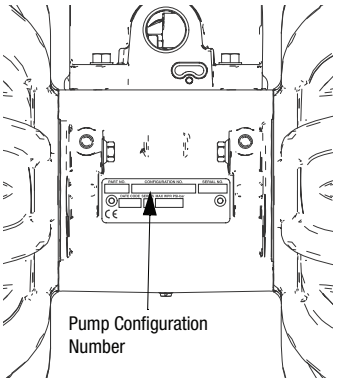

NOTE: Options for seats, check balls, diaphragms, and seals vary.

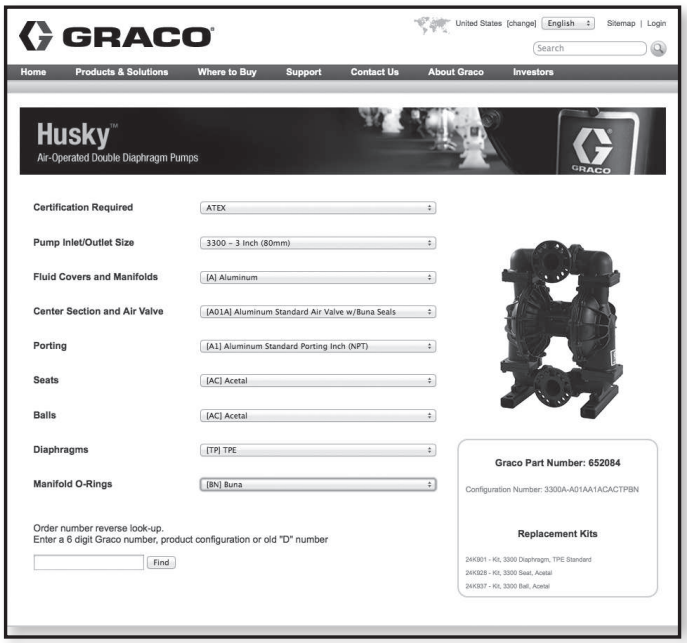

Example of Product Selector Tool on www.graco.com/pumpselectors

Pump Configurations

Pump (3 inch ports, 300 gpm)	Center Section and Air Valve Material		Air Valve/Monitoring	Fluid Covers and Manifolds	
A ★ Aluminum 3300	Aluminum	**A01A**	Standard Diaphragms	**A1**	Aluminum, center flange, npt
		A01E	Optional FKM seals with Standard Diaphragms	**A2**	Aluminum, center flange, bspt
S ★ Stainless Steel 3300		**A01G**	Overmolded Diaphragms	**S1**	Stainless steel, center flange, npt
	Polypropylene †	**P01A**	Standard Diaphragms	**S2**	Stainless steel, center flange, bspt
		P01G	Overmolded Diaphragms		

★: See **ATEX Certifications** below.

Check Valve Seats		Check Valve Balls		Diaphragm		Manifold and Seat Seals	
AC	Acetal	**AC**	Acetal	**BN**	Buna-N	**---**	Models with Buna-N, FKM Fluoroelastomer or TPE seats do not use o-rings.
AL	Aluminum	**BN**	Buna-N	**CO**	Polychloroprene Overmolded		
BN	Buna-N	**CR**	Polychloroprene Standard	**CR**	Polychloroprene		
FK	FKM Fluoroelastomer	**CW**	Polychloroprene Weighted	**FK**	FKM Fluoroelastomer	**BN**	Buna-N
GE	Geolast®	**FK**	FKM Fluoroelastomer	**GE**	Geolast	**PT**	PTFE
PP	Polypropylene	**GE**	Geolast	**PO**	PTFE/EPDM Overmolded		
SP	Santoprene®	**PT**	PTFE	**PT**	PTFE/Santoprene Two-Piece		
SS	316 Stainless Steel	**SP**	Santoprene	**SP**	Santoprene		
TP	TPE	**TP**	TPE	**TP**	TPE		

ATEX Certifications

★ Aluminum 3300 and Stainless Steel 3300 pumps with aluminum center sections are certified:

Ex **II 2 GD c IIC T4**

Popular Models

Material	Part Number	Seat Material	Ball Material	Diaphragm Material	Air Valve Replacement Kit	Seat Kit	Ball Kit	Diaphragm Kit	O-Ring Kit
Aluminum	652002	TPE	Acetal	TPE	24K855	24K932	24K937	24K901	24K909
Aluminum	652046	Geolast	Geolast	Geolast	24K855	24K931	24K939	24K900	24K909
Aluminum	652021	Stainless Steel	PTFE	2 pc PTFE	24K855	24K935	24K943	24K905	24K927
Aluminum	652081	Acetal	PTFE	2 pc PTFE	24K855	24K928	24K943	24K905	24K927
Aluminum	652036	Santoprene	Santoprene	Santoprene	24K855	24K934	24K944	24K902	24K909
Stainless Steel	652804	Stainless Steel	PTFE	2 pc PTFE	24K857	24K935	24K943	24K905	24K927
Stainless Steel	652812	Santoprene	Santoprene	Santoprene	24K857	24K934	24K944	24K902	24K927

Stainless Steel Flange Models*

Part Number	Outlet Orientation	Porting	Seat Material	Ball Material	Diaphragm Material	Air Valve	Seat Kit	Ball Kit	Diaphgram Kit
652989	Rotatable	Center	Stainless Steel	PTFE	PTFE	24K860	24K935	24K943	24K905
652990	Rotatable	Center	Santoprene	Santoprene	Santoprene	24K860	24K934	24K944	24K902
652991	Rotatable	Center	Stainless Steel	Santoprene	Santoprene	24K860	24K935	24K944	24K902

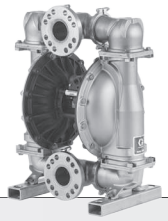

Technical Specifications

Husky 3300 Metal Pumps	Aluminum	Stainless Steel
Maximum fluid working pressure		
with Aluminum Center Section	125 psi (8.6 bar, 0.86 MPa)	125 psi (8.6 bar, 0.86 MPa)
with Polypropylene Center Section		100 psi (7.0 bar, 0.7 MPa)
Maximum free flow delivery*		
Standard diaphragms at 125 psi (8.6 bar, 0.86 MPa)	300 gpm (1,135 lpm)	300 gpm (1,135 lpm)
Standard diaphragms at 100 psi (7.0 bar, 0.7 MPa)	280 gpm (1,059 lpm)	280 gpm (1,059 lpm)
Overmolded diaphragms at 125 psi (8.6 bar, 0.86 MPa)	270 gpm (1,022 lpm)	270 gpm (1,022 lpm)
Overmolded diaphragms at 100 psi (7.0 bar, 0.7 MPa)	260 gpm (984 lpm)	260 gpm (984 lpm)
Maximum pump speed*		
Standard diaphragms at 125 psi (8.6 bar, 0.86 MPa)	103 cpm	103 cpm
Standard diaphragms at 100 psi (7.0 bar, 0.7 MPa)	97 cpm	97 cpm
Overmolded diaphragms at 125 psi (8.6 bar, 0.86 MPa)	135 cpm	135 cpm
Overmolded diaphragms at 100 psi (7.0 bar, 0.7 MPa)	130 cpm	130 cpm
Maximum suction lift * (varies widely based on ball/seat selection and wear, operating speed, material properties, and other variables)	8 ft (2.4 m) dry 28 ft (8.5 m) wet	8 ft (2.4 m) dry 28 ft (8.5 m) wet
Maximum size pumpable solids	0.5 in (13 mm)	0.5 in (13 mm)
Noise (dBa)***		
Sound Power at 50 psi (3.4 bar) and 50 cpm	92 dBa	92 dBa
Sound Power at 120 psi (8.3 bar) and full flow	99 dBa	99 dBa
Sound Pressure at 50 psi (3.4 bar) and 50 cpm	86 dBa	86 dBa
Sound Pressure at 120 psi (8.3 bar) and full flow	93 dBa	93 dBa
Maximum air consumption		
with Aluminum Center Section	335 scfm (9.5 m^3/min.)	335 scfm (9.5 m^3/min.)
with Polypropylene Center Section		275 scfm (7.8 m^3/min.)
Air pressure operating range		
with Aluminum Center Section	20 to 125 psi (1.4 to 8.6 bar, 0.14 to 0.86 MPa)	20 to 125 psi (1.4 to 8.6 bar, 0.14 to 0.86 MPa)
with Polypropylene Center Section		20 to 100 psi (1.4 to 7.0 bar, 0.14 to 0.7 MPa)
Air inlet size	3/4 npt(f)	3/4 npt(f)
Fluid inlet	3 in (76.2 mm) npt or bspt with ANSI/DIN flange	3 in (76.2 mm) npt or bspt
Weight	150 lb (68 kg)	255 lb (116 kg)
Instruction manual	3A0410	3A0410
Repair/parts manual	3A0411	3A0411

** Maximum values with water as media at ambient temperature. Water level is approximately 3 feet above pumpinlet.*
*** Startup pressures and displacement per cycle may vary based on suction condition, discharge head, air pressure, and fluid type.*
**** Sound power measured per ISO-9614-2. Sound pressure was tested 3.28 ft (1 m) from equipment.*

Husky 3300 Metal Pumps

Performance Charts

Husky 3300 Performance

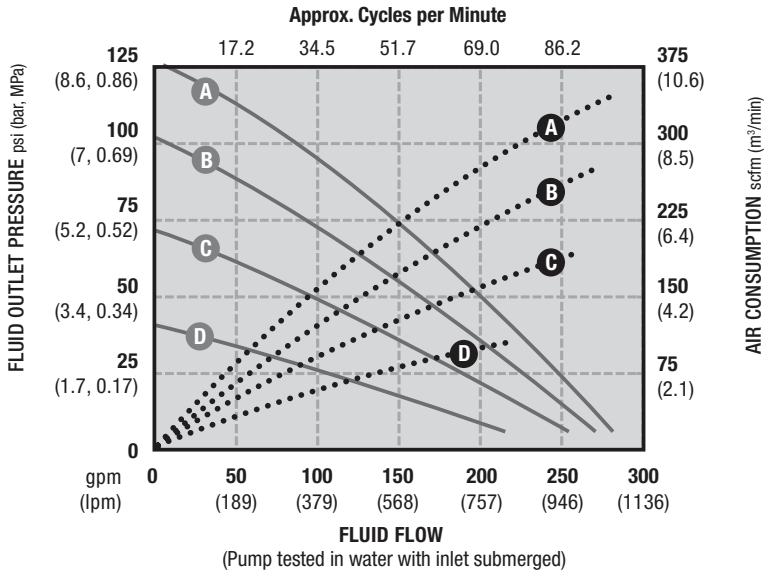

(Pump tested in water with inlet submerged)

AIR PRESSURE	LEGEND
Ⓐ = at 125 psi (8.3 bar, 0.83 MPa)	Air Consumption • • • • • •
Ⓑ = at 100 psi (7 bar, 0.7 MPa)	Fluid Pressure ———
Ⓒ = at 70 psi (4.8 bar, 0.48 MPa)	
Ⓓ = at 40 psi (2.8 bar, 0.28 MPa)	

Typical System Drawings

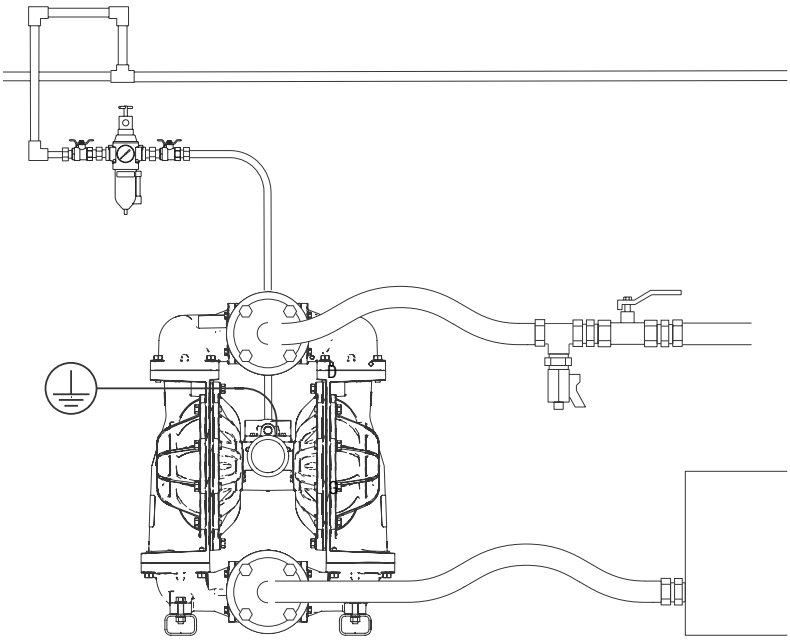

Dimensions

Aluminum

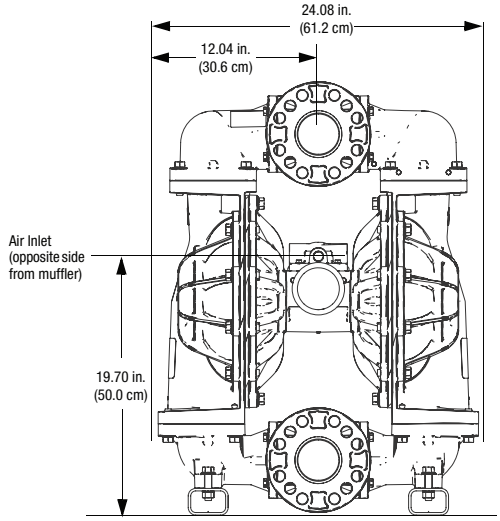

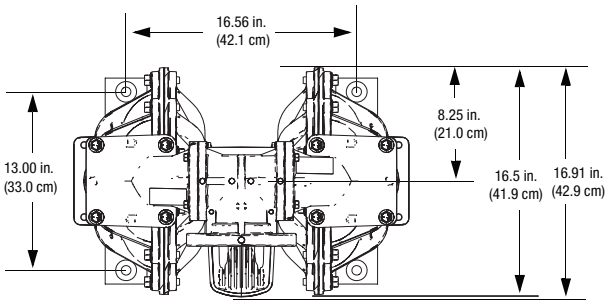

Stainless Steel

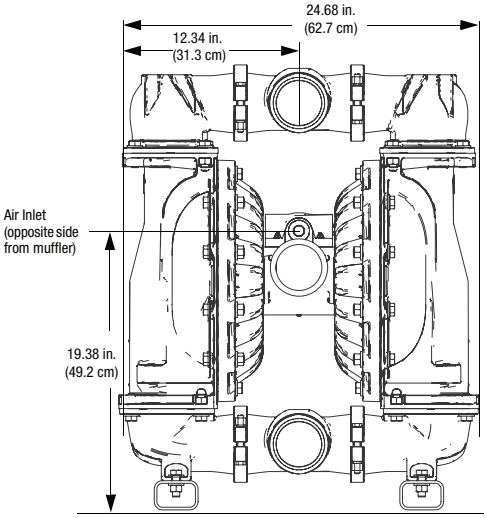

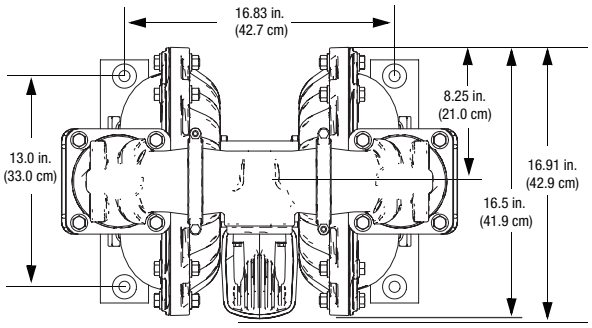

Husky Transfer Pump Packages
55 Gallon (208 liter) Size

Ordering Information

		Pump Components				Drum Kit Components			
Package Number	**Pump Type**	**Pump Number**	**Seats**	**Balls**	**Diaphragms**	**Drum Kit Number**	**Tube Material**	**Tube Part Number**	**Easy Out Seal and Mounting Base**
233051	Husky 515 Polypropylene	241565	Polypropylene	PTFE	PTFE	233045	Polypropylene	196096	233073
233052	Husky 515 Acetal	241564	Acetal	PTFE	PTFE	233047	Stainless Steel	196094	233074
233053	Husky 515 Acetal	241564	Acetal	PTFE	PTFE	233046	Aluminum	195095	233074
233054	Husky 716 Aluminum	243305	Acetal	Santoprene	Santoprene	233046	Aluminum	196095	233074
233055	Husky 716 Aluminum	243306	Acetal	Buna-N	Buna-N	233046	Aluminum	196095	233074
233056	Husky 716 Aluminum	243307	Acetal	PTFE	PTFE	233046	Aluminum	196095	233074
233057	Husky 716 Stainless Steel	D54311	Stainless Steel	PTFE	PTFE	233048	Stainless Steel	196094	233076

Dimensions

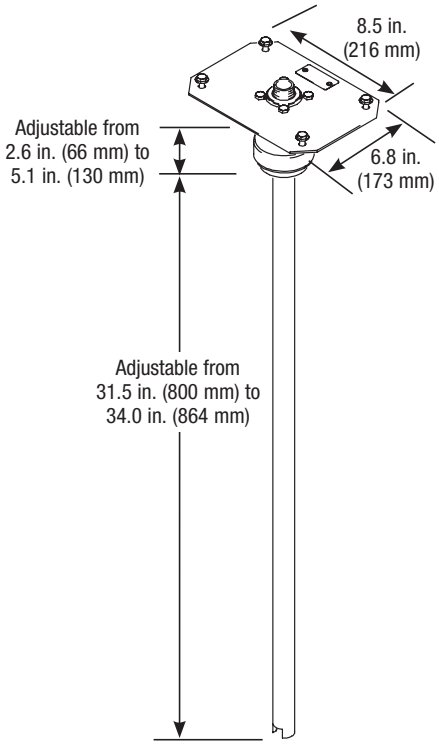

Poly, Acetal and Aluminum Pumps

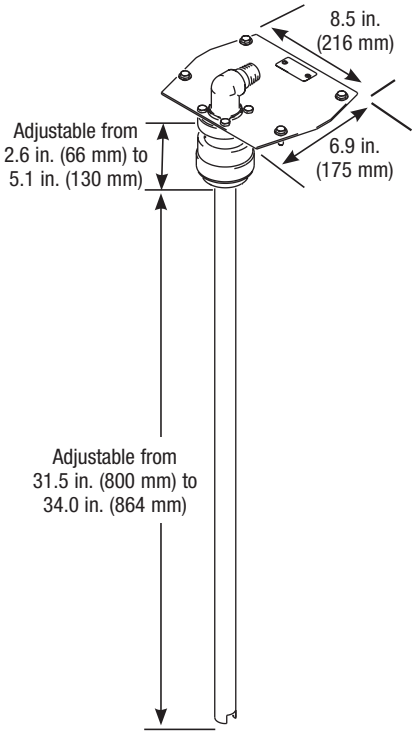

Stainless Steel Pumps

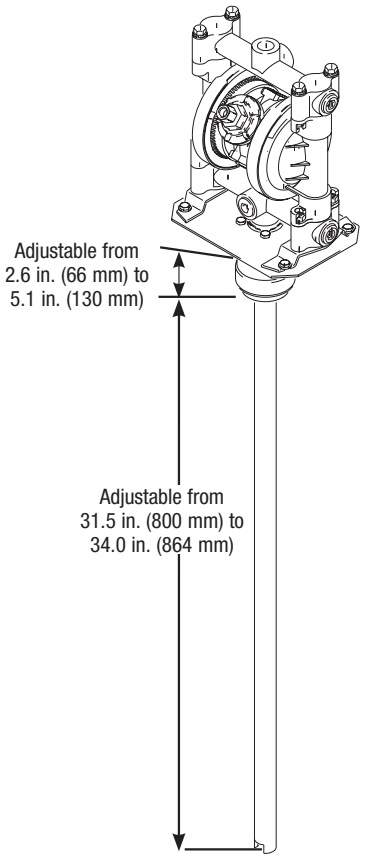

Overall height depends on pump.
See page 12 or 15 for pump dimensions

Technical Specifications

Husky 55 gal Transfer Pump	Acetal Husky 515		Polypropylene Husky 515	Aluminum Husky 716	Stainless Steel Husky 716	
Maximum fluid working pressure	100 psi (7 bar, 0.7 MPa)		100 psi (7 bar, 0.7 MPa)	100 psi (7 bar, 0.7 MPa)	100 psi (7 bar, 0.7 MPa)	
Maximum free flow delivery*	12 gpm (57 lpm)		12 gpm (57 lpm)	14 gpm (61 lpm)	14 gpm (61 lpm)	
Maximum pump speed	400 cpm		400 cpm	400 cpm	400 cpm	
Displacement per cycle**	0.04 gallon (0.15 liter)		0.04 gallon (0.15 liter)	0.04 gallon (0.15 liter)	0.04 gallon (0.15 liter)	
Maximum size pumpable solids	0.094 in (2.5 mm)		0.094 in (2.5 mm)	0.094 in (2.5 mm)	0.094 in (2.5 mm)	
Typical sound level at 70 psi (4.9 bar, 0.49 MPa) air @ 125 cpm	67 dBa		67 dBa	67 dBa	67 dBa	
Maximum air consumption	28 scfm (0.672 m3/min)		28 scfm (0.672 m3/min)	28 scfm (0.672 m3/min)	28 scfm (0.672 m3/min)	
Air pressure operating range	25 to 100 psi (1.8 to 7 bar, 0.18 to 0.7 MPa)		25 to 100 psi (1.8 to 7 bar, 0.18 to 0.7 MPa)	25 to 100 psi (1.8 to 7 bar, 0.18 to 0.7 MPa)	25 to 100 psi (1.8 to 7 bar, 0.18 to 0.7 MPa)	
Air inlet size	1/4 npt(f)		1/4 npt(f)	1/4 npt(f)	1/4 npt(f)	
Air exhaust port size	3/8 npt(f)		3/8 npt(f)	3/8 npt(f)	3/8 npt(f)	
Fluid inlet size	3/4 npt(f)		3/4 npt(f)	3/4 npt(f)	3/4 npt(f)	
Fluid outlet size	1/2 and 3/4 npt(f)		1/2 and 3/4 npt(f)	3/4 npt(f)	3/4 npt(f)	
Wetted parts (fluid covers and manifolds)	groundable acetal, PTFE		polypropylene, PTFE	aluminum, stainless steel, PTFE, zinc-plated steel	stainless steel, PTFE	
Pump weight	7.8 lb (3.5 kg)		6.5 lb (2.9 kg)	8.5 lb (3.9 kg)	18 lb (8.2 kg)	
Drum package weight tube material	12.3 lb (5.6 kg) aluminum	14.3 lb (6.5 kg) stainless steel	10.5 lb (4.8 kg) polypropylene	13.0 lb (5.9 kg) aluminum	27.5 lb (12.5 kg) stainless steel	
Drum kit weight easy-out seal material	4.5 lb (2.0 kg) aluminum	6.5 lb (2.9 kg) stainless steel	4.0 lb (1.8 kg) polypropylene	4.5 lb (2.0 kg) acetal	6.5 lb (2.9 kg) acetal	9.5 lb (4.3 kg) stainless steel
Drum package instruction manual	309116		309116	309116	309116	
Instruction manual	308981		308981	308981	308981	

** Flow rates are with muffler and do not vary based on diaphragm material*
*** Displacement per cycle may vary based on suction condition, discharge head, air pressure and fluid type*

Husky Transfer Pump Packages
Pump and Agitator Packages

Ordering Information

PART NUMBER	HUSKY 55 GAL (200 L) DISPENSING PACKAGE
231418	Husky 515 acetal pump 241564, stainless steel drum cover 238283, heavy-duty agitator 238157, air-powered drum cover elevator 237746, air controls, hose and dispense valve
231419	Husky 515 acetal pump, stainless steel drum cover, heavy-duty agitator, drum cover elevator

PART NUMBER	HUSKY TWISTORK® PACKAGE
238859	Husky 515 D52911 Polypropylene pump mounted on Twistork
238860	Husky 515 D51911 Acetal pump mounted on Twistork

Technical Specifications

Husky 515 on Twistork Agitator	
Maximum air input pressure	100 psi (7 bar)
Maximum fluid output pressure	100 psi (7 bar)
Maximum siphon flow rate with 100 cps material with 1000 cps material	 12 gpm (45.4 lpm) 1.2 gpm (4.54 lpm)
Air inlet	Quick-coupler, nipple (pin)
Fluid outlet size	3/4 npt(f)
Maximum recommended agitator speed	800 rpm
Agitator air consumption at 400 rpm at 800 rpm	 2.5 scfm (0.07 m3 /min) 5.7 scfm (0.16 m3 /min)
Pump air consumption at 12 gpm (45.4 lpm)	approximately 12 scfm (0.34 m3 /min)
Maximum operating temperature	150º F (66º C)
Weight	32 lb (14.5 kg)
Maximum noise level*	85 dB(A)
Instruction manual	308656

** Tested to CAGI-PNEUROP–1969*

Dimensions

Husky 55 gal Dispensing Package

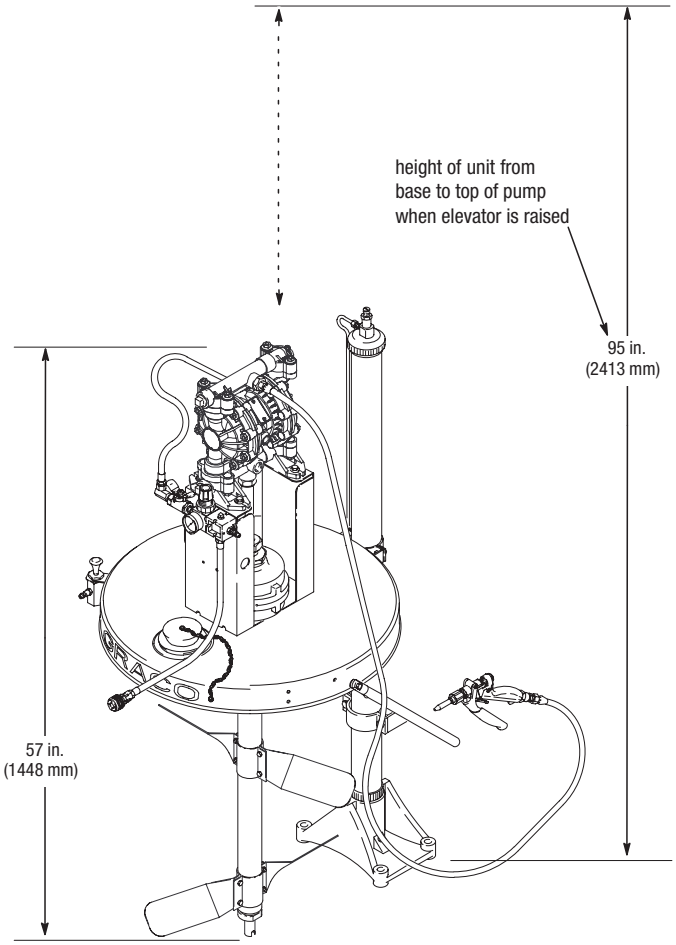

Elevator Base
Mounting Hole Layout

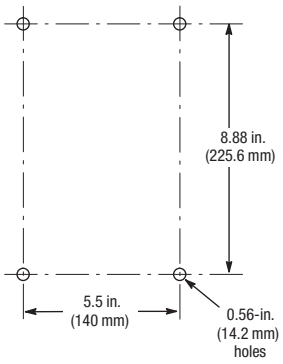

Husky Twistork Package

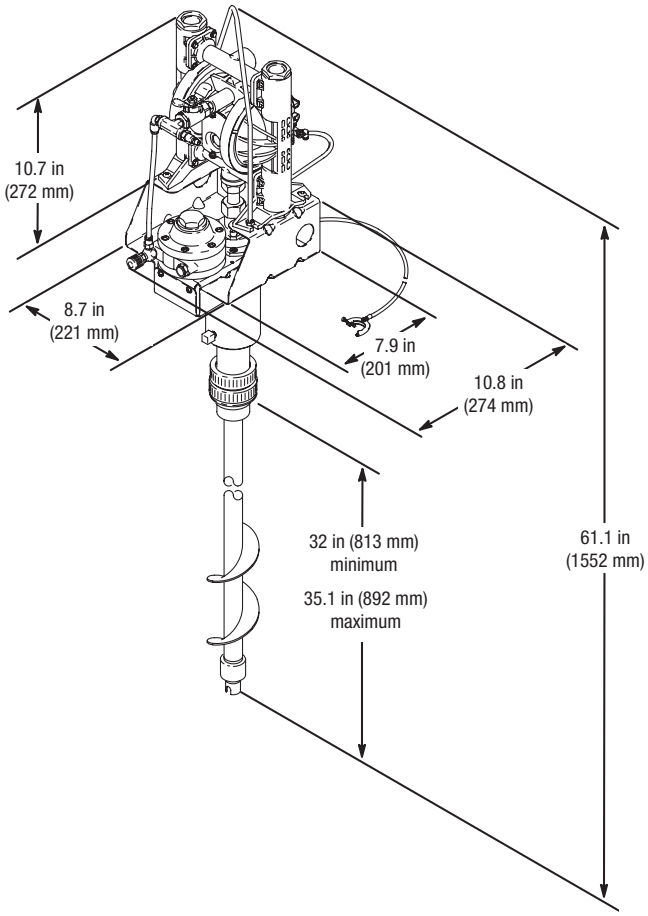

Husky 205 Accessories

	Part Number
AIR CONTROLS	
Regulator / Filter Assembly 1/4” npt(f) (6.35 mm)	246946
Quick Connect Air Coupler 1/4” npt (6.35 mm)	208536
Quick Connect Air Nipple 1/4” npt (6.35 mm) mbe	169970
Air Shut Off Valve 1/4” npt (6.35mm), bleed type, relieves trapped air downline of valve	110223
Air Runaway Valve (stops pump from cavitating when empty)	224040
Air Muffler (comes with pump)	114174
55-GALLON SIPHON KITS	
Polypropylene Suction Kit (includes siphon hose, tube and connectors)	239142
Acetal Suction Kit (includes siphon hose, tube and connectors)	239143
PVDF Suction Kit (includes siphon hose, tube and connectors)	239144
REMOTE PUMP CONTROLLERS	
CycleFlo (cpm rate and batch control) 100-240v	195264
CycleFlo II (rate controller with solenoid valve) 120v	195265

Husky 307 Accessories

AIR CONTROLS	
Regulator / Filter Assembly 1/4” npt(f) (6.35 mm)	246946
Quick Connect Air Coupler 1/4” npt (6.35 mm)	208536
Quick Connect Air Nipple 1/4” npt (6.35 mm) mbe	169970
Air Shut Off Valve 1/4” npt (6.35 mm), bleed type, relieves trapped air downline of valve	110223
Air Runaway Valve (stop pump from cavitating when empty)	224040
Air Muffler (comes with pump)	112933
55-GALLON SIPHON KITS	
Polypropylene Suction Kit (includes siphon hose, tube and connectors)	235502
Acetal Suction Kit (includes siphon hose, tube and connectors)	235500
REMOTE PUMP CONTROLLERS	
Husky 307 pumps are not equipped to run in remote mode	N/A

SPLIT MANIFOLD KITS

By varying the manifold kits, pumps can be configured in different ways (one inlet and two outlets, two inlets and one outlet, and two inlets and two outlets, etc), allowing for system flexibility. Pumps need to be ordered separately. One kit is required for each side (top or bottom). See 308439 for details.

Acetal Split Manifold Kit	237211
Polypropylene Split Manifold Kit	237210
Rubber Foot Kit	236452
WALL MOUNTING BRACKET	
Wall mounting bracket for Husky 307 pumps	224835

Husky 515 and Husky 716 Accessories

	Part Number
AIR CONTROLS	
Regulator / Filter Assembly 1/4” npt(f) (6.35 mm)	246946
Quick Connect Air Coupler 1/4” npt (6.35 mm)	208536
Quick Connect Air Nipple 1/4” npt (6.35 mm) mbe	169970
Air Shut Off Valve 1/4” npt (6.35 mm), bleed type, relieves trapped air downline of valve	110223
Air Runaway Valve (stop pump from cavitating when empty)	224040
Air Muffler (comes with pump)	112933
Center Section Conversion Kit (converts an old style Husky 715 to a Husky 515/716)	241631
Center Section Conversion Kit (converts an old remote style Husky 715 to a Husky 515/716)	241664
55-GALLON SIPHON KITS	
Drum Kit (includes “easy out seal” mounting base and siphon tube). Pump models can be mounted to base, but may require opening bottom inlet. See 309116 for details.	
Mounting Base with a Polypropylene Siphon Tube	233045
Mounting Base with a Aluminum Siphon Tube	233046
Mounting Base with a Stainless Steel Siphon Tube (used with non sst pumps)	233047
Mounting Base with a Stainless Steel Siphon Tube (for sst pump only)	233048
REMOTE PUMP CONTROLLERS	
CycleFlo (cpm rate and batch control) 100-240v	195264
CycleFlo II (rate controller with solenoid valve) 120v	195265
SPLIT MANIFOLD KITS (HUSKY 515 ONLY)	
By varying the manifold kits, pumps can be configured in different ways (one inlet and two outlets, two inlets and one outlet, and two inlets and two outlets, etc), allowing for system flexibility. Pumps need to be ordered separately. See manual 308951 for details.	
Polypropylene Inlet Manifolds	241240
Polypropylene Outlet Manifolds	241243
Acetal Inlet Manifolds	241241
Acetal Outlet Manifolds	241244
PVDF Inlet Manifolds	241242
PVDF Outlet Manifolds	241245
WALL MOUNTING BRACKET	
Wall mounting bracket for Husky 515 & Husky 716 pumps	224835
MISCELLANEOUS ACCESSORIES	
Duckbill Replacement Parts (urethane) for 515 and 716 Husky Pumps	239754
SURGE SUPPRESSORS	
Surge suppressors are designed to reduce the pulsation caused during pump changeover. The suppressor construction is generally closely matched with the pump’s material (Stainless Steel with Stainless Steel, Acetal with Aluminum, etc.) and are available in either an adjustable or automatic version. See 308703 for details.	
Automatic Husky 750, 3/4” (19.05 mm)	
Polypropylene (wetted bottom and top housings) with a Buna-N bladder	239096
with PTFE bellows	239121
with a Fluoroelastomer bladder	239122

Husky 515 and Husky 716 Accessories (continued)

	Part Number
SURGE SUPPRESSORS (CONTINUED)	
Stainless Steel (wetted bottom and top housings) with a Buna-N bladder	239095
with PTFE bellows	239123
with a Fluoroelastomer bladder	239124
Acetal (wetted bottom and top housings) with a Buna-N bladder	239094
with PTFE bellows	239125
Adjustable Husky 750, 3/4" (19.05 mm)	
Polypropylene (wetted bottom and top housings) with a Buna-N bladder	239091
with PTFE bellows	239129
with a Fluoroelastomer bladder	239130
Stainless Steel (wetted bottom and top housings) with a Buna-N bladder	239090
with PTFE bellows	239131
with a Fluoroelastomer bladder	239132
Acetal (wetted bottom and top housings) with a Buna-N bladder	239089
with PTFE bellows	239133
PTFE/EPDM OVERMOLDED DIAPHRAGMS	
Industrial upgrade kits – includes new airside diaphragm plate	
Upgrade kit for 0.5 in (1.27 cm) and 0.75 in (1.905 cm) pump	24N321
LEAK DETECTOR	
Leak detectors are designed to shut off the pump in the event a diaphragm fails. The leaking material flows out the air section and is captured by the leak detector reservoir. Once the reservoir is filled, a signal is sent that would shut off the pump. These detectors should only be used when a massive failure is allowed.	
Polypropylene Housings with PVC Wetted Parts	239080
Shut Off Valve Kit (used in conjunction with 239080)	113870

Husky 1050, 1050HP, 1590, 15120, 2150, 2200 Accessories

AIR CONTROLS	
Regulator / Filter Assembly 1/2" npt(f) (12.7 mm)	246947
Quick Connect Air Coupler 1/2" npt (12.7 mm)	110199
Quick Connect Air Nipple 1/2" npt (12.7 mm) mbe	110196
Air Shut Off Valve 1/2" npt (12.7mm), bleed type, relieves trapped air downline of valve	110225
Air Runaway Valve (stop pump from cavitating when empty)	224040
Air Muffler (comes with pump) 1050 pumps	24D642
Air Muffler (comes with pump) 1590 and 2150 pumps	102656
Center Section Conversion Kit (converts an aluminum center section to sst. Includes air covers).	
Husky 1590	246451
Husky 2150	246452
55-GALLON SIPHON KIT	
Siphon kit is used for drawing fluids from 55-gallon sized containers, through a 2" bung opening.	
Kit comes with carbon steel tube, 8' (2.44m) polyethylene hose and couplings	222916
REMOTE PUMP CONTROLLERS	
CycleFlo (cpm rate and batch control) 100-240v	195264
CycleFlo II (rate controller with solenoid valve) 120v	195265
DUAL INLET MANIFOLD	
Aluminum Husky 1050 only	24D205
CONVERSION KITS	
Remote Valve Conversion Kit for Aluminum Husky 1050 only	24D037
Remote Valve Conversion Kit for Polypropylene Husky 1050 only	24D038
Remote Valve Conversion Kit for Conductive Polypropylene Husky 1050 only	24D039

Husky 1050, 1050HP, 1590, 15120, 2150, 2200 Accessories (continued)

	Part Number
SURGE SUPPRESSORS	

Surge suppressors are designed to reduce the pulsation caused during pump changeover. The suppressor construction is generally closely matched with the pump's material (Stainless Steel with Stainless Steel, Acetal with Aluminum, etc.) and are available in either an adjustable or automatic version. See 308703 for details.

Automatic Husky 2000, 2 in (50.8 mm)	
Polypropylene (wetted bottom and top housings) with a Buna-N bladder	239092
with PTFE bellows	239128
Stainless Steel (wetted bottom and top housings) with a Buna-N bladder	239093
with PTFE bellows	239126
with a Fluoroelastomer bladder	239127
Adjustable Husky 2000, 2 in (50.8 mm)	
Polypropylene (wetted bottom and top housings) with a Buna-N bladder	239087
with PTFE bellows	239136
Stainless Steel (wetted bottom and top housings) with a Buna-N bladder	239088
with PTFE bellows	239134
with a Fluoroelastomer bladder	239135

PTFE/EPDM OVERMOLDED DIAPHRAGMS

Industrial upgrade kits – includes new airside diaphragm plate

Upgrade kit for 1 inch (2.54 cm) Husky 1040 pump	289224
Upgrade kit for 1 inch (2.54 cm) Husky 1050 pump	24B626
Upgrade kit for 1.5 inch (3.81 cm) pump	289225
Upgrade kit for 2 inch (5.08 cm) pump	289226

LEAK DETECTOR

Leak detectors are designed to shut off the pump in the event a diaphragm fails. The leaking material flows out the air section and is captured by the leak detector reservoir. Once the reservoir is filled, a signal is sent that would shut off the pump. These detectors should only be used when a massive failure is allowed.

Polypropylene Housings with PVC Wetted Parts	239080
Shut Off Valve Kit (used in conjunction with 239080)	113870

WALL MOUNTING BRACKET

Wall mounting bracket for Husky 1050 pumps	24C637
Dampener repair kit for feet mounting on the wall bracket	236452
Isolator replacement kit (SPR 9026)	24E769

MISCELLANEOUS ACCESSORIES

Flange Kits. Used to transition a flanged pump to a npt connection to transition from a threaded connection to a flange. It is recommended that the flange kit be compatible with the pump material.

Polypropylene 1 inch (24.14 mm) flange for Husky 1050 D72XXX pumps. 1" ANSI x 1" npt (f)	239005
Stainless Steel 1 inch (24.14 mm) flange for Husky 1050 D71XXX and D74XXX pumps 1" ANSI x 1" npt (f)	239008
PVDF 1 inch (24.14 mm) flange for Husky 1050 D75XXX pump 1" ANSI x 1" npt (f)	239009
Polypropylene 1-1/2 inch (36.84 mm) flange for Husky 1590 DB2XXX pump 1-1/2" ANSI x 1-1/2" (f)	239006
PVDF 1-1/2 inch (36.84 mm) flange for Husky 1590 DB5XXX pump. 1-1/2" ANSI x 1-1/2" (f)	239010
Polypropylene 2 inch (48.28 mm) flange for Husky 2150 DF2XXX pump. 2" ANSI x 2" (f)	239007
PVDF 2 inch (48.28 mm) flange for Husky 2150 DF5XXX pump 2" ANSI x 2" (f)	239011

Husky Pump Accessories

Husky 3300 Accessories

AIR CONTROLS

Regulator / Filter Assembly 3/4” npt(f) (19.5 mm)	246948
Quick Connect Air Coupler 3/4” npt (19.5 mm)	110200
Quick Connect Air Nipple 3/4” npt (19.5 mm) mbe	110197
Air Shut Off Valve 3/4” npt (19.5 mm), bleed type, relieves trapped air downline of valve	110226
Air Runaway Valve (stop pump from cavitating when empty)	224040
Air Muffler (comes with pump)	111897

55-GALLON SIPHON KITS

Typically, 3” pumps are not used for emptying 55-gallon containers	N/A

REMOTE PUMP CONTROLLERS

Husky 3300 pumps are not equipped to run in remote mode	N/A

SPLIT MANIFOLD KITS

There are no Husky 3300 with a split manifold option	N/A

SURGE SUPPRESSORS

Surge suppressors are designed to reduce the pulsation caused during pump changeover. The suppressor construction is generally closely matched with the pump’s material (Stainless Steel with Stainless Steel, Acetal with Aluminum, etc.) and are available either in adjustable or automatic version. See 308703 for details.

Automatic Husky 2000, 2 in (50.8 mm)	
Polypropylene (wetted bottom and top housings) with a Buna-N bladder	239092
with PTFE bellows	239128
Adjustable Husky 2000, 2 in (50.8 mm)	
Polypropylene (wetted bottom and top housings) with a Buna-N bladder	239087
with PTFE bellows	239136

Popular Industrial Pump Combinations with PTFE/EPDM Overmolded Diaphragms*

Pump Part No.	Pump Size	Air Motor	Fluid Section	Seats	Balls	Threads
24N093	0.5 in	Poly	Poly	Poly	PTFE	NPT
24N094	0.5 in	Poly	Poly	Poly	PTFE	BSPT
24N095	0.5 in	Poly	PVDF	PVDF	PTFE	NPT
24N096	0.5 in	Poly	Acetal	Acetal	PTFE	NPT
24N097	0.5 in	Poly	Acetal	SST	SST	NPT
24N098	0.5 in	Poly	Acetal	Acetal	PTFE	BSPT
24N257	0.75 in	Poly	AL	Acetal	PTFE	NPT
24N258	0.75 in	Poly	AL	SST	PTFE	NPT
24N259	0.75 in	Poly	AL	SST	SST	NPT
24N260	0.75 in	Poly	SST	Acetal	PTFE	NPT
24N261	0.75 in	Poly	SST	SST	PTFE	NPT
24N262	0.75 in	Poly	SST	SST	SST	NPT
649020	1.0 in	Poly	Poly	SST	PTFE	NPT
651011	1.0 in	AL	SST	SST	PTFE	NPT
649385	1.0 in	Poly	PVDF	PVDF	PTFE	NPT
647022	1.0 in	AL	AL	SST	SST	NPT
647032	1.0 in	AL	AL	SST	PTFE	NPT
649007	1.0 in	Poly	Poly	Poly	PTFE	Center Flange
649035	1.0 in	Poly	Poly	Poly	PTFE	End Flange
649399	1.0 in	Poly	PVDF	PVDF	PTFE	End Flange
651005	1.0 in	AL	SST	SST	SST	NPT
651034	1.0 in	AL	SST	SST	PTFE	BSPT
651163	1.0 in	Poly	SST	SST	PTFE	NPT

Pump Part No.	Pump Size	Air Motor	Fluid Section	Seats	Balls	Threads
24B781	1.5 in	AL	SST	SST	PTFE	NPT
24B761	1.5 in	AL	Poly	SST	PTFE	End Flange
24B760	1.5 in	AL	Poly	Poly	PTFE	End Flange
24B780	1.5 in	SST	SST	SST	PTFE	NPT
24G411	1.5 in	AL	AL	SST	PTFE	BSPT
24J358	1.5 in	AL	AL	SST	PTFE	NPT
24J359	1.5 in	AL	AL	SST	Acetal	NPT
24B801	2.0 in	AL	SST	SST	PTFE	NPT
24B782	2.0 in	AL	AL	SST	PTFE	NPT
24B765	2.0 in	AL	Poly	SST	PTFE	End Flange
24B764	2.0 in	AL	Poly	Poly	PTFE	End Flange
24B783	2.0 in	SST	SST	SST	PTFE	NPT
24J360	2.0 in	AL	AL	SST	Acetal	NPT
24G413	2.0 in	AL	AL	SST	PTFE	BSPT
25A149	2.0 in	AL	Cast Iron	SST	PTFE	NPT
25A150	2.0 in	AL	Cast Iron	SST	Geolast	NPT
25A151	2.0 in	AL	Cast Iron	SST	Santo	NPT

** Over 500 industrial pump models available with overmolded diaphragm options. Visit Husky pump selector at www.graco.com/processpumpselector for more configuration models.*

Ordering Information

195264 CycleFlo Pneumatic pump controller, 100-240V
195265 CycleFlo II Pneumatic pump controller, 120V
309003 CycleFlo Instruction Manual
309004 CycleFlo II Instruction Manual

Product Selector

Highlighted areas indicate the different sizes of remote pumps and available materials of construction for seats, balls and diaphragms that can be used with the CycleFlo and CycleFlo II controller.

PUMP SIZE (AIR MOTOR TYPE AND MATERIAL)	WETTED PARTS	SEATS	BALLS	DIAPHRAGM
2 = 1/4" (6.35 mm) Remote: polypropylene center section	1 = Acetal (NPT)	0 = Seat with ball	1 = PTFE	1 = PTFE
4 = 1/2" (12.7 mm) Remote: polypropylene center section	2 = Poly (NPT)	2 = Acetal	2 = Acetal	5 = TPE
4 = 3/4" (19.05 mm) Remote: polypropylene center section	3 = Aluminum (NPT)	3 = Stainless Steel	3 = Stainless Steel	6 = Santoprene
C = 1-1/2" (38.1 mm) Remote: aluminum center section	4 = Stainless Steel (NPT)	4 = Hardened SST	4 = Hardened SST	7 = Buna-N
U = 1-1/2" (38.1 mm) Remote: stainless steel center section	5 = PVDF (NPT)	5 = TPE	5 = TPE	8 = Fluoroelastomer
G = 2" (50.8 mm) Remote: aluminum center section	6 = Ductile Iron (NPT)	6 = Santoprene	6 = Santoprene	G = Geolast
		7 = Buna-N	7 = Buna-N	
	A = Acetal * (BSPT)	8 = Fluoroelastomer	8 = Fluoroelastomer	
	B = Poly * (BSPT)	9 = Polypropylene	9 = Polypropylene	
	C = Aluminum (BSPT)	A = PVDF	A = PVDF	
	D = Stainless Steel (BSPT)	G = Geolast	G = Geolast	
	E = PVDF (BSPT)			
	F = Ductile Iron (BSPT)	B = SST with viton seal		
		C = Santoprene with viton seal		
	H = 2 npt Alum Extended			
	G = 2 bsp Alum Extended	D = Urethane Duckbill		

Mounting Dimensions

CycleFlo

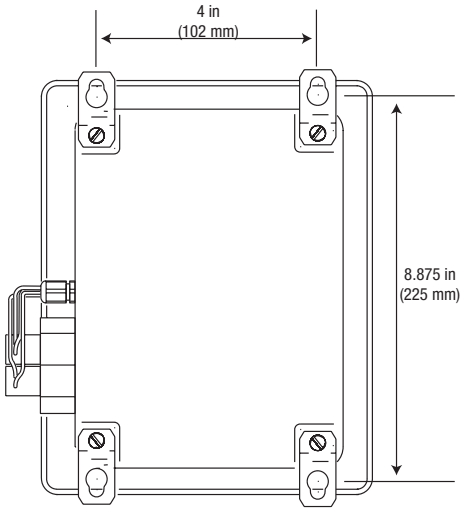

CycleFlo II

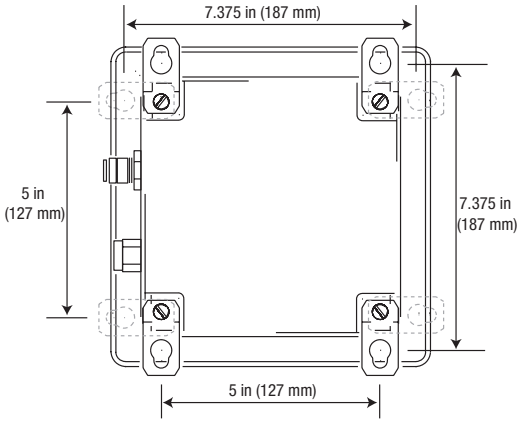

How To Determine The Best Remote Pump:

1. Configure the best seat, ball and diaphragm combination, as well as fluid wetted parts, based on material compatibility and application requirements.
   - If the material is a mild acid, the choice could be a DX2911.
2. Determine dispense time and volume accuracy.
   - In two minutes, 50 gallons need to be dispensed ±5% accuracy
3. Use the displacement volume chart below to choose the pump size with an outlet volume/cycle that is most closely divisible into your required flow.*
   - Husky 1590 produces .5 gal/cycle
   - Husky 2150 produces 1.03 gal/cycle

Volume/cycle	Husky 205 1/4 in	Husky 515 1/2 in	Husky 716 3/4 in	Husky 1050 1 in	Husky 1050HP 1 in	Husky 1590 1-1/2 in	Husky 15120 1-1/2 in	Husky 2150 2 in	Husky 2200 2 in
Cubic centimeters (cc)	46	150	150	644	644	1960	2384	3000	6056
Liters	0.05	0.15	0.15	0.64	0.64	1.96	2.4	3.9	6.1
Grams (assumes s.g =1.0)	46	150	150	644	644	1960	2385	3900	6057
Kilograms (kg)	0.05	0.15	0.15	0.64	0.64	1.96	2.38	3.9	6.06
Gallons	0.01	0.04	0.04	0.17	0.17	0.5	0.63	1.03	1.6
Quarts	0.05	0.16	0.16	0.68	0.68	2	2.52	4.12	6.4
Pints	0.1	0.32	0.32	1.36	1.36	4	5.04	8.24	12.8
Ounces	1.54	5.12	5.12	21.8	21.8	64	80.64	131.84	204.8
Cubic inch	2.77	9.24	9.24	39.27	39.27	115.5	145.53	237.93	369.6

4. Determine the number of cycles required. Calculate the dispense time by dividing required flow by outlet volume per cycle.
   - Husky 1590 = 50 gal/0.5 gal/cycle = 100 cycles
   - Husky 2150 = 50 gal/1.03 gal/cycle = 48.55 cycles
5. Determine if cycle output is within the dispense accuracy required.
   - Husky 2150 requires 48.55 cycles to pump 50 gallons. Only full cycles are possible, so either 48 or 49 cycles can be counted. At the 48 cycle count, dispense would be 49.44 gallons. At the 49 cycle count, dispense would be 50.47 gallons.
   - Husky 1590 requires 100 cycles to pump 50 gallons. No partial cycles required.
6. After determining the best size, use the pump ordering matrix to decide which remote center section is most suitable for the application – DC2911 (aluminum center section) or DU5911 (stainless steel center section).
   - Since a mild acid is being pumped, DC2911, an aluminum center section would be the best choice.

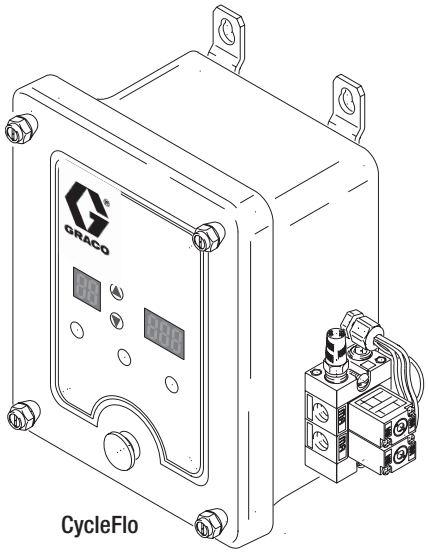

CycleFlo

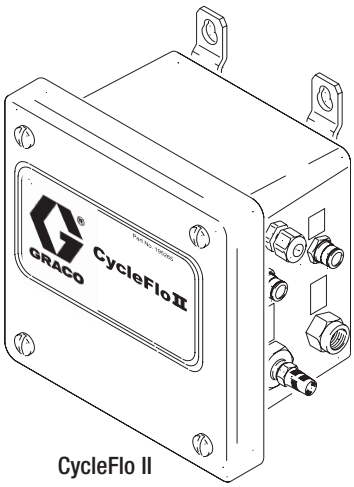

CycleFlo II

* Displacement values are estimates based on average running conditions.

Ordering Information

Husky 750, 3/4 in npt(f) Surge Suppressors

Automatic	Polypropylene wetted bottom housing and non-wetted top housing	Stainless Steel wetted bottom housing and non-wetted top housing
Weight	9 lb (4.1 kg)	16 lb (7.3 kg)
Suppressor with Buna-N bladder	239096	239095
Suppressor with PTFE bellows	239121	239123
Suppressor with Fluoroelastomer bladder	239122	239124
Adjustable	**Polypropylene** wetted bottom housing and non-wetted top housing	**Stainless Steel** wetted bottom housing and non-wetted top housing
Weight	9 lb (4.1 kg)	16 lb (7.3 kg)
Suppressor with Buna-N bladder	239091	239090
Suppressor with PTFE bellows	239129	239131
Suppressor with Fluoroelastomer bladder	239130	239132

Husky 2000, 2 in npt(f) Surge Suppressors

Automatic	Polypropylene wetted bottom housing and non-wetted top housing	Stainless Steel wetted bottom housing, polypropylene non-wetted top housing
Weight	18 lb (8.2 kg)	36 lb (16.3 kg)
Suppressor with Buna-N bladder	239092	239093
Suppressor with PTFE bellows	239128	239126
Suppressor with Fluoroelastomer bladder	n/a	239127
Adjustable	**Polypropylene** wetted bottom housing and non-wetted top housing	**Stainless Steel** wetted bottom housing, polypropylene non-wetted top housing
Weight	18 lb (8.2 kg)	36 lb (16.3 kg)
Suppressor with Buna-N bladder	239087	239088
Suppressor with PTFE bellows	239136	239134
Suppressor with Fluoroelastomer bladder	n/a	239135

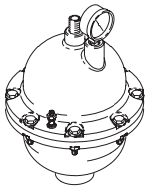

239095
Automatic

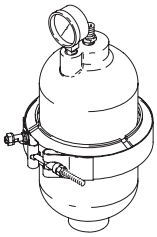

239096
Automatic

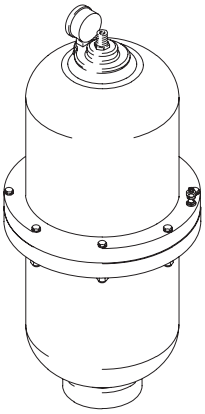

239126
Automatic

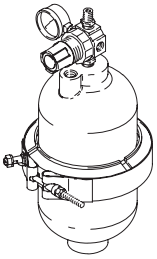

239091
Adjustable

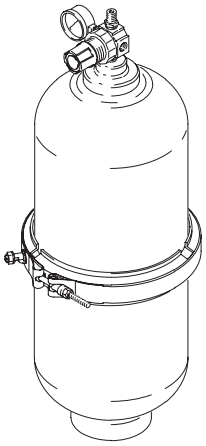

239088
Adjustable

Technical Specifications

Surge Suppressors	Husky 750	Husky 2000
Max. air input pressure	120 psi (0.84 MPa, 8.4 bar)	120 psi (0.84 MPa, 8.4 bar)
Air line connection	1/4 npt	1/4 npt
Fluid inlet size	3/4 in npt(f)	2 in npt(f)
Instruction manual	308703	308703

Husky 1050e Pumps
Electric Double Diaphragm

Selector Tool

To order a Husky 1050e, use the online selector tool at

www.graco.com/pumpselectors

or contact your distributor.

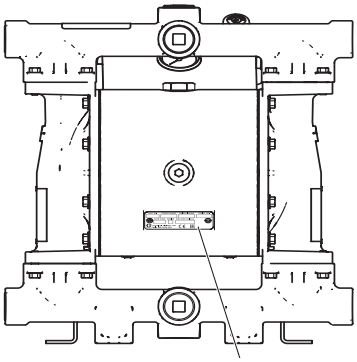

NOTE: Check the identification plate (ID) for the Configuration Number of your pump. Use the following matrix to define the components of your pump.

Example of Product Selector Tool on www.graco.com/pumpselectors.

Pump Configuration Options

Pump	Wetted Section Material		Drive Type		Center Section Material		Motor and Gearbox	
1050	**A**	Aluminum	**E**	Electric	**A**	Aluminum	**04A**	Standard AC Induction Motor with Gearbox
	P	Polypropylene			**S**	Stainless Steel	**04B**	Brushless DC Motor
	S	Stainless Steel					**04C**	AC Induction Motor, ATEX ♦
							04D	Explosionproof AC Induction Motor ★
							04E	NEMA Gearbox ✚
							04F	IEC Gearbox ✚
							05A	Standard AC Induction Motor with Compressor (120V)
							05B	Brushless DC Motor with Compressor (120V)
							06A	Standard AC Induction Motor with Compressor (240V)
							06B	Brushless DC Motor with Compressor (240V)

Fluid Covers and Manifolds		Seat Material		Ball Materials		Diaphragm Material		Manifold O-Rings	
A1	Aluminum, NPT	**AC**	Acetal	**AC**	Acetal	**BN**	Buna-N	**--**	Models with
A2	Aluminum, BSPT	**AL**	Aluminum	**BN**	Buna-N	**CO**	Polychloroprene Overmold		BN, FK, or TP
P1	Polypropylene, center flange	**BN**	Buna-N	**CR**	Polychloroprene Standard	**FK**	FKM Fluoroelastomer		seats do not use
P2	Polypropylene, end flange	**FK**	FKM Fluoroelastomer	**CW**	Polychloroprene Weighted	**GE**	Geolast		o-rings
S1	Stainless steel, NPT	**GE**	Geolast	**FK**	FKM Fluoroelastomer	**PO**	PTFE/EPDM Overmold	**PT**	PTFE
S2	Stainless steel, BSPT	**PP**	Polypropylene	**GE**	Geolast	**PT**	PTFE/EPDM 2–Piece		
		SP	Santoprene	**PT**	PTFE	**PS**	PTFE/Santoprene 2–Piece		
		SS	316 Stainless Steel	**SP**	Santoprene	**SP**	Santoprene		
		TP	TPE	**SS**	316 Stainless Steel	**TP**	TPE		
				TP	TPE				

Approvals:

♦ Aluminum and stainless steel pumps with code 04C are certified:

Ex II 2 G ck Ex d IIB T3 Gb

★ Motors coded 04D are certified:

UL LISTED CSA

Class1, Zone 1, AEx d IIB T3 0°C<Ta<40°C

✚ Aluminum and stainless steel pumps with code 04E or 04F are certified:

Ex II 2 G ck IIB T3 Gb

All Models (except 04D, 05A, and 05B) are certified:

CE

Popular Models

Husky 1050e Popular Models

Part Number	Center Section	Fluid Section	Porting	Seat	Ball	Diaphragm	Motor*	Compressor**
648150	Aluminum	Aluminum	NPT	Hytrel	Acetal	Hytrel	Standard 2 HP AC	Yes (120V)
648225	Aluminium	Aluminium	BSPT	Hytrel	Acetal	Hytrel	Standard 2 HP AC	Yes (240V)
648153	Aluminum	Aluminum	NPT	Santoprene	Santoprene	Santoprene	Standard 2 HP AC	Yes (120V)
648228	Aluminium	Aluminium	BSPT	Santoprene	Santoprene	Santoprene	Standard 2 HP AC	Yes (240V)
648190	Aluminum	Aluminum	NPT	Stainless Steel	Weighted Neoprene	Neoprene Overmolded	Brushless DC	Yes (120V)
648265	Aluminium	Aluminium	BSPT	Stainless Steel	Weighted Neoprene	Neoprene Overmolded	Brushless DC*	Yes (240V)
648182	Aluminum	Aluminum	NPT	Stainless Steel	PTFE	2-Piece PTFE w/ Santoprene Backer	Brushless DC	Yes (120V)
648227	Aluminium	Aluminium	BSPT	Stainless Steel	PTFE	2-Piece PTFE w/ Santoprene Backer	Standard 2 HP AC	Yes (240V)
648187	Aluminum	Aluminum	NPT	Buna-N	Buna-N	Buna-N	Brushless DC	Yes (120V)
648262	Aluminium	Aluminium	NPT	Buna-N	Buna-N	Buna-N	Brushless DC	Yes (240V)
650079	Aluminum	Polypropylene	Center Flange	Santoprene	Santoprene	Santoprene	Standard 2 HP AC	Yes (120V)
650123	Aluminium	Polypropylene	Center Flange	Santoprene	Santoprene	Santoprene	Standard 2 HP AC	Yes (240V)
650099	Aluminum	Polypropylene	Center Flange	Polypropylene	PTFE	2-Piece PTFE w/ Santoprene Backer	Brushless DC	Yes (120V)
650121	Aluminium	Polypropylene	Center Flange	Polypropylene	PTFE	2-Piece PTFE w/ Santoprene Backer	Standard 2 HP AC	Yes (240V)
650102	Aluminum	Polypropylene	Center Flange	Polypropylene	PTFE	PTFE Overmolded	Brushless DC	Yes (120V)
650146	Aluminium	Polypropylene	Center Flange	Polypropylene	PTFE	PTFE Overmolded	Brushless DC	Yes (240V)
650264	Stainless Steel	Polypropylene	Center Flange	Polypropylene	PTFE	2-Piece PTFE w/ Santoprene Backer	Brushless DC	Yes (120V)
650308	Stainless Steel	Polypropylene	Center Flange	Polypropylene	PTFE	2-Piece PTFE w/ Santoprene Backer	Brushless DC	Yes (240V)
651890	Aluminum	Stainless Steel	NPT	Stainless Steel	PTFE	2-Piece PTFE w/ Santoprene Backer	Standard 2 HP AC	Yes (120V)
651935	Aluminium	Stainless Steel	BSPT	Stainless Steel	PTFE	2-Piece PTFE w/ Santoprene Backer	Standard 2 HP AC	Yes (240V)
653054	Stainless Steel	Stainless Steel	NPT	Stainless Steel	PTFE	PTFE Overmolded	Standard 2 HP AC	Yes (120V)
653090	Stainless Steel	Stainless Steel	NPT	Stainless Steel	PTFE	PTFE Overmolded	Standard 2 HP AC	Yes (240V)
651908	Aluminum	Stainless Steel	NPT	Stainless Steel	PTFE	2-Piece PTFE w/ Santoprene Backer	Brushless DC	Yes (120V)
651953	Aluminium	Stainless Steel	BSPT	Stainless Steel	PTFE	2-Piece PTFE w/ Santoprene Backer	Brushless DC	Yes (240V)

**Brushless DC includes Graco Controller* ***Options available without compressor*

Husky 1050e Hazardous Location Pumps

Part Number	Center Section	Fluid Section	Porting	Seat	Ball	Diaphragm	Motor	Compressor
648093	Aluminum	Aluminum	NPT	Santoprene	Santoprene	Santoprene	2 HP North American Class 1, Div 1	No
648062	Aluminum	Aluminum	NPT	Stainless Steel	PTFE	2-Piece PTFE w/ Santoprene Backer	2 HP ATEX Motor	No
648077	Aluminium	Aluminium	BSPT	Stainless Steel	PTFE	2-Piece PTFE w/ Santoprene Backer	2 HP ATEX Motor	No
651854	Aluminum	Stainless Steel	NPT	Stainless Steel	PTFE	2-Piece PTFE w/ Santoprene Backer	2 HP North American Class 1, Div 1	No
651836	Aluminum	Stainless Steel	NPT	Stainless Steel	PTFE	2-Piece PTFE w/ Santoprene Backer	2 HP ATEX Motor	No
651845	Aluminium	Stainless Steel	BSPT	Stainless Steel	PTFE	2-Piece PTFE w/ Santoprene Backer	2 HP ATEX Motor	No

Husky 1050e Cart Mounted Systems

Part Number	Center Section	Fluid Section	Porting	Seat	Ball	Diaphragm	Motor*	Compressor
24Y388	Aluminum	Aluminum	NPT	Stainless Steel	Weighted Neoprene	Neoprene Overmolded	Brushless DC	Yes (120V)
24Y553	Aluminum	Aluminum	NPT	Santoprene	Santoprene	Santoprene	Brushless DC	Yes (120V)
24Y554	Aluminium	Aluminium	NPT	Santoprene	Santoprene	Santoprene	Brushless DC	Yes (240V)
24Y555	Aluminum	Aluminum	NPT	Hytrel	Acetal	Hytrel	Brushless DC	Yes (120V)
24Y556	Aluminium	Aluminium	NPT	Hytrel	Acetal	Hytrel	Brushless DC	Yes (240V)
24Y557	Aluminum	Aluminum	NPT	Buna-N	Buna-N	Buna-N	Brushless DC	Yes (120V)
24Y558	Aluminium	Aluminium	NPT	Buna-N	Buna-N	Buna-N	Brushless DC	Yes (240V)
24Y559	Aluminum	Polypropylene	End Flange	Polypropylene	PTFE	2-Piece PTFE w/ Santoprene Backer	Brushless DC	Yes (120V)
24Y560	Aluminium	Polypropylene	End Flange	Polypropylene	PTFE	2-Piece PTFE w/ Santoprene Backer	Brushless DC	Yes (240V)
24Y561	Aluminum	Stainless Steel	NPT	Stainless Steel	PTFE	2-Piece PTFE w/ Santoprene Backer	Brushless DC	Yes (120V)
24Y562	Aluminium	Stainless Steel	NPT	Stainless Steel	PTFE	2-Piece PTFE w/ Santoprene Backer	Brushless DC	Yes (240V)

**Brushless DC includes Graco motor control and compressor*

Husky 1050e Pumps

Accessories

Part Number	Center Section
24Y661	Leak sensor kit for Husky 1050e pumps
16K911	VFD (Variable Frequency Drive), 2 Horsepower 208-240 VAC Single or Three Phase Input Power
16K912	VFD (Variable Frequency Drive), 2 Horsepower 400-480 VAC Three Phase Input Power
24Y541	1050e Compressor Box Kit (240V)
24Y542	1050e Compressor Box Kit (120V)
24Y543	Cart kit for Husky 1050e
17F734	2 Horsepower Explosion Proof Class 1 Division 1 Motor
17F745	2 Horsepower ATEX Hazardous Location Motor
17J334	Bearing Puller Tool
24Y627	Bushing Installation Tool
239005	Flange Kit - Polypropylene 1" ANSI x 1" npt(f)
239008	Flange Kit - Stainless Steel 1" ANSI x 1" npt(f)
239009	Flange Kit - PVDF 1" ANSI x 1" npt(f)
24B626	Overmolded PTFE Upgrade Kit
24D205	Dual Inlet Manifold for Aluminum Husky 1050e

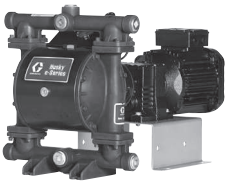

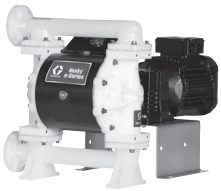

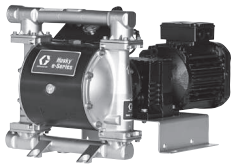

Technical Specifications

Husky 1050e	
Maximum fluid working pressure	70 psi (4.8 bar, 0.48 Mpa)
Air pressure operating range	20 to 80 psi (1.4 to 5.5 bar, 0.14 to 0.55 MPa)
Air inlet size	3/8 in npt(f)
Maximum suction lift*	Wet: 29 ft (8.8 m); Dry: 16 ft (4.9 m)
Maximum size pumpable solids	1/8 in (3.2 mm)
Ambient air temperature range for operation and storage**	32°F to 104°F (0°C to 40°C)
Fluid displacement per cycle	0.17 gallons (0.64 L)
Maximum free-flow delivery	42 gpm (158 lpm)
Maximum pump speed	280 cpm
Fluid Inlet and outlet Size Aluminum and stainless steel Polypropylene	 1 in npt(f) or 1 in bspt 1 in ANSI/DIN Raised Face Flange
AC motor power	2 HP
BLDC motor power	2.2 HP
Operation manual	344188

Performance Charts

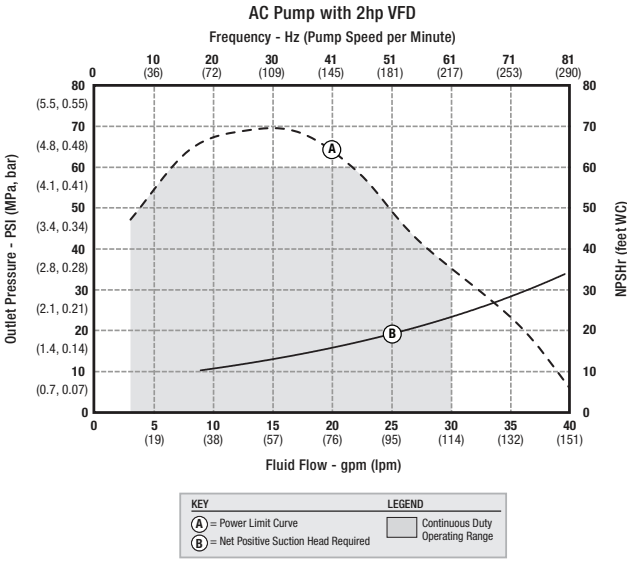

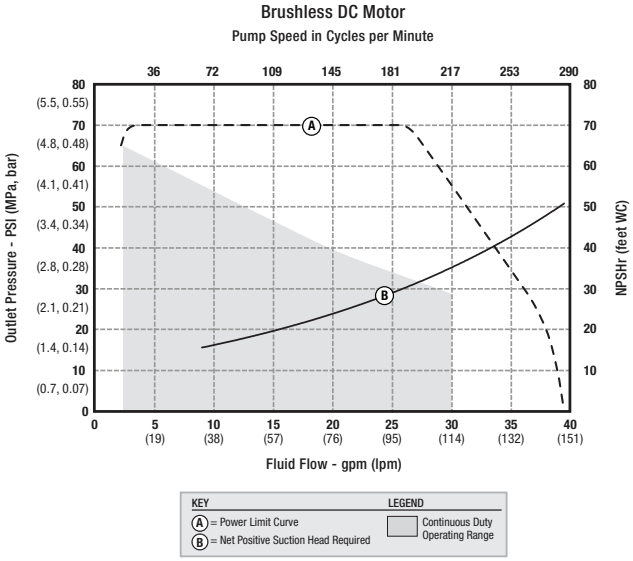

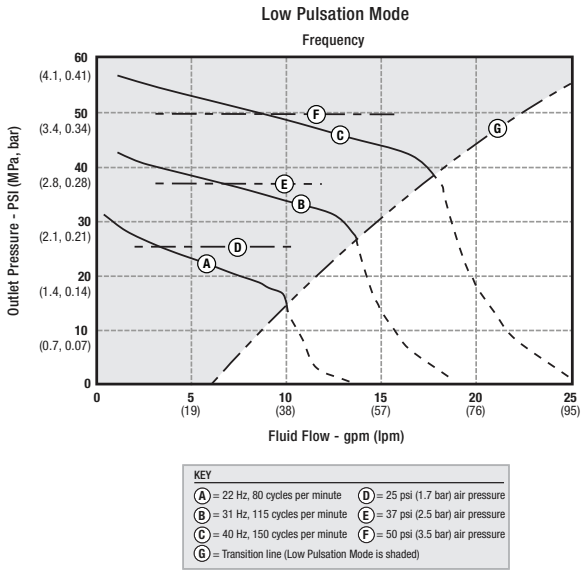

Husky 1050e Pumps

Dimensions

Husky 1050e Aluminum

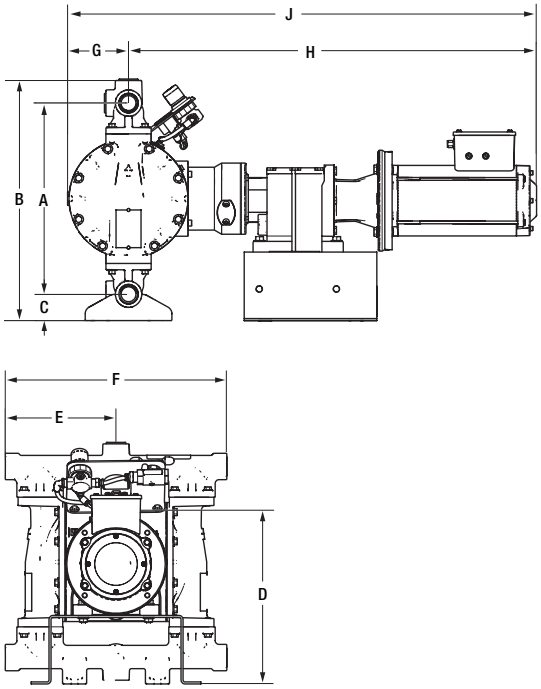

Ref.	Gearbox Only (04E and 04F) in	Gearbox Only (04E and 04F) cm	Gearbox and Motor: AC (04A, 04C and 04D) in	Gearbox and Motor: AC (04A, 04C and 04D) cm	Gearbox and Motor: BLDC (04B) in	Gearbox and Motor: BLDC (04B) cm	Gearbox, Motor and Compressor: AC (05A and 06A) in	Gearbox, Motor and Compressor: AC (05A and 06A) cm	Gearbox, Motor and Compressor: BLDC (05B and 06B) in	Gearbox, Motor and Compressor: BLDC (05B and 06B) cm
A	12.7	32.2	12.7	32.2	12.7	32.2	12.7	32.2	12.7	32.2
B	15.9	40.5	15.9	40.5	15.9	40.5	15.9	40.5	15.9	40.5
C	1.8	4.5	1.8	4.5	1.8	4.5	1.8	4.5	1.8	4.5
D	NA		04A 12.3	04A 31.1	11.4	29.0	13.1	33.4	12.4	31.5
			04C 11.6	04C 29.4	NA					
			04D 12.4	04D 31.5						
E	7.3	18.6	7.3	18.6	7.3	18.6	7.3	18.6	7.3	18.6
F	14.7	37.3	14.7	37.3	14.7	37.3	14.7	37.3	14.7	37.3
G	3.9	10.0	3.9	10.0	3.9	10.0	3.9	10.0	3.9	10.0
H	04E 17.0	04E 43.2	04A 24.8	04A 63.0	27.1	68.8	24.8	63.0	27.1	68.8
	04F 17.0	04F 43.2	04C 30.4	04C 77.1	NA					
	–	–	04D 29.9	04D 75.9						
J	04E 21.0	04E 53.5	04A 28.8	04A 73.2	31.1	79.0	28.8	73.2	31.1	79.0
	04F 21.0	04F 53.5	04C 34.4	04C 87.4	NA					
	–	–	04D 33.9	04D 86.1						

Husky 1050e Stainless Steel

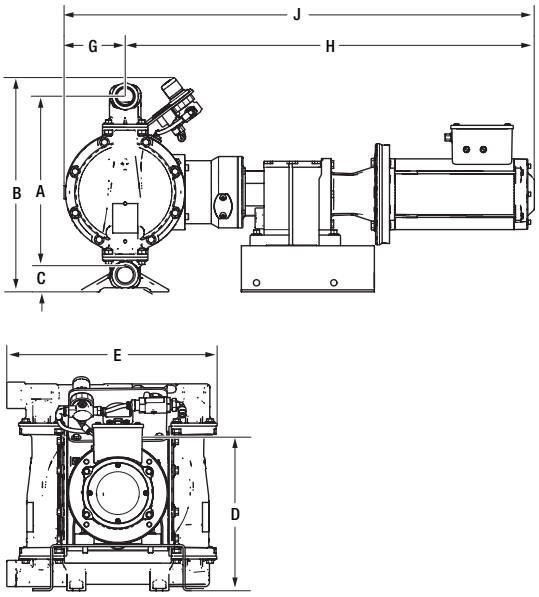

Ref.	Gearbox Only (04E and 04F) in	Gearbox Only (04E and 04F) cm	Gearbox and Motor: AC (04A, 04C and 04D) in	Gearbox and Motor: AC (04A, 04C and 04D) cm	Gearbox and Motor: BLDC (04B) in	Gearbox and Motor: BLDC (04B) cm	Gearbox, Motor and Compressor: AC (05A and 06A) in	Gearbox, Motor and Compressor: AC (05A and 06A) cm	Gearbox, Motor and Compressor: BLDC (05B and 06B) in	Gearbox, Motor and Compressor: BLDC (05B and 06B) cm
A	11.8	30.0	11.8	30.0	11.8	30.0	11.8	30.0	11.8	30.0
B	13.7	34.8	13.7	34.8	13.7	34.8	13.7	34.8	13.7	34.8
C	1.1	2.8	1.1	2.8	1.1	2.8	1.1	2.8	1.1	2.8
D	NA		04A 9.9	04A 25.0	9.9	25.2	10.6	27.0	9.9	25.2
			04C 11.6	04C 29.4	NA					
			04D 12.4	04D 31.5						
E	13.6	34.5	13.6	34.5	13.6	34.5	13.6	34.5	13.6	34.5
G	3.9	10.0	3.9	10.0	3.9	10.0	3.9	10.0	3.9	10.0
H	04E 17.0	04E 43.2	04A 24.8	04A 63.0	27.1	68.8	24.8	63.0	27.1	68.8
	04F 17.0	04F 43.2	04C 30.4	04C 77.1	NA					
	–	–	04D 29.9	04D 75.9						
J	04E 21.0	04E 53.5	04A 28.8	04A 73.2	31.1	79.0	28.8	73.2	31.1	79.0
	04F 21.0	04F 53.5	04C 34.4	04C 87.4	NA					
	–	–	04D 33.9	04D 86.1						

Refer to manual 334188 for additional dimensions

Dimensions

Husky 1050e Polypropylene

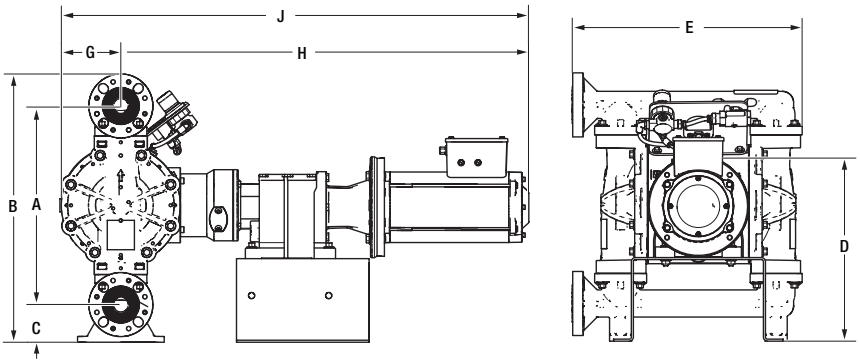

Ref.	Gearbox Only (04E and 04F)		Gearbox and Motor				Gearbox, Motor and Compressor			
			AC (04A, 04C and 04D)		BLDC (04B)		AC (05A and 06A)		BLDC (05B and 06B)	
	in	cm	in	cm	in	cm	in	cm	in	cm
A	12.1	30.8	12.1	30.8	12.1	30.8	12.1	30.8	12.1	30.8
B	17.8	45.2	17.8	45.2	17.8	45.2	17.8	45.2	17.8	45.2
C	1.9	4.9	1.9	4.9	1.9	4.9	1.9	4.9	1.9	4.9
D	NA		04A 13.3	04A 33.7	12.4	31.6	13.3	33.7	12.4	31.6
			04C 14.1	04C 35.7	NA					
			04D 12.4	04D 31.5						
E Center Flange	16.7	42.4	16.7	42.4	16.7	42.4	16.7	42.4	16.7	42.4
E End Flange	15.1	38.4	15.1	38.4	15.1	38.4	15.1	38.4	15.1	38.4
G	3.9	10.0	3.9	10.0	3.9	10.0	3.9	10.0	3.9	10.0
H	04E 17.0	04E 43.2	04A 24.8	04A 63.0	27.1	68.8	24.8	63.0	27.1	68.8
	04F 17.0	04F 43.2	04C 30.4	04C 77.1	NA					
	–	–	04D 29.9	04D 75.9						
J	04E 21.0	04E 53.5	04A 28.8	04A 73.2	31.1	79.0	28.8	73.2	31.1	79.0
	04F 21.0	04F 53.5	04C 34.4	04C 87.4	NA					
	–	–	04D 33.9	04D 86.1						

Refer to manual 334188 for additional dimensions

SoloTech Hose Pumps
Positive Displacement Hose Pumps

Selector Tool

To order a SoloTech pump, use the online selector tool at **www.graco.com/solotechselector** or contact your distributor.

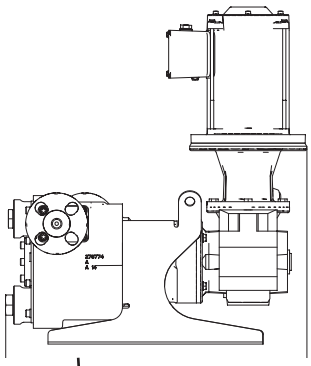

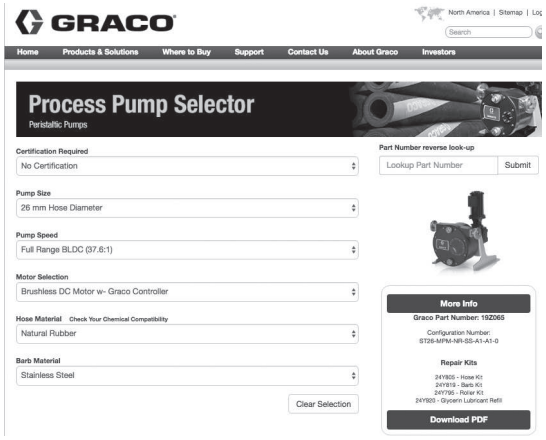

Pump Configuration Options

Check the identification plate (ID) for the Configuration Number of your pump. Use the following matrix to define the components of your pump.

Pump	Hose Size			Hose Material/Color	
ST	**10**	10 mm	AC motor with low-speed gear reducer	**NR**	Natural Rubber/Black
	23	23 mm	AC motor with medium-speed gear reducer	**CS**	Chlorosulfonated Polyethylene (CSM)/Orange
	26	26 mm	AC motor with high speed gear reducer	**EP**	Ethylene propylene diene monomar (EPDM)/Blue
	30	30 mm	Brushless DC (BLDC) motor with gear reducer	**BN**	Nitrile (NBR/Yellow)

Barb Materials		Roller		Housing		Options	
SS	Stainless Steel	**A1**	Aluminum	**A1**	Aluminum	**0**	None
PV	PVDF						
HS	Hastelloy						

Popular Models

Graco Pumps with BLDC Motors (Includes Graco Controller)
Choose Your Hose & Hose Barb Materials

Hose Material	Hose Barb Material	SoloTech 10	SoloTech 23	SoloTech 26	SoloTech 30
Natural Rubber	316 SST	19Z001	19Z033	19Z065	19Z097
	PVDF	19Z196	19Z200	19Z204	19Z208
CSM	316 SST	19Z002	19Z034	19Z066	19Z098
	PVDF	19Z003	19Z035	19Z067	19Z101
	Hastelloy-C	19Z004	19Z039	19Z071	19Z103
Nitrile	316 SST	19Z005	19Z038	19Z070	19Z100
EPDM	316 SST	19Z006	19Z036	19Z068	19Z099
	PVDF	19Z007	19Z037	19Z069	19Z102
	Hastelloy-C	19Z008	19Z040	19Z072	19Z104

Graco Pumps with AC Motors

Choose Your Hose & Hose Barb Materials

Hose Material	Hose Barb Material	SoloTech 10			SoloTech 23			SoloTech 26			SoloTech 30		
		Low	Mid	High	Low	Mid	High	Low	Mid	High	Low	Mid	High
Natural Rubber	316 SST	19Z009	19Z017	19Z025	19Z041	19Z049	19Z057	19Z081	19Z089	19Z073	19Z121	19Z105	19Z113
	PVDF	19Z195	19Z194	19Z193	19Z199	19Z198	19Z197	19Z203	19Z202	19Z201	19Z207	19Z206	19Z205
CSM	316 SST	19Z010	19Z018	19Z026	19Z042	19Z050	19Z058	19Z082	19Z090	19Z074	19Z122	19Z106	19Z114
	PVDF	19Z011	19Z019	19Z027	19Z045	19Z053	19Z061	19Z085	19Z093	19Z077	19Z125	19Z109	19Z117
	Hastelloy-C	19Z012	19Z021	19Z029	19Z046	19Z055	19Z063	19Z087	19Z095	19Z078	19Z127	19Z111	19Z119
Nitrile	316 SST	19Z013	19Z020	19Z028	19Z044	19Z052	19Z060	19Z084	19Z092	19Z076	19Z124	19Z108	19Z116
EPDM	316 SST	19Z014	19Z022	19Z030	19Z043	19Z051	19Z059	19Z083	19Z091	19Z075	19Z123	19Z107	19Z115
	PVDF	19Z015	19Z023	19Z031	19Z047	19Z054	19Z062	19Z086	19Z094	19Z079	19Z126	19Z110	19Z118
	Hastelloy-C	19Z016	19Z024	19Z032	19Z048	19Z056	19Z064	19Z088	19Z096	19Z080	19Z128	19Z112	19Z120

Hose Pumps with No Motor Drive and NEMA Connection

Choose Your Hose & Hose Barb Materials

Hose Material	Hose Barb Material	SoloTech 10			SoloTech 23			SoloTech 26			SoloTech 30		
		Low	Mid	High	Low	Mid	High	Low	Mid	High	Low	Mid	High
Natural Rubber	316 SST	19X009	19X041	19X025	19X057	19X089	19X073	19X105	19X137	NA	19X153	19X185	19X169
CSM	316 SST	19X010	19X042	19X026	19X058	19X090	19X074	19X106	19X138	NA	19X154	19X186	19X170
	PVDF	19X011	19X043	19X027	19X059	19X091	19X075	19X107	19X139	NA	19X156	19X188	19X172
	Hastelloy-C	19X012	19X044	19X028	19X060	19X092	19X076	19X108	19X140	NA	19X158	19X190	19X174
Nitrile	316 SST	19X016	19X048	19X032	19X064	19X096	19X080	19X112	19X144	NA	19X160	19X192	19X176
EPDM	316 SST	19X013	19X045	19X029	19X061	19X093	19X077	19X109	19X141	NA	19X155	19X187	19X171
	PVDF	19X014	19X046	19X030	19X062	19X094	19X078	19X110	19X142	NA	19X157	19X189	19X173
	Hastelloy-C	19X015	19X047	19X031	19X063	19X095	19X079	19X111	19X143	NA	19X159	19X191	19X175

Hose Pumps with No Motor Drive and IEC Connection

Choose Your Hose & Hose Barb Materials

Hose Material	Hose Barb Material	SoloTech 10			SoloTech 23			SoloTech 26			SoloTech 30		
		Low	Mid	High	Low	Mid	High	Low	Mid	High	Low	Mid	High
Natural Rubber	316 SST	19X001	19X033	19X017	19X049	19X081	19X065	19X097	19X129	19X113	19X145	19X177	16X161
CSM	316 SST	19X002	19X034	19X018	19X050	19X082	19X066	19X098	19X130	19X114	19X146	19X178	19X162
	PVDF	19X003	19X035	19X019	19X051	19X085	19X067	19X099	19X133	19X115	19X149	19X181	16X165
	Hastelloy-C	19X004	19X036	19X020	19X055	19X086	19X071	19X103	19X134	19X119	19X151	19X183	16X167
Nitrile	316 SST	19X005	19X037	19X021	19X054	19X084	19X070	19X102	19X132	19X118	19X148	19X180	16X164
EPDM	316 SST	19X006	19X038	19X022	19X052	19X083	19X068	19X100	19X141	19X116	19X147	19X179	16X163
	PVDF	19X007	19X039	19X023	19X053	19X087	19X069	19X101	19X135	19X117	19X150	19X182	16X166
	Hastelloy-C	19X008	19X040	19X024	19X056	19X088	19X072	19X104	19X136	19X120	19X152	19X184	19X168

SoloTech Hose Pumps

Hose Pumps with No Motor Drive or Gearbox

Choose Your Hose & Hose Barb Materials

Hose Material	Hose Barb Material	SoloTech 10	SoloTech 23	SoloTech 26	SoloTech 30
Natural Rubber	316 SST	19Y008	19Y017	19Y026	19Y035
	PVDF	19Y007	19Y016	19Y025	19Y034
CSM	316 SST	19Y003	19Y012	19Y021	19Y030
	PVDF	19Y002	19Y011	19Y020	19Y029
	Hastelloy-C	19Y001	19Y010	19Y019	19Y028
Nitrile	316 SST	19Y000	19Y009	19Y018	19Y027
EPDM	316 SST	19Y006	19Y015	19Y024	19Y033
	PVDF	19Y005	19Y014	19Y023	19Y032
	Hastelloy-C	19Y004	19Y013	19Y022	19Y031

Accessories

Replacement Hose Kits

Includes 2 Clamps

Hose Barb Material	SoloTech 10	SoloTech 23	SoloTech 26	SoloTech 30
Natural Rubber	24Y797	24Y801	24Y805	24Y809
CSM	24Y798	24Y802	24Y806	24Y810
EPDM	24Y799	24Y803	24Y807	24Y811
Nitrile	24Y800	24Y804	24Y808	24Y812

VFDs (Variable Frequency Drives)

Hp	Input Voltage	Output Voltage	Part Number
0.5	120 or 240 VAC (1 Phase)	240 VAC (3 Phase)	16K905
0.5	208-240 VAC (1 or 3 Phase)	208-240 VAC (3 Phase)	16K906
1	120 or 240 VAC (1 Phase)	240 VAC (3 Phase)	16K907
1	208-240 VAC (1 or 3 Phase)	208-240 VAC (3 Phase)	16K908
1.5	120 or 240 VAC (1 Phase)	240 VAC (3 Phase)	16K909
1.5	208-240 VAC (1 or 3 Phase)	208-240 VAC (3 Phase)	16K910
2	208-240 VAC (1 or 3 Phase)	208-240 VAC (3 Phase)	16K911
2	400-480 VAC (3 Phase)	400-480 VAC (3 Phase)	16K912
3	208-240 VAC (1 or 3 Phase)	208-240 VAC (3 Phase)	17K696
3	400-480 VAC (3 Phase)	400-480 VAC (3 Phase)	17K697

Leak Detector Kits

Description	Part Number
SoloTech Leak Detector Kit	24Y849
Leak Sensor Connection Cable for AC Pumps (9.8ft / 3meter)	17H389
Leak Sensor Connection Cable for AC Pumps (24.6ft / 7.5meter)	17H390
Leak Sensor Connection Cable for AC Pumps (52.5ft / 16meter)	17H391
Leak Sensor Connection Cable for BLDC Pumps (9.8ft / 3meter)	121683
Leak Sensor Connection Cable for BLDC Pumps (24.6ft / 7.5meter)	17H349
Leak Sensor Connection Cable for BLDC Pumps (52.5ft / 16meter)	17H352

Hose Pump Lubricant

Description	Part Number
Glycerin Based Hose Lube (1 quart)	24K692
Glycerin Based Hose Lube (1/2 gallon)	24Y920
Glycerin Based Hose Lube (1 gallon)	24K694
Glycerin Based Hose Lube (55 gallon drum)	24M435
Silicone Based Hose Lube (1 gallon)	24K686
Silicone Based Hose Lube (55 gallon drum)	24M434

Technical Specifications

	Model	SoloTech 10			SoloTech 23			SoloTech 26			SoloTech 30		
	Hose Size	10 mm			23 mm			26 mm			30 mm		
	Max flow - gpm (lpm)	.685 (2.60)			4.75 (17.98)			10.18 (38.54)			16.0 (60.57)		
	Flow - gallon/rev (liter/rev)	0.007 (0.0265)			0.050 (0.190)			0.109 (.412)			0.175 (0.662)		
	Pump Speed Range	Low	Mid	High	Low	Mid	High	Low	Mid	High	Low	Mid	High
AC Motor Pumps	Gearbox Ratio	157:1	48:1	19.5:1	157:1	48:1	19.13:1	145:1	47:1	19.27:1	150:1	48:1	19.7:1
AC Motor Pumps	Horsepower	0.25	0.50	0.75	0.25	0.75	1.00	0.33	1.00	2.00	0.50	1.50	3.00
AC Motor Pumps	Pump Speed @ 60 Hz - rpm	11	37	92	11	37	94	12	38	93	12	37	91
AC Motor Pumps	Flow Rate @ 60 Hz - gpm (lpm)	0.085 (0.32)	0.27 (1.02)	.685 (2.60)	0.57 (2.16)	1.89 (7.15)	4.75 (17.98)	1.35 (5.11)	4.18 (15.82)	10.18 (38.54)	2.1 (7.95)	6.55 (24.80)	16.0 (60.57)
AC Motor Pumps	Minimum Flow Rate - gpm (lpm)	0.01 (.038)	0.05 (.189)	0.1 (.379)	0.1 (.379)	0.3 (1.14)	0.8 (3.03)	0.2 (.757)	0.7 (2.65)	1.7 (6.44)	0.4 (1.51)	1.1 (4.16)	2.7 (10.22)
BLDC Motor Pumps	Gearbox Ratio	37.66:1			37.66:1			38.23:1			36.61:1		
BLDC Motor Pumps	Max. Pump Speed Range (RPM)	2 - 94			2 - 94			2 - 94			2 - 94		
BLDC Motor Pumps	Horsepower	1.0			1.0			2.2			2.2		
BLDC Motor Pumps	Flow Rate Range - gpm (lpm)	.01 - .685 (.04 - 2.60)			.12 - 4.75 (.45 - 17.98)			.26 - 10.18 (.98 - 38.54)			.43- 16.0 (1.62 - 60.57)		
	Maximum Working Pressure	125 psi (8.6 bar)			125 psi (8.6 bar)			125 psi (8.6 bar)			125 psi (8.6 bar)		
	Maximum Suction Lift - ft (m)	29 (8.9)			29 (8.9)			29 (8.9)			29 (8.9)		
	Pump Inlet / Outlet Size	DIN PN16 010 - 3/8 in, ANSI 150 1/2 NPS, JIS 10K 10			DIN PN16 025 - 1 in, ANSI 150 1-1/4 NPS, JIS 10K 025			DIN PN16 025 - 1 in, ANSI 150 1-1/4 NPS, JIS 10K 025			DIN PN16 025 - 1-1/4 in, ANSI 150 1-1/2 NPS, JIS 10K 032		
	Operation Manual	3A3096			3A3096			3A3096			3A3096		
	Repair Parts Manual	3A3162			3A3162			3A3162			3A3162		

SoloTech Hose Pumps

Performance Charts

NOTE: As back pressure increases, flow rate may decrease, especially for low-viscosity fluids at low cycle rates.
Data were obtained using water as a medium with no back pressure.

A	LAC Motor (low speed)
B	MAC Motor (medium speed)
C	HAC Motor (high speed)
D	MPM Brushless DC motor
Shading indicates the recommended continuous duty range.	

SoloTech 10

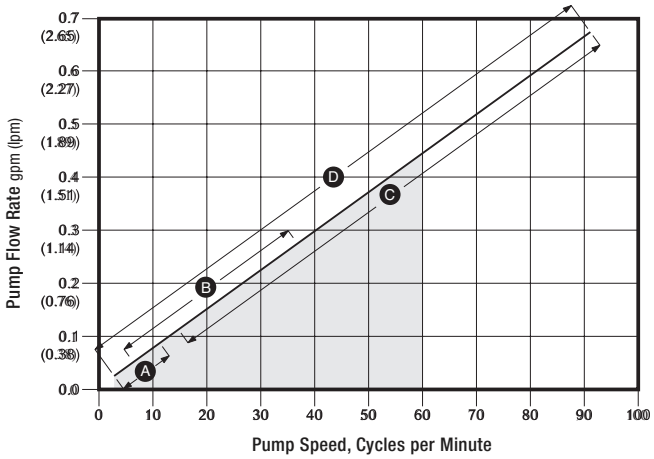

SoloTech 26

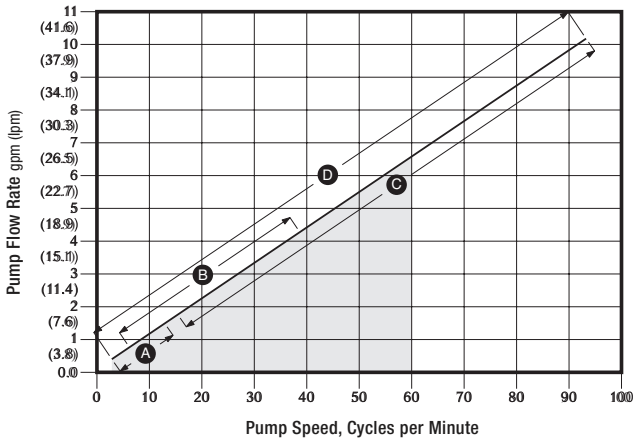

SoloTech 23

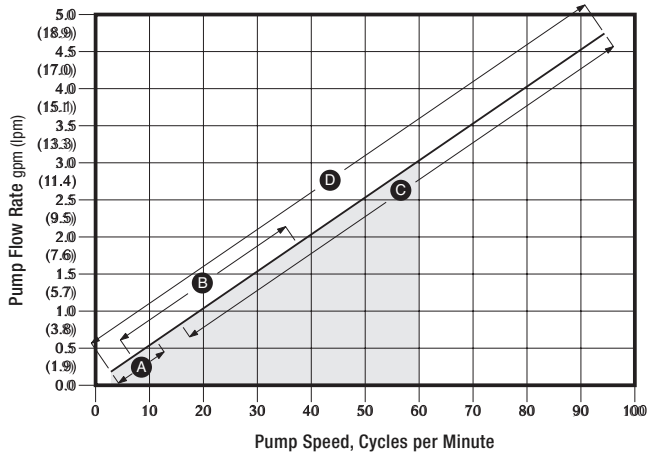

SoloTech 30

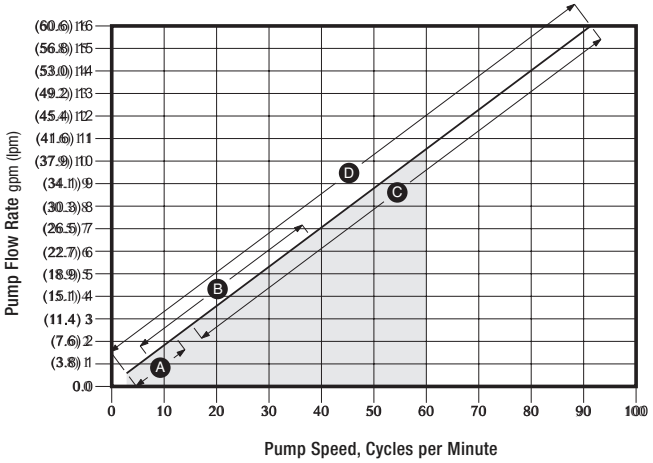

Dimensions

SoloTech 10 and SoloTech 23 AC Pumps

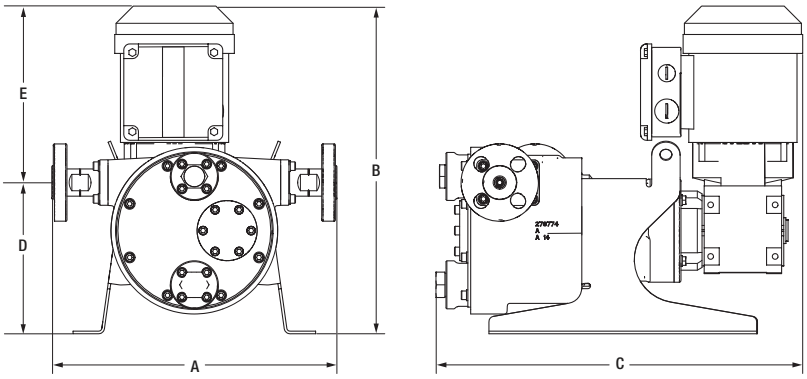

Ref.	A		B		C		D		E	
	in	cm	in	cm	in	cm	in	cm	in	cm
ST10 HAC	13.0	33.0	16.7	42.4	16.6	42.2	7.0	17.8	8.9	22.6
ST10 MAC	13.0	33.0	15.4	39.1	16.6	42.2	7.0	17.8	8.9	22.6
ST10 LAC	13.0	33.0	15.9	40.4	16.3	41.4	7.0	17.8	9.4	23.9
ST23 HAC	17.2	43.7	21.0	53.3	19.9	50.5	10.1	25.7	10.9	27.7
ST23 MAC	17.2	43.7	18.0	45.7	21.0	53.3	10.1	25.7	7.9	20.1
ST23 LAC	17.2	43.7	17.5	44.4	20.1	51.1	10.1	25.7	7.4	20.1

SoloTech 26 and SoloTech 30 AC Pumps

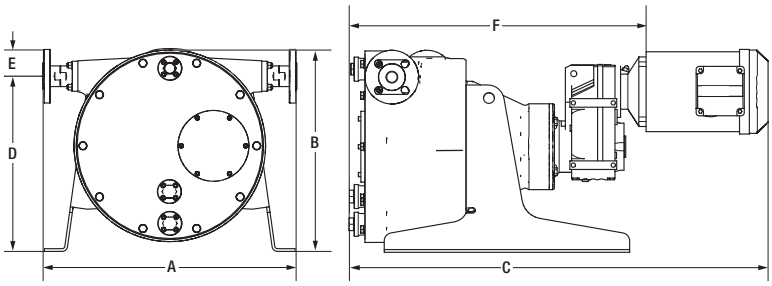

Ref.	A		B		C		D		E	
	in	cm	in	cm	in	cm	in	cm	in	cm
ST26 HAC	21.7	55.1	16.5	41.9	34.0	86.4	14.0	35.6	2.0	5.1
ST26 MAC	21.7	55.1	16.5	41.9	32.9	83.6	14.0	35.6	2.0	5.1
ST26 LAC	21.7	55.1	15.5	39.4	30.3	77.0	14.0	35.6	2.0	5.1
ST30 HAC	23.3	59.2	20.0	50.8	38.4	97.5	16.1	40.9	2.5	6.3
ST30 MAC	23.3	59.2	20.0	50.8	35.3	89.7	16.1	40.9	2.5	6.3
ST30 LAC	23.3	59.2	20.0	50.8	32.6	82.8	16.1	40.9	2.5	6.3

Refer to manual 334859 for additional dimensions

SoloTech Hose Pumps

Dimensions

SoloTech 10, SoloTech 23 and SoloTech 26 BLDC Pumps

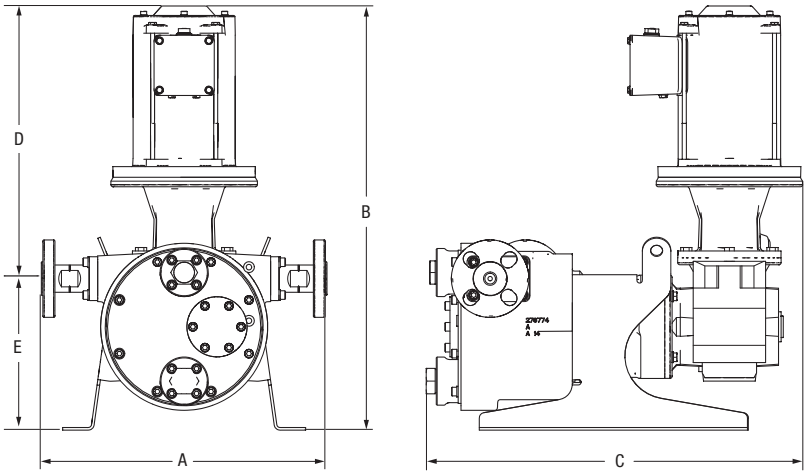

Ref.	A		B		C		D		E	
	in	cm	in	cm	in	cm	in	cm	in	cm
ST10 MPM	13.0	33.0	19.5	49.5	17.5	44.4	7.0	17.8	12.5	31.7
ST23 MPM	17.2	43.7	21.0	53.3	21.0	53.3	10.1	25.7	10.9	27.7
ST26 MPM	21.7	55.1	26.0	66.0	24.3	61.7	14.0	35.6	12.0	30.5

SoloTech 30 BLDC Pumps

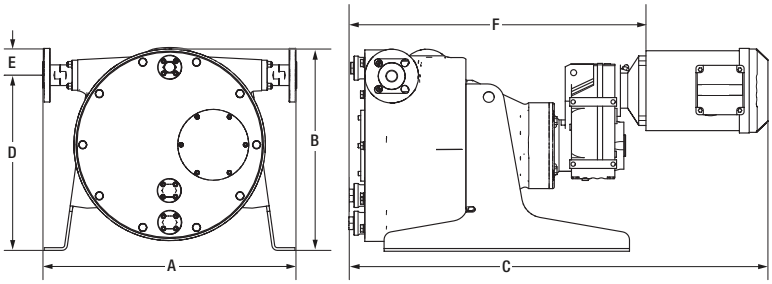

Ref.	A		B		C		D		E	
	in	cm	in	cm	in	cm	in	cm	in	cm
ST26 HAC	21.7	55.1	16.5	41.9	34.0	86.4	14.0	35.6	2.0	5.1
ST26 MAC	21.7	55.1	16.5	41.9	32.9	83.6	14.0	35.6	2.0	5.1
ST26 LAC	21.7	55.1	15.5	39.4	30.3	77.0	14.0	35.6	2.0	5.1
ST30 HAC	23.3	59.2	20.0	50.8	38.4	97.5	16.1	40.9	2.5	6.3
ST30 MAC	23.3	59.2	20.0	50.8	35.3	89.7	16.1	40.9	2.5	6.3
ST30 LAC	23.3	59.2	20.0	50.8	32.6	82.8	16.1	40.9	2.5	6.3

Refer to manual 334859 for additional dimensions

Ordering Information

Pneumatic Hydra-Clean						
Package Order Number	247549 or 247550	247551 or 247552	247553 or 247554	24W473 with Hose Reel	258664 or 258665	206515
Package Instruction Manual	312585	312585	312585	312585	312585	306817
Air Motor Part Number	N34DN0	N65DN0	N65DN0	N65DN0	N65DN0	207352
Air Motor Manual	311238	311238	311238	311238	311238	306982
Pump Lower Part number	247599	241648	687055	687055	24B923	224344
Pump Manual	312745	311825	311825	311825	311827	308117
Wetted Parts	SST/PTFE/ CF-PTFE	SST/CF-PTFE/ UHMWPE	SST/CF-PTFE/ UHMWPE	SST/CF-PTFE/ UHMWPE	SST/CF-PTFE/ UHMWPE	SST/CR/ UHMWPE
Pump Std. Repair Kit	247881	222880	See Maual	See Maual	24C162	224402
Optional PTFE Repair Kit	N/A	222876	222846	222846	237179	224889
Std. Discharge hose (3/8 x 50 ft) 4500 psi with M & F QD's	247878	247878	247878	247878	247878	205753
Std. Gun/Wand Assy	247879	247879	247879	247879	247879	237485/ 207299
Std. 60 Mesh Inlet Strainer	15T284	15T284	15T284	15T284	15T284	206300

Hydraulic Hydra-Clean					
Package Order Number	24V616	24V628	24W474 with Hose Reel	24V617	24V629
Package Instruction Manual	334187	334187	334187	334187	334187
Hydraulic Motor Part Number	24W139	24W139	24W139	24W139	24W139
Hydraulic Motor Manual	307158	307158	307158	307158	307158
Pump Lower Part number	687055	687055	687055	24B923	24B923
Pump Manual	311825	311825	311825	311827	311827
Wetted Parts	SST/PTFE/ CF-PTFE	SST/CF-PTFE/ UHMWPE	SST/CF-PTFE/ UHMWPE	SST/CF-PTFE/ UHMWPE	SST/CF-PTFE/ UHMWPE
Pump Std. Repair Kit	222880	222880	222880	24C162	24C162
Optional PTFE Repair Kit	222876	222876	222876	237179	237179
Std. Gun/Wand Assy	247879	247879	247879	247879	247879
Std. 60 Mesh Inlet Strainer	15T284	15T284	15T284	15T284	15T284

Hydra-Clean Hydraulic Cart-Mount*
(Wall mount unit also available)
**Hose Reel is only included with cart mount package 24W474*

Hydra-Clean Air-Operated Wall-Mount

Hydra-Clean Air-Operated Cart-Mount

Hydra-Clean Air-Operated 10:1 Drum-Mount

Hydra-Clean Pressure Washers

Technical Specifications

Pneumatic Hydra-Clean

Part Number	Pump Package	Max. Working Pressure†	Max. Air Input Pressure	Fluid Flow at 60 cpm	Volume per Cycle	Air Inlet Size	Fluid Inlet Size	Fluid Outlet Size
247549	12:1 Cart Mount	1250 psi (86 bar, 8.6 MPa)	100 psi (7 bar, 0.7 MPa)	8.7 gpm (33.0 lpm)	18.6 oz (550 cc)	3/4" npt(f)	1 in	3/8 in
247550	12:1 Wall Mount	1250 psi (86 bar, 8.6 MPa)	100 psi (7 bar, 0.7 MPa)	8.7 gpm (33.0 lpm)	18.6 oz (550 cc)	3/4" npt(f)	1 in	3/8 in
247551	23:1 Cart Mount	2275 psi (157 bar, 15.7 MPa)	100 psi (7 bar, 0.7 MPa)	9.2 gpm (34.7 lpm)	19.6 oz (580 cc)	3/4" npt(f)	1 in	3/8 in
247552	23:1 Wall Mount	2275 psi (157 bar, 15.7 MPa)	100 psi (7 bar, 0.7 MPa)	9.2 gpm (34.7 lpm)	19.6 oz (580 cc)	3/4" npt(f)	1 in	3/8 in
247553	30:1 Cart Mount	3065 psi (211 bar, 21.1 MPa)	100 psi (7 bar, 0.7 MPa)	6.8 gpm (25.9 lpm)	14.5 oz (430 cc)	3/4" npt(f)	1 in	3/8 in
24W473**	30:1 Cart Mount	3065 psi (211 bar, 21.1 MPa)	100 psi (7 bar, 0.7 MPa)	6.8 gpm (25.9 lpm)	14.5 oz (430 cc)	3/4" npt(f)	1 in	3/8 in
247554	30:1 Wall Mount	3065 psi (211 bar, 21.1 MPa)	100 psi (7 bar, 0.7 MPa)	6.8 gpm (25.9 lpm)	14.5 oz (430 cc)	3/4" npt(f)	1 in	3/8 in
258664	40:1 Cart Mount	4000 psi (276 bar, 27.6 MPa)	100 psi (7 bar, 0.7 MPa)	4.6 gpm (17.4 lpm)	9.8 oz (290 cc)	3/4" npt(f)	1 in	3/8 in
258665	40:1 Wall Mount	4000 psi (276 bar, 27.6 MPa)	100 psi (7 bar, 0.7 MPa)	4.6 gpm (17.4 lpm)	9.8 oz (290 cc)	3/4" npt(f)	1 in	3/8 in
206515	10:1 Drum Mount	1800 psi (125 bar, 12.5 MPa)	180 psi (12.5 bar, 1.2 MPa)	3.0 gpm (11.4 lpm)	6.4 oz (189 cc)	1/2" npt(f)	1/2 in	3/4 in

Hydraulic Hydra-Clean

Part Number	Pump Package	Max. Working Pressure†	Max. Stall Pressure	Max. Hydraulic Inlet Pressure	Hydraulic Flow Required	Fluid Flow at 60 CPM	Hydraulic Inlet Size	Hydraulic Outlet Size	Fluid Inlet Size	Fluid Outlet Size
24V616	3000H Cart	3,000 psi (206.7 bar)	3,500 psi (241 bar)	1,900 psi (131 bar)	12 gpm (45.4 lpm)	6.8 gpm (25.9 lpm)	3/4" JIC	3/4" JIC	1 in	3/8 in
24W474**	3000H Cart	3,000 psi (206.7 bar)	3,500 psi (241 bar)	1,900 psi (131 bar)	12 gpm (45.4 lpm)	6.8 gpm (25.9 lpm)	3/4" JIC	3/4" JIC	1 in	3/8 in
24V628	3000H Wall	3,000 psi (206.7 bar)	3,500 psi (241 bar)	1,900 psi (131 bar)	12 gpm (45.4 lpm)	6.8 gpm (25.9 lpm)	3/4" JIC	3/4" JIC	1 in	3/8 in
24V617	4300H Cart	4,300 psi (296.3 bar)	5,000 psi (344 bar)	1,900 psi (131 bar)	18 gpm (68.1 lpm)	9.2 gpm (34.7 lpm)	3/4" JIC	3/4" JIC	1 in	3/8 in
24V629	4300H Wall	4,300 psi (296.3 bar)	5,000 psi (344 bar)	1,900 psi (131 bar)	18 gpm (68.1 lpm)	9.2 gpm (34.7 lpm)	3/4" JIC	3/4" JIC	1 in	3/8 in

***Hose Reel is included with cart mount package 24W474*
†Maximum fluid pressure when spraying with available Graco spray tips. Smaller tips or stalled conditions result in higher pressure.

Accessories

GUNS AND WANDS

15T282 Optional replacement SST spray gun
15T279 32 in (81 cm) SST wand
15T280 10 in (25 cm) SST wand
247880 Gun SST quick disconnent connections
25A043 Fluoroelastomer (FKM) o-ring kit for gun
For use with aggressive cleaning chemicals

SPRAY TIPS

A **198013** Oscillating Spray Tip
0.149 in (3.8 mm), 5,000 psi (344 bar) maximum pressure

B **198012** Rotating Spray Tip
0.149 in (3.8 mm), 4,500 psi (310.0 bar) maximum pressure

C **198014** Rotating Spray Tip
0.156 in (4.0 mm), 5,000 psi (344 bar) maximum pressure

D **805532** 0.020 Diameter Orfice Spray Tip
0.020 in (0.5 mm), 15º

D **805533** 0.020 Diameter Orfice Spray Tip
0.020 in (0.5 mm), 25º

805538 0.030 Diameter Orfice Spray Tip
0.030 in (0.8 mm), 40º

805549 0.045 Diameter Orfice Spray Tip
0.045 in (1.1 mm), 25º

805566 0.065 Diameter Orfice Spray Tip
0.065 in (1.7 mm), 40º

805575 0.080 Diameter Orfice Spray Tip
0.080 in (2.0 mm), 0º

103921 0.065 Diameter Orfice Spray Tip
0.065 in (1.6 mm), 40º

OTHER

191635 10 mesh inlet strainer with 1 in npt(f) connection

15T272 Quick Coupling
For adding a second hose with gun to the outlet of the pump

E **24W471** Hose Reel Kit
5,000 psi (344 bar) maximum pressure

F **17C690** Foaming Attachment
5,000 psi (344 bar) maximum pressure

G **17A074** Pulsation Dampener, Forged Steel
4,750 psi (327.3 bar) maximum pressure

24X732 Pulsation Dampener, Stainless Steel
3,000 psi (206.7 bar) maximum pressure (not pictured)

H **24W670** Chemical Injector Kit
4,500 psi (310 bar) maximum pressure

Hydra-Clean Pressure Washers

Dimensions

Pneumatic Hydra-Clean

Wall Mount Package 247550

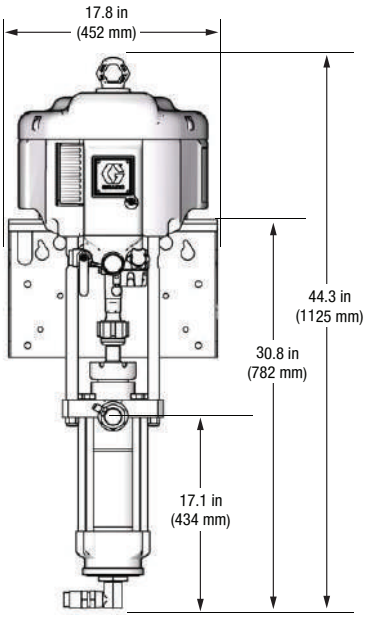

Refer to manual 312585 for additional package dimensions

Cart Mount Package 247549

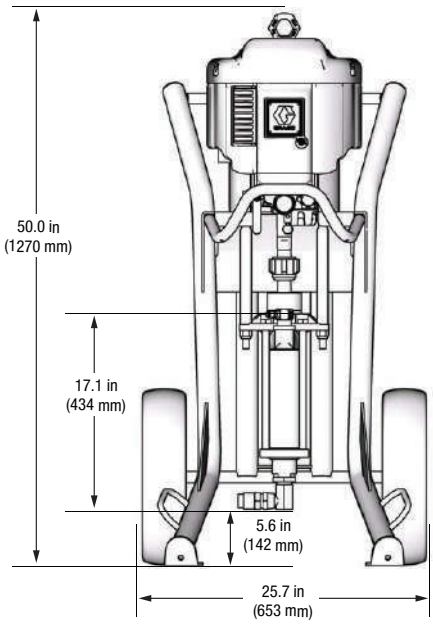

Hydraulic Hydra-Clean

Wall Mount 24W891

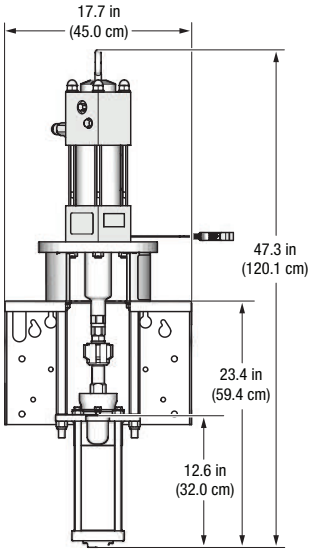

Wall Mount

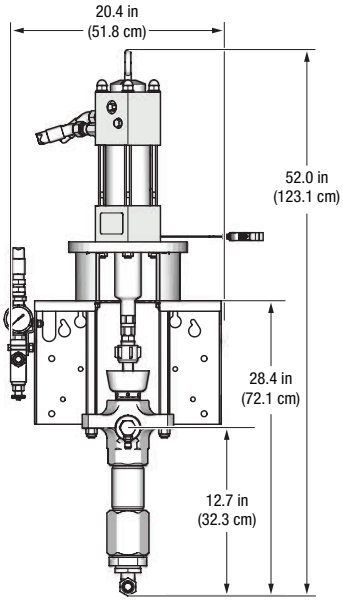

Cart Mount

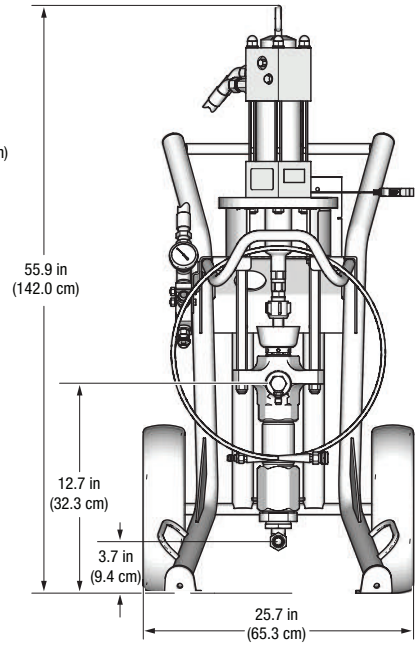

Refer to manual 334187 for additional dimensions.

Ordering Information

PART NUMBER	CONSTRUCTION	PACKING
226940	Drum/CS/SST (ETL-UL, CE)	T&L
226941	Drum/CS/SST (ETL-UL, CE)	PE
226942	Drum/SST (ETL-UL, CE)	PE
226943	Stubby/CS/SST (ETL-UL, CE)	L
226944	Stubby/CS/SST (ETL-UL, CE)	PE
226945	Stubby/SST (ETL-UL, CE)	PE
226946	Drum/CS/SST (CE)	T
226947	Drum/CS (CE)	R
226948	Stubby/CS (CE)	R
226951	Drum/CS (CE)	R
226952	Stubby/SST (CE)	R
226953	Drum/SST (CE)	R
237129	Drum/SST (CE)	T
237130	Stubby/CS (CE)	L
237131	Stubby/CS (CE)	T
237132	Stubby/SST (CE)	T
237133	Drum/CS (CE)	L
237134	Drum/CS (CE)	T

N = Neoprene
L = Leather
T = PTFE
R = Rubber
SST = 304 Stainless Steel
CS = Carbon Steel
PE = Polyethylene

Selector Tool

To order a FastFlo pump, use the online selector tool at **www.graco.com/pumpselectors** or contact your distributor.

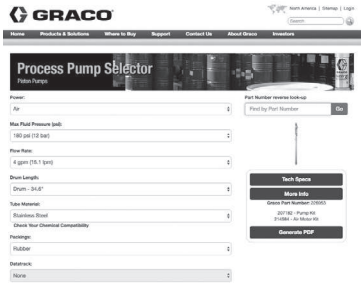

Technical Specifications

Fast-Flo 1:1	Priming Piston
Maximum fluid working pressure	180 psi (12.4 bar, 1.24 MPa)
Maximum pump speed	100 cpm
Pump cycles per gallon (3.8 l)	25
Maximum air input pressure	180 psi (12.4 bar, 1.24 MPa)
Maximum operating temperature	120°F (49°C)
Typical sound level	72 dBa
Air inlet	1/4 npt (f)
Fluid outlet	3/4 npt (f)
Weight	20 lbs (9.07 kg) Drum; 11 lbs (4.99 kg) Stubby
Instruction Manual	307427

Performance Charts

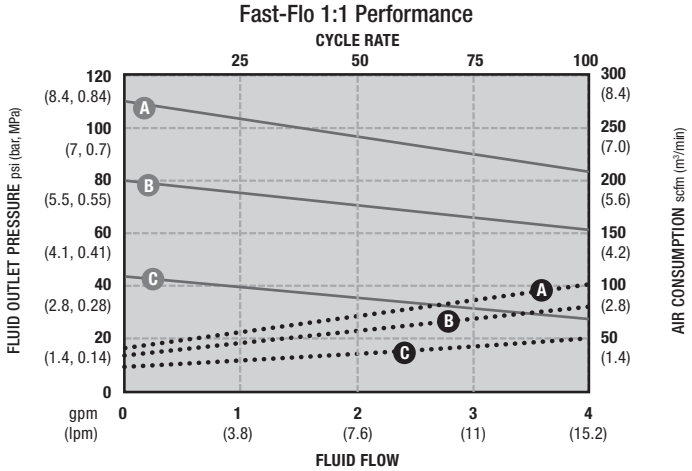

AIR PRESSURE	LEGEND
(A) = at 100 psi (7 bar, 0.7 MPa)	Air Consumption •••••
(B) = at 70 psi (4.8 bar, 0.48 MPa)	Fluid Pressure ———
(C) = at 40 psi (2.8 bar, 0.28 MPa)	

Dimensions

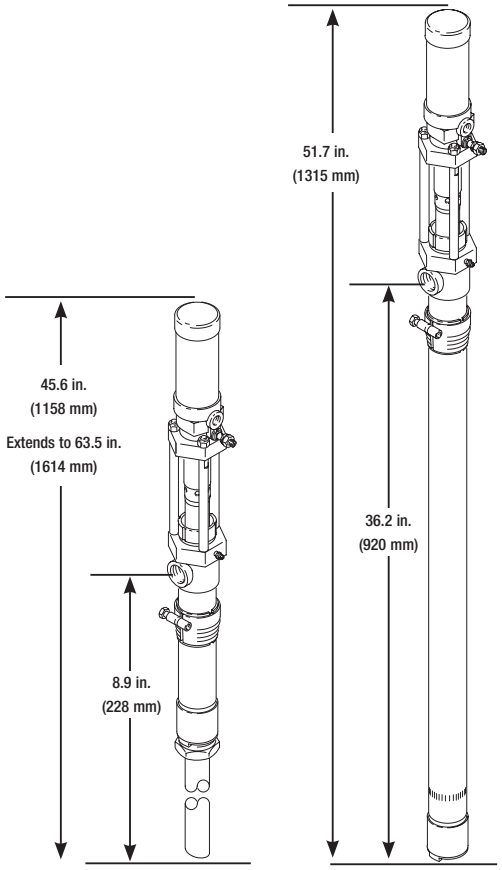

Piston Pumps for Ink Applications
Ink Applications

Selector Tool

To order a SoloTech pump, use the online selector tool at **www.graco.com/pumpselectors** or contact your distributor.

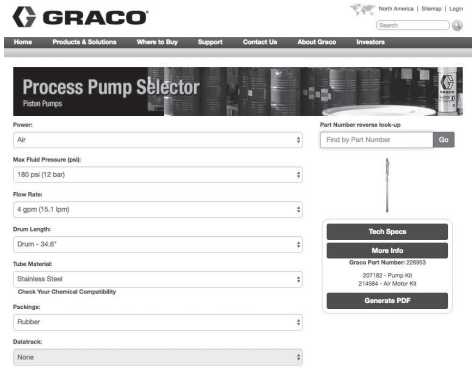

Ordering Information and Technical Specifications

Piston Pumps with Sealed Wet Cup

Ink Pump Package Part No.	Ratio	DataTrak	Remote DataTrak	Power Source	Displacement per Cycle	Maximum Air or Hydraulic Input Pressure psi (MPa, bar)	Maximum Fluid Working Pressure psi (MPa, bar)
258744	14:1			Air	500 cc	100 (0.7, 7.0)	1400 (9.7, 97)
258745	14:1	x		Air	500 cc	100 (0.7, 7.0)	1400 (9.7, 97)
258746	14:1		x	Air	500 cc	100 (0.7, 7.0)	1400 (9.7, 97)
258747	23:1			Air	200 cc	100 (0.7, 7.0)	2300 (15.9, 159)
258748	23:1	x		Air	200 cc	100 (0.7, 7.0)	2300 (15.9, 159)
258749	23:1		x	Air	200 cc	100 (0.7, 7.0)	2300 (15.9, 159)
258750	26:1			Air	500 cc	100 (0.7, 7.0)	2600 (17.9, 179)
258751	26:1	x		Air	500 cc	100 (0.7, 7.0)	2600 (17.9, 179)
258752	26:1		x	Air	500 cc	100 (0.7, 7.0)	2600 (17.9, 179)
258753	1.6:1			Hydraulic Oil	500 cc	1500 (10, 103)	2300 (15.9, 159)

Motor Conversion Kits

Part No.	Description
24C743	To install an L200CM Check-Mate displacement pump on an existing King air motor
24C744	To install an L500CM Check-Mate displacement pump on an existing King air motor
24D625	To install an L500CM Check-Mate displacement pump on an existing Viscount II hydraulic motor

Piston Pumps with Sealed Wet Cup	
Stroke length	
Pneumatic	4.75 in (120.65 mm)
Hydraulic	4.69 in (119.13 mm)
Maximum fluid operating temperature	180° F (82.3° C)
Air or Hydraulic Inlet Size	3/4 npt (f)
Fluid outlet size	200 cc displacement pump: 1 npt (f) 500 cc displacement pump: 1-1/2 npt (f)
Maximum pump speed	60 cpm

(Do not exceed maximum recommended speed of fluid pump, to prevent premature pump wear)

Other

Part No.	Description
222780	Floor Stand Kit See manual 307971

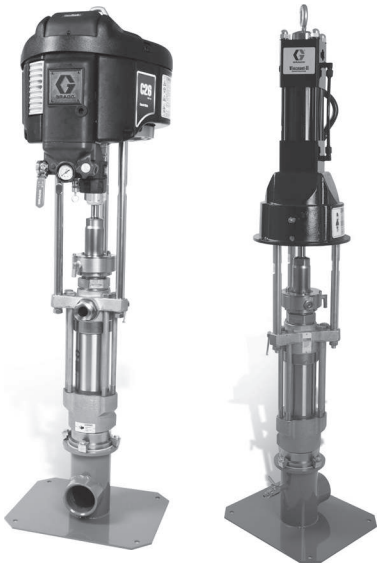

Pneumatic Hydraulic

Ordering Information and Technical Specifications

Name of Pump	Senator® 19:1	Viscount® II 1900	Bulldog® 31:1	Viscount II 3100
Lower size	800	800	800	800
Maximum fluid pressure	1900 psi (131 bar, 13.1 MPa)	1900 psi (131 bar, 13.1 MPa)	3100 psi (213 bar, 21.3 MPa)	3100 psi (213 bar, 21.3 MPa)
Maximum motor inlet pressure	100 psi (air) (6.9 bar, 0.69 MPa)	450 psi (oil) (31 bar, 3.1 MPa)	100 psi (air) (6.9 bar, 0.69 Mpa)	750 psi (oil) (51.7 bar, 5.1 MPa)
Flow rate @ 60 cpm	2.8 gpm (10.6 lpm)	2.8 gpm (10.6 lpm)	2.8 gpm (10.6 lpm)	2.8 gpm (10.6 lpm)
Cfm or gpm required per gallon	24 cfm	4.3 gpm (16.2 lpm)	32 cfm	4.3 gpm (16.2 lpm)
Fluid pump outlet size	1” npt (f)	1” npt (f)	1” npt (f)	1” npt (f)
Motor inlet size	3/4” npt (f)	3/4” npt (f)	3/4” npt (f)	3/4” npt (f)
Weight of pump	160 lb (73 kg)	177 lb (80 kg)	160 lb (73 kg)	177 lb (80 kg)
Instruction manual	308351	308351	308351	308351

Bin Supply	Senator 19:1	Viscount II 1900	Bulldog 31:1	Viscount II 3100
Pump	246941	246938	246940	246938
Air controls: FRL, 1/2”	217072		217072	
Air run away control, 3/4”	224040		224040	
Air speed control, 1/2”(f)	510441		510441	
Floor stand (3” inlet)	222780	222780	222780	222780
Hydraulic controls*		236865		236865
Outlet hydraulic hose connector 1”(m) x 1-1/2”(f), 1500 psi rated		Not included		Not included

Misc. Information	Senator 19:1	Viscount II 1900	Bulldog 31:1	Viscount II 3100
Pump lower section	246939	246939	246939	246939
Ram plate replacement seals	165601	165601	165601	165601

**Hydraulic controls include hydraulic flow and pressure control, ball valves, 3 ft supply and return hose*

19:1 Senator

31:1 Bulldog

Piston Pumps for Ink Applications

Ordering Information and Technical Specifications

Name of Pump	Bulldog 12:1	Viscount II 1200	King® 24:1	Viscount II 2400
Lower size	2100	2100	2100	2100
Maximum fluid pressure	1200 psi (82.8 bar, 8.28 MPa)	1200 psi (82.8 bar, 8.28 MPa)	2400 psi (165 bar, 16.5 MPa)	2400 psi (165 bar, 16.5 MPa)
Maximum motor inlet pressure	100 psi (air) (6.9 bar, 0.69 MPa)	750 psi (oil) (51.7 bar, 5.1 Mpa)	100 psi (air) (6.9 bar, 0.69 Mpa)	1500 psi (oil) (103 bar, 10.3 Mpa)
Flow rate @ 60 cpm	7.5 gpm (28.4 lpm)	7.5 gpm (28.4 lpm)	7.5 gpm (28.4 lpm)	7.5 gpm (28.4 lpm)
Cfm or gpm required per gallon	20 cfm	1.6 gpm (6 lpm)	25 cfm	1.6 gpm (6 lpm)
Fluid pump outlet size	1-1/2” npt (m)	1-1/2” npt (m)	1-1/2” npt (m)	1-1/2” npt (m)
Motor inlet size	3/4” npt (f)	3/4” npt (f)	3/4” npt (f)	3/4” npt (f)
Weight of pump	142 lb (65 kg)	196 lb (89 kg)	160 lb (73 kg)	196 lb (89 kg)
Instruction manual	308149	308149	308149	308149

Bin Supply	Bulldog 12:1	Viscount II 1200	King 24:1	Viscount II 2400
Pump	246935	246937	246936	246937
Air controls: FRL, 1/2”	217072		217072	
Air run away control, 3/4”	224040		224040	
Air speed control, 1/2”(f)	510441		510441	
Floor stand (3” inlet)	222780	222780	222780	222780
Hydraulic controls*		236865		236865
Outlet hydraulic hose connector 1”(m) x 1-1/2” (f), 1500 psi rated		Not included		Not included

Misc. Information	Bulldog 12:1	Viscount II 1200	King 24:1	Viscount II 2400
Pump lower section	246934	246934	246934	246934
Ram plate replacement seals	165601	165601	165601	165601

**Hydraulic controls include hydraulic flow and pressure control, ball valves, 3 ft supply and return hose*

12:1 Bulldog

Viscount II 2100

24:1 King

Ordering Information and Technical Specifications

Piston Pumps	President® 20:1
Lower size	450
Maximum fluid pressure	2000 psi (140 bar. 14 MPa)
Maximum motor inlet pressure	100 psi (7 bar, 0.7 MPa)
Flow rate @ 60 cpm	1.2 gpm (4.5 lpm)
Cfm or gpm required per gallon	35 cfm
Fluid pump outlet size	3/4” npt (f)
Motor inlet size	1/2” npt (f)
Weight of pump	50 lb (22.7 kg)
Instruction manual	308017

Bin Supply	President 20:1
Pump	246933
Air controls: FRL, 3/8”(f)	110150
Floor stand (3” inlet)	222780
Air run away control, 3/4”(f)	224040
Air speed control 1/2”(f)	510441

Misc. Information	President 20:1
Pump lower section	246932
Ram plate replacement seals	165601

20:1 President

Notes

Graco Standard Warranty

Graco warrants all equipment referenced in this document which is manufactured by Graco and bearing its name to be free from defects in material and workmanship on the date of sale by an authorized Graco distributor to the original purchaser for use. With the exception of any special, extended, or limited warranty published by Graco, Graco will, for a period of twelve months from the date of sale, repair or replace any part of the equipment determined by Graco to be defective. This warranty applies only when the equipment is installed, operated and maintained in accordance with Graco's written recommendations.

This warranty does not cover, and Graco shall not be liable for general wear and tear, or any malfunction, damage or wear caused by faulty installation, misapplication, abrasion, corrosion, inadequate or improper maintenance, negligence, accident, tampering, or substitution of non-Graco component parts. Nor shall Graco be liable for malfunction, damage or wear caused by the incompatibility of Graco equipment with structures, accessories, equipment or materials not supplied by Graco, or the improper design, manufacture, installation, operation or maintenance or structures, accessories, equipment or materials not supplied by Graco.

This warranty is conditioned upon the prepaid return of the equipment claimed to be defective to an authorized Graco distributor for verification of the claimed defect. If the claimed defect is verified, Graco will repair or replace free of charge any defective parts. The equipment will be returned to the original purchaser transportation prepaid. If inspection of the equipment does not disclose any defect in material or workmanship, repairs will be made at a reasonable charge, which charges may include the costs of parts, labor, and transportation.

THIS WARRANTY IS EXCLUSIVE, AND IS IN LIEU OF ANY OTHER WARRANTIES, EXPRESS OR IMPLIED, INCLUDING BUT NOT LIMITED TO WARRANTY OF MERCHANTABILITY OR WARRANTY OF FITNESS FOR A PARTICULAR PURPOSE.

Graco's sole obligation and buyer's sole remedy for any breach of warranty shall be as set forth above. The buyer agrees that no other remedy (including, but not limited to, incidental or consequential damages for lost profits, lost sales, injury to person or property, or any other incidental or consequential loss) shall be available. Any action for breach of warranty must be brought within two (2) years of the date of sale.

GRACO MAKES NO WARRANTY, AND DISCLAIMS ALL IMPLIED WARRANTIES OF MERCHANTABILITY AND FITNESS FOR A PARTICULAR PURPOSE IN CONNECTION WITH ACCESSORIES, EQUIPMENT, MATERIALS OR COMPONENTS SOLD BUT NOT MANUFACTURED BY GRACO. These items sold, but not manufactured by Graco (such as electric motors, switches, hose, etc.), are subject to the warranty, if any, of their manufacturer. Graco will provide purchaser with reasonable assistance in making any claim for breach of these warranties.

In no event will Graco be liable for indirect, incidental, special or consequential damages resulting from Graco supplying equipment hereunder, or the furnishing, performance, or use of any products or other goods sold hereto, whether due to a breach of contract, breach of warranty, the negligence of Graco, or otherwise.

FOR GRACO CANADA CUSTOMERS

The Parties acknowledge that they have required that the present document, as well as all documents, notices and legal proceedings entered into, given or instituted pursuant hereto or relating directly or indirectly hereto, be drawn up in English. Les parties reconnaissent avoir convenu que la rédaction du présente document sera en Anglais, ainsi que tous documents, avis et procédures judiciaires exécutés, donnés ou intentés à la suite de ou en rapport, directement ou indirectement, avec les procedures concernées.

Equipment Misuse Hazard

General Misuse: Any misuse of Graco equipment or accessories, such as over-pressurizing, modifying parts, using incompatible chemicals and fluids, or using worn or damaged parts, can cause them to rupture. Misuse of equipment can result in fluid injection, splashing in the eyes or on the skin, or other serious bodily injury, or fire, explosion or property damage. NEVER alter or modify any part of Graco equipment; doing so could cause the product to malfunction. CHECK all equipment regularly and repair or replace worn or damaged parts immediately. Always wear protective eye wear, gloves, clothing and respirator as recommended by fluid and solvent manufacturers.

System Pressure: Be sure that all equipment and accessories used are rated to withstand the applicable MAXIMUM WORKING PRESSURE. DO NOT exceed the maximum working pressure of any component or accessory used in a system.

Fluid and Solvent Compatibility: All chemicals used in a Graco sprayer must be compatible with wetted parts. Consult your chemical supplier to ensure compatibility. Do not use 1:1:1-trichloroethane, methylene chloride, other halogenated hydrocarbon solvents or fluids containing such solvents in this equipment, which contains aluminum and/or zinc parts. Such use could result in a serious chemical reaction, with the possibility of explosion, which could cause death, serious bodily injury and/or substantial property damage.

ABOUT GRACO

PROVEN QUALITY. LEADING TECHNOLOGY.

Founded in 1926, Graco is a world leader in fluid handling systems and components. Graco products move, measure, control, dispense and apply a wide range of fluids and viscous materials used in vehicle lubrication, commercial and industrial settings.

The company's success is based on its unwavering commitment to technical excellence, world-class manufacturing and unparalleled customer service. Working closely with qualified distributors, Graco offers systems, products and technology that set the quality standard in a wide range of fluid handling solutions. Graco provides equipment for spray finishing, protective coating, paint circulation, lubrication, and dispensing sealants and adhesives, along with power application equipment for the contractor industry. Graco's ongoing investment in fluid management and control will continue to provide innovative solutions to a diverse global market.

GRACO LOCATIONS

MAILING ADDRESS
P.O. Box 1441
Minneapolis, MN 55440-1441
Tel: 612-623-6000
Fax: 612-623-6777

AMERICAS

MINNESOTA
Worldwide Headquarters
Graco Inc.
88-11th Avenue N.E.
Minneapolis, MN 55413

EUROPE

BELGIUM
European Headquarters
Graco N.V.
Industrieterrein-Oude Bunders
Slakweidestraat 31
3630 Maasmechelen,
Belgium
Tel: 32 89 770 700
Fax: 32 89 770 777

ASIA PACIFIC

AUSTRALIA
Graco Australia Pty Ltd.
Suite 17, 2 Enterprise Drive
Bundoora, Victoria 3083
Australia
Tel: 61 3 9468 8500
Fax: 61 3 9468 8599

CHINA
Graco Hong Kong Ltd.
Shanghai Representative Office
Building 7
1029 Zhongshan Road South
Huangpu District
Shanghai 200011
The People's Republic of China
Tel: 86 21 649 50088
Fax: 86 21 649 50077

INDIA
Graco Hong Kong Ltd.
India Liaison Office
Room 443, Augusta Point
Regus Business Centre 53
Golf Course Road
Gurgaon, Haryana
India 122001
Tel: 91 124 435 4208
Fax: 91 124 435 4001

JAPAN
Graco K.K.
1-27-12 Hayabuchi
Tsuzuki-ku
Yokohama City, Japan 2240025
Tel: 81 45 593 7300
Fax: 81 45 593 7301

KOREA
Graco Korea Inc.
Shinhan Bank Building
4th Floor #1599
Gwanyang-Dong, Dongan-Ku,
Anyang-si, Korea 431-060
Tel: 82 31 476 9400
Fax: 82 31 476 9801

SALES/ DISTRIBUTION/ SERVICE

Call today for product information or to request a demonstration.

877-84GRACO (1-877-844-7226) or visit us at www.graco.com.

Graco Inc. is registered to I.S. EN ISO 9001

North America
Customer Service
800-328-0211
Fax 877-340-6427

©2001-2015 Graco Inc. 300435 Rev. T 3/17 All written and visual data contained in this document are based on the latest product information available at the time of publication. Graco reserves the right to make changes at any time without notice. All other brand names or marks are used for identification purposes and are trademarks of their respective owners.