PMG Buyer's Guide

Fluid Handling Equipment for Industrial and Commercial Applications

Pumps | Meters | Reels | Fluid Management | Fluid Reclaim Systems

PROVEN QUALITY. LEADING TECHNOLOGY.

Table of Contents

Page

About Graco 4-6
Graco Resources 6

Fluid Management Systems

Fluid Management System Selection Guide 9
Benefits of Pulse™ Pro Fluid Management 10
Steps to Build Your Pulse Pro System 11
Pulse Hub 12-13
Pulse Dispense Meter 14-15
Pulse Tank Level Monitor (TLM) 16
Pulse Pump Air Control (PAC) 17
Pulse Extender and Remote Extender 18
Pulse Packages and Accessories 19
Steps to Build Your Pulse FC System 20
Pulse FC Software 21
Pulse FC Starter Kit 22
SD™ Preset Dispense Meters 23-24
Pulse FC Packages and Accessories 25
Traditional Box – Wired Fluid Control Components 26

Oil Pumps

Oil Pump Selection Guide 28-29
LD Series™ Oil Pumps 30-45
LD Series™ Oil Pump Accessories 46-47
Mini Fire-Ball® 225 Oil Pumps 48-51
Fire-Ball® 300 Oil Pumps 52-56
Fire-Ball® 425 Oil Pumps 57-60
Fast-Ball® Oil Pumps 61-62
Oil Pump Accessories 63-68
NXT™ High-Flo® Oil Pumps 69-71
NXT Dura-Flo® Oil Pumps 72-75
Dyna-Star® Hydraulic Oil Pumps 76-77
Power-Star™ Hydraulic Oil Pumps 78-79
Manually Operated Oil Pumps 80-81

Oil Meters

Graco Dispense Meters 84
LDP5 Electronic Preset Meters 85-87
EM® Series Electronic Meters 88-90
SD Series™ Electronic Meters 91-93
IM5 In-Line Electronic Meter 94
IM20 In-Line Electronic Meter 95
SDI15 In-Line Electronic Meter 96
Mechanical Meters 97-99
SDV15 Control Valve 100-101
XDV20 Control Valve 102-103
Dispense Consoles 104-105

Grease Pumps

Grease Pump Selection Guide 108-109
LD Series™ Grease Pumps 110-114
LD Series™ Grease Pump Accessories 115-116
Mini Fire-Ball® 225 Grease Pumps 117-120
Fire-Ball® 300 Grease Pumps 121-128
Fire-Ball® 425 Grease Pumps 129-135
Grease Pump Accessories 136-139
GT 750 36:1 Grease Pumps 140-141
NXT™ Check-Mate® Grease Pumps 142-146
Dyna-Star® Hydraulic Grease Pumps 147-148
Viscount® II Grease Pumps 149-150
Manually-Operated Grease Pumps 151

Grease Dispense Valves and Guns

Dispense Valve and Gun Selection Guide 152
Accu Shot™ Metered Grease Valve 153
Pro Shot™ Non-Metered Valve 154
Power Shot™ Booster Valve 155
Heavy-Duty Grease Guns 156
Accessories 157-159

Page

Diesel Exhaust Fluid (DEF) Systems

How to Choose Your Graco DEF Solution 162
LD Blue Electric Pumps and Packages 163-165
SD Blue AODD Pumps and Packages 166-168
LD Blue Manual Pumps 169
DEF Meters 170-171
DEF Dispense Nozzles 172-173
DEF Hose Reels 174
DEF System Accessories 175-179

Specialty Pumps

Diaphragm Pump Selector 182
Husky 1050 AODD Pump 183-184
Husky 307 AODD Pump 185
Husky 515 AODD Pump 186
Husky 716 AODD Pump 187
Husky 1590 AODD Pump 188
Husky 2150 AODD Pump 189
Husky 3300 AODD Pump 190
Diaphragm Pump Packages 191-192
Diaphragm Pump Accessories 193-194
Undercoating and Rustproofing Pumps 195-196
Undercoating and Rustproofing Pump Packages 197-198
Undercoating and Rustproofing Accessories 199
Bulldog® 43:1 Oil Pump 200-201
Fast-Flo® 1:1 Pumps 202-203
Fast-Flo 1:1 Pump Accessories 204-205
APEX™ and APEX On-Demand 206-209
Piston Hand Pumps 210

Hose and Cord Reels

Hose Reel Selection Guide 212
LD™ Series Enclosed Hose Reels 214-216
SD™ Series Hose Reels 217-223
SD™ Series Cord and Light Reels 224-227
XD™ Series 10/20 Hose Reels 228-233
XD™ Series 30 Hose Reels 234-238
XD™ Series 40/50 Hose Reels 239-244
XD™ Series 60/70/80 Powered Hose Reels 246-257

Fluid Reclaim Equipment

Oil King™ 260
Coolant King™ 261
Oil Ace™ 262-264
16-Gallon Mobile Receiver 265
Big Hauler™ Truck Drain 265
Track Receivers 266
Diaphragm Evacuation Pumps 267
Evacuation Pump Packages 268-270
Fluid Reclaim Accessories 271-273

Accessories

Air Regulators and Valves 276
Air Valves 277
Hose Fittings 278
Lubrication Hoses 279
Air/Water Hoses 280
Quick Connect Fittings 281
Adapters and Fittings 282-283

Warranty Information 284-286

Index 287-294

About Graco

Established in 1926, Graco has built a worldwide reputation for high quality, reliable and technically advanced products, world-class manufacturing and outstanding customer service. Headquartered in Minneapolis, Minnesota, Graco works closely with distributors around the world to offer innovative products that set the quality standard for spray finishing, paint circulation, lubrication, sealant and adhesives dispensing, process application and contractor power equipment. These best-in-class products are manufactured in the U.S. and China and supplied through our distribution centers around the world. Every day, Graco's fluid-handling equipment and systems move, measure, mix, control, dispense and spray a variety of fluids and materials.

Lubrication Equipment Division

From the first air-powered grease gun to our industry-leading Fire-Ball pump, Graco's Lubrication Equipment Division is what started it all. We manufacture equipment to monitor, control, manage and dispense fluids. Offering innovative equipment for all your vehicle services, industrial and automatic lubrication needs. We offer a full range of high-quality pumps, meters, valves, hose reels and accessories to increase production and reduce waste and downtime.

Graco offers a full line of quality equipment to meet the varying needs of vehicle maintenance and repair. Streamline your workflow and move more lubricants through your shop. We offer reliable, high-quality equipment you can depend on for fuel, diesel, anti-freeze, oil and grease. Our versatile fluid inventory control and management systems are designed to accurately track the use of oil, grease and other automotive fluids at vehicle maintenance facilities, and our lubrication equipment ensures you deliver fluids to the right spot in your shop. From light-duty applications to high-performance concepts designed for heavy-duty jobs, our equipment is known for its rugged, durable and long-life design.

More than **3,300** distribution partners offer local service and support in more than **100** countries all over the world

Machining is a core competency of Graco – it enables complete control of the component parts needed to ensure precise metering, reliable dispensing and fluid movement.

When it comes to **research and development**, Graco is one step ahead, ensuring we offer the best possible solutions. To guarantee superior quality and to meet the changing requirements of your markets, we prioritize investing resources in research and development. Innovative technologies and extensive field testing are a natural part of our process to develop new products. Also, every aspect of our production is subject to constant testing and evaluation. It's the foundation to deliver products with long service life and low cost of ownership. The insurance to help you grow your business.

We understand our customers. We build a partnership, working and striving towards new solutions, together. We are at the service of our distribution partners, supporting you along the way. Look at Graco not just as a manufacturer or supplier but as an extension of your business. Our dedicated and experienced teams offer unique capabilities to help you meet your specific goals and challenges.

- Innovative, high-quality products with unique features
- A professional warranty and high service rate
- Purchasing conditions aimed at profitable growth
- A committed sales and marketing team for tailor-made support of expanding sales opportunities
- Continuous technical, commercial and hands-on training

Our world-class distribution centers and unrivaled global distributor network give Graco a unique industry advantage that allows us to rapidly deliver our products to end users worldwide.

Exceeding customer expectations is our priority. Our multilingual team of customer service specialists and technical engineers are available to you. Graco offers instructor-lead training sessions in the United States, EMEA and Asia Pacific. These courses teach theory and hands-on practical applications, covering basic operational to advanced technical knowledge. Each training session can be adapted to your specific needs.

Offering more than just products, we are focused on building relationships, identifying and developing business opportunities with you. Our sales team is available to collaborate, define strategies to assist in navigating through our product offering and provide advice on promotional activities.

Graco's marketing specialists investigate ways to expand the market and develop the right technologies for any application, in close cooperation with distributors and field users. We offer tailor-made promotional and communication support, from defining strategic requirements to developing marketing campaigns, organizing events and creating digital or printed material.

Did You Know?

Graco also manufactures and sells a complete line of automatic lubrication systems and accessories!

Keep your equipment running at peak performance. Graco automatic lubrication solutions give you the ultimate machine performance by lubricating key wear points – the right amount of lubricant, at the right time, in the right location. Graco has automatic lubrication solutions for the industrial, on-road mobile, off-road mobile, energy industries and more.

Visit www.graco.com/autolube

Graco Resources

Graco has developed tools and resources to help educate and better serve our distribution channel. Check them out today:

Graco Sales Book

Stay up-to-date with the newest information from Graco by downloading the Graco Sales Book App.

Graco Sales Book is an innovative mobile application, designed to give Distributors access to Graco product information, including brochures, manuals, videos, and training documents – all on your mobile device.

Download today by visiting
Salesbook.graco.com

Graco University

Graco University is an e-learning module that can be accessed online, anytime, and contains assets that help educate you on Graco products.

This innovative online learning program gives the tools to stay on the leading edge with a variety of resources such as virtual and instructor led courses, online books, live and on-demand video presentations, and much more.

Learn more today at
training.graco.com

Graco Gear

Graco Gear is your one-stop shop for branded merchandise and other tools that will help you build customer relationships.

Order shirts, hats, banners, and more whenever you need! You can even add your logo for a small fee. Most orders ship next day.

Start shopping today at
gracogear.com

FLUID MANAGEMENT SYSTEMS

Page

Fluid Management System Selection Guide 9
Benefits of Pulse® Pro Fluid Management 10
Steps to Build Your Pulse Pro System 11
Pulse Hub 12-13
Pulse Dispense Meter 14-15
Pulse Tank Level Monitor (TLM). 16
Pulse Pump Air Control (PAC). 17
Pulse Extender and Remote Extender 18
Pulse Packages and Accessories. 19
Steps to Build Your Pulse FC System. 20
Pulse FC Software 21
Pulse FC Starter Kit 22
SD™ Preset Dispense Meters. 23-24
Pulse FC Packages and Accessories 25
Traditional Box – Wired Fluid Control Components. . . 26

GRACO®

Fluid Management

GRACO

Choosing a Graco Fluid Management Solution

FEATURE	Traditional Box	Pulse FC	Pulse Pro
Control. Regulate the amount of fluid that's dispensed to reduce spillage and waste.			
Allow control of dispenses	✔	✔	✔
Restrict the quantity of fluid	✔	✔	✔
Ensure correct amount of fluid	✔	✔	✔
Meters. Put control into the hands of your technicians so they can be more productive, accurate and accountable.			
Works with petroleum, synthetic based oils, anti-freeze	✔	✔	✔
Works with windshield wash solvent	✔		✔
Meter displays quantity dispensed		✔	✔
Fluid measured at dispense point (highly accurate)		✔	✔
Installation. Seamless integration simplifies dispenses without compromising workflows or productivity.			
Works with oil bar	✔	✔	✔
Wire-free installation		✔	✔
Wireless communication			✔
Pump air control (PAC)	✔		✔
Flexibility. Accommodate emerging demands to maintain or expand productivity and profitability.			
Works with mobile roll-around packages		✔	✔
Easy expansion with additional fluids		✔	✔
Easy upgrade to comprehensive fluid management		✔	N/A
User Interface. Access the information necessary to make more informed decisions quickly.			
Simple PC-based software		✔	
No software to install			✔
Accessible from any PC, phone or tablet			✔
Fluid Management. Improve accountability for your entire operations.			
Track dispenses by invoice or work order			✔
Track dispenses by technician			✔
Record fluid type and quantity dispensed			✔
Keeps technician in service bay			✔
Fluid Inventory. Simplify how you re-order and store inventory to minimize delays.			
Monitor tank levels (TLM)			✔
Dealer Management Solution (DMS) integration			✔
Reporting. Capture critical information and insights to simplify decision-making.			
Print on dispense			✔
Automated customizable reports			✔
Automated alerts to simplify inventory tasks			✔
Software updates		✔	✔
Permanent record of all dispenses or authorizations		✔	✔

Pulse® Pro Fluid Management simplifies how forward-thinking shops track and manage bulk fluids in real time – adding more transparency and accountability to drive productivity and profitability.

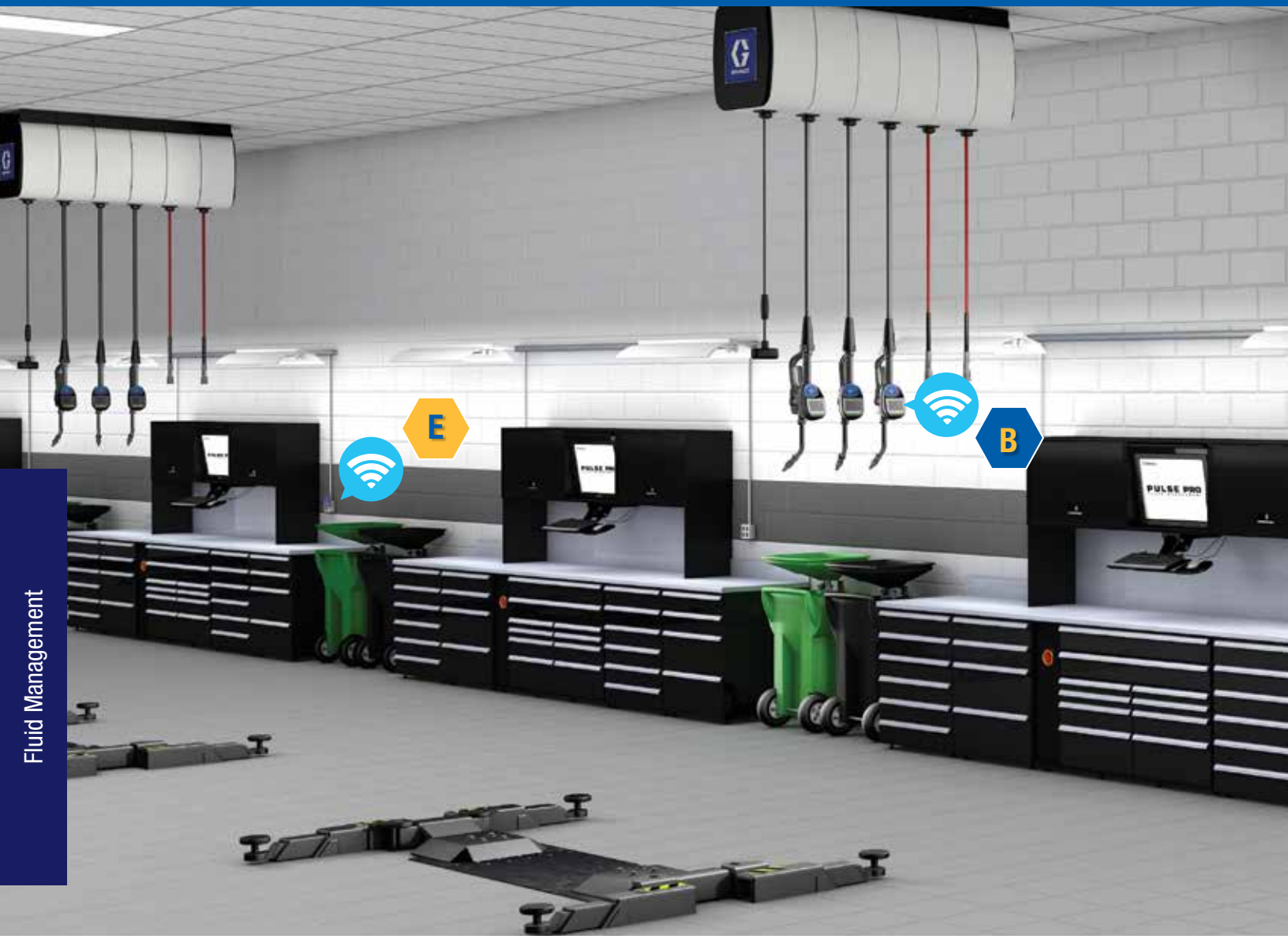

Benefits of Pulse Pro Fluid Management

Transparency. Monitor every drop, every time – automatically – and minimize shrinkage, rounding and discrepancies.

Accountability. Track issues to the source via advanced technology, including automated alerts and customizable reports.

Integration. Capture data, integrate it with popular DMSs and share it with other stakeholders quickly.

Portability. Pair with mobile dispense units and drums easily to reduce extra steps and hassles for technicians.

Scalability. Add Pulse into almost any environment quickly, and even retrofit applications or multiple buildings within the same facility.

Accurate billing. Automatically assign every ounce of fluid directly to a work order to simplify billing and maximize profit margins.

Simplicity. Avoid surprises, interruptions and delays. Fluids are tracked and recorded instantly and automatically.

Inventory management. Monitor fluid inventory and schedule refills to minimize delays and excessive costs.

Steps to Build Your Pulse Pro System:

A Hub with Software

1 REQUIRED

B Add Meters

MINIMUM 1 REQUIRED

Add Accessories

C Tank Level Monitor (TLM)

Tank Level Monitor can be used as a standalone product.

OPTIONAL

D Pump Air Controller (PAC)

OPTIONAL

E Pulse Extender and Pulse Remote Extender

OPTIONAL

F Roll Around Package

OPTIONAL

G Oil Bar Dispenser

OPTIONAL

A Pulse Hub

Simply connect the Pulse Hub to a power source and access your local network to get started. The self-contained device includes everything necessary for users to access monitoring and reporting tools instantly from any network-connected PC, tablet or smartphone.

2 Year Warranty!

Pulse Software

Pulse Pro Fluid Management software is pre-installed on the Pulse HUB and focused on simple intuitive design with powerful information at your fingertips. Get a quick consolidated view of all dispenses for the entire shop via specifically designed web page and easy-to-use software. Track tank levels at a glance. Generate customizable reports and automated e-mail alerts to share critical information with other key decision-makers. For further efficiency and automation, Pulse software can be integrated with your DMS through Pulse standard integrations or our generic third-party interface.

Wireless Communication

Communicates with Pulse devices.

No PC Software to Install

Pulse software delivered via web pages to any PC, tablet or phone.

Status Lights

Quickly verify Hub status.

Ethernet and Wi-Fi

LAN connection for flexible installations.

Built-In Backup

Includes SD card for database backup and restore.

Built-In Computer

Runs custom operating system to eliminate common PC operating system issues.

Universal Power Connections

Facilitates installation using 100–240 VAC electrical outlets.

Easily Updates

Automatic updates through internet connection.

Features and Benefits

- No PC software to install – Pulse Hub generates a local web page
- Responsive web design – Use any-size screen, from a PC to a phone
- Consolidated dispense queue – Find everything you need in one convenient table
- Advanced reporting – Create and schedule automated reports to track history and fluid usage
- Informative and preventive alerts – The software offers over two dozen alert activities
- Automatic software updates – Software notifies you when updates are ready to install

Technical Specifications

Weight	1.0 lb (454 gm)
Power Supply	
Input Power	100–240 VAC line voltage (0.05 A)
To Hub	5 VDC (0.5 amps)
Warranty	Two years electronics

A Ordering Information

Part Number	Description
24Z978	Hub for non-European installation with global power adapter

DMS Integration Options for Pulse Pro

An integration, put simply, is the communication between two separate business systems. Pulse uses integrations to provide enhanced control and monitoring for fluid dispenses.

Option 1 – Partner Integrations

AssetWORKS
- Requires FleetFocus: FA or M5 with FluidFocus Module
- Communication through Enterprise Asset Management System

CDK Global
- Requires CDK Drive DMS
- Communication through CDK's Third-Party Access Program

Dealertrack
- Requires Dealertrack DMS
- Communication through Dealertrack's Opentrack API

procede software
- Requires Excede v9.22+ with Excede Database
- Communication through Excede API v2.0

PBS
- Requires PBS DMS
- Communication through PBS Partner Hub

Reynolds & Reynolds RCI
- Requires ERA
- Communication through RCI Web Service

Option 2 – Communication through Graco Third Party Interface

PULSE FLUID MANAGEMENT DMS INTEGRATION
- Requires End-user developed integration for non-supported DMS

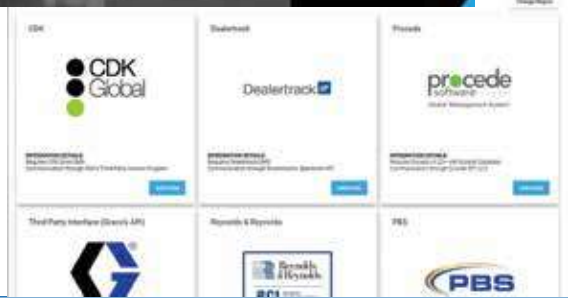

How It Works

The interface to business systems or DMS provides two important basic functions:

1 WORK ORDER VALIDATION

With DMS integration, dispenses occur only when a valid work order exists.

Work Order or Technician PIN → DMS

Authorization to Dispense ← DMS

2 WORK ORDER POSTING

Pulse software communicates with the DMS, posting the dispense to the work order.

Post Dispense → DMS

Confirm Posting ← DMS

Ordering Information

Interface Activation Codes

Part Number	Description
25R975	Pulse software with CDK Global Drive
25R976	Pulse software with Dealertrack
25R977	Pulse software with AssetWORKS
25R978	Pulse software with Reynolds & Reynolds
25R979	Pulse software with Procede Software – 2nd site
25R980	Pulse software with Procede Software
25R981	Pulse software with PBS

Oil | Gear Lube | Anti-Freeze | Washer Fluid | ATF

B Pulse Dispense Meter

The dispense meter is durable and easy to use, giving technicians everything they need at their fingertips. PINs and other data can be entered in moments via a larger, more intuitive display. NFC tags can be used for immediate PIN entry and faster access to work orders.

5 Year Warranty!

Large, Intuitive Display

High-contrast display for low- and bright-light conditions.

Faster PIN Entry

Built-in NFC reader and simple, efficient controls.

Wireless Communication

Communicates dispense information with Hub.

Ergonomic Design

Lower button placement.

Fluid Extension Kits

Choose from rigid, flexible or gear lube extensions with automatic flush-mount nozzle design.

Long Battery Life

Uses four off-the-shelf AA batteries – easy to replace.

Long-Life Valve Design

Cartridge design for long life and easier repair.

Protective Trigger Guard

Prevents accidental dispenses.

Fluid Management

Technical Specifications

Flow Range*	0.25 to 18 gpm (0.9 to 68 lpm)
Maximum Working Pressure	1,500 psi (103.4 bar)
Units of Measure (factory set to quarts)	Pints, quarts, gallons, liters
Weight	5.3 lbs (2.4 kg)
Inlet	1/2 in NPT or 3/4 in NPT
Outlet	3/4 in straight thread O-ring boss
Dimensions (without extension)	
Length	13 in (33 cm)
Width	3.75 in (9.5 cm)
Height	5.75 in (14.6 cm)
Maximum Recorded Dispense	999.99 units
Operating Temperature Range	4°F to 158°F (-16°C to 70°C)
Storage Temperature Range	-40°F to 158°F (-40°C to 70°C)
Battery**	4 AA alkaline or lithium batteries
RF Frequency Band	2,400 to 2,483.5 MHz
Maximum RF Transmit Power	8 dBm
Wetted Parts	Aluminum, stainless steel, PBT, nitrile rubber, zinc-plated carbon steel, nickel-plated carbon steel
Fluid Compatibility	Anti-freeze, gear oil, crankcase oil, ATF, windshield wash (up to 50% alcohol-based solutions)
Meter Accuracy†	+/- 0.5 percent
Warranty	Five year structural, 3 years electronics, 1 year wear components

**Tested in 10W motor oil. Flow rates vary with fluid pressure, temperature and viscosity.*
***Battery required to meet life expectancy: Energizer® Alkaline E91.*
†At 2.5 gpm (9.5 lpm), at 70°F (21°C), with 10W oil and 1 gallon dispensed. May require calibration; out-of-box accuracy is +/- 1.25 percent.

B Ordering Information

8 gpm (30 lpm) Meters

Fluid	Extension	Nozzle	Size (in)	Part Number
Oil	Flexible	Automatic Quick-Close	1/2	25M319
	Rigid			25M317
Anti-Freeze	Flexible	Manual Anti-Freeze		25M320
	Rigid			25M318
Gear Lube	Gear Lube	Manual		25M326
Windshield Wash	Rigid	None		25M328

18 gpm (68 lpm) Meters

Fluid	Extension	Nozzle	Size (in)	Part Number
Oil / Anti-Freeze	Flexible	Manual High-Flow	1/2	25M324
	Rigid			25M323
	Flexible	Manual High-Flow	3/4	25M330
	Rigid			25M329

Accessories

Nozzle and Extension Kits

	Extension	Fluid	Nozzle Description	Part Number	Compatible Meters
	Rigid	Oil	Non-drip, quick-close	255852	25M317
		Anti-freeze	Non-drip, quick-close	26C267	25M318
		Oil/Anti-freeze	High-flow, non-drip, quick-close	255857	25M323 / 25M329
	Rigid	Gear lube	Non-drip, quick-close	255854	25M326
	Flexible	Oil	Automatic, non-drip, quick-close	255853	25M319
		Anti-freeze	Non-drip, quick-close	26C268	25M320
		Oil/Anti-freeze	High-flow, non-drip, quick-close	255858	25M324 / 25M330
	Nozzle Only	Oil	Automatic, non-drip, quick-close	17R220	8 gpm oil meters
		Anti-freeze	Non-drip, quick-close	17T207	8 gpm anti-freeze meters
		Oil/Anti-freeze	High-flow, non-drip, quick-close	255461	18 gpm meters
	Nozzle Only	Gear lube	Non-drip, quick-close	255470	8 gpm gear lube meters

NFC Tags

	Part Number	Description
	131462	NFC tags for user identification with meter. 25-pack, blue.

Hose Identification Wraps

Vinyl hose wrap for easy identification of meter fluid.

	Part Number	Description
	17S659	Red
	17S660	Blue
	17S661	Green
	17S662	Yellow
	17S663	White

Swivel Covers / Impact Protection

	Part Number	Description
	15T366	Black swivel cover (standard color with meter)
	15T367	Red swivel cover
	15T368	Blue swivel cover
	15T369	Green swivel cover
	15T370	Yellow swivel cover
	131226	Pulse / SD meter boot

Pulse Meter Filter Kits

Part Number	Description
25D906	Filter kit includes filters/strainers (15M308) and O-rings (155332)

Oil | Gear Lube | Anti-Freeze | Washer Fluid | ATF

C

Pulse Tank Level Monitor (TLM)

Measure your largest tanks accurately with minimal effort. The monitor's ultrasonic sensor records the tank level and can be configured to e-mail a daily report to key stakeholders detailing tank volumes, low- or high-level warnings and more.

2 Year Warranty!

Simple Wireless Setup

Automatic network identification.

Long Battery Life

Allows for remote installations. Uses four off-the-shelf AA batteries – easy to replace.

Built-In Display

Real-time level visible from built-in display.

Supports Multiple Tank Shapes

Ability to input strapping table for any tank shape.

Tough Exterior

Sealed enclosure to accommodate outdoor usage.

Compact Design

Easily fits into more spaces.

On-Demand Readings

Ability to take reading at any time.

C

Ordering Information

Part Number	Description
25M449	Tank Level Monitor (TLM)

Technical Specifications

Ultrasonic Tank Depth Measurement range (Not for use in pressurized tanks)	5 in to 30 ft (12.7 cm to 9.14 m)
Fluid Level Measurement Accuracy	+/- 1.8 in (4.57 cm)
Mounting	1.5 in and 2 in threaded NPT connector (Adapter for BSPP and BSPT thread options available)
Weight (with batteries installed)	1.25 lb (567 g)
RF Frequency Band	2,400 to 2,483.5 MHz
Operating Temperature Range (Display will not function below 32°F [0°C])	-22°F to 185°F (-30°C to 85°C)
Storage Temperature Range	-40°F to 185°F (-40°C to 85°C)
Batteries	Four AA alkaline
Enclosure	IPX5
RF Communication	2,400 to 2,483.5 MHz
Vertical Tanks	
Maximum Volume	999,999 gal (999,999 l)
Maximum Height	30 ft (9.14 m)
Cylindrical Tanks	
Maximum Volume	999,999 gal (999,999 l)
Maximum Height	30 ft (9.14 m)
Maximum Length	30 ft (9.14 m)
Maximum Width	30 ft (9.14 m)
Fluid Compatibility	Automatic transmission fluid, anti-freeze, window wash, coolant, waste water
Warranty	Two years electronics

D

Pulse Pump Air Control (PAC)

Prevent unauthorized access to fluid inventory. Pump air supply is shut off automatically after the dispense, preventing spills and expensive cleanup if a broken line occurs. Pump operation is enabled only when a dispense has been activated from the meter.

2 Year Warranty!

Easy Installation

Built-in mounting bracket.

Simple Wireless Setup

Automatic network identification.

High-Volume Air Valve

Supports a variety of pumps.

Multiple Thread Options

NPT and BSPP air valve options.

Compact Design

Allows for mounting directly on pump or in tight spaces.

Rugged Exterior

Sealed enclosure to protect internal components.

Multiple Wiring Options

NEMA 5-15 plug or flying leads.

D

Ordering Information

Part Number	Description
24Z728	NPT with NEMA 5-15 plug

Technical Specifications

Minimum Operating Pressure	36 psi (0.25 MPa, 2.5 bar)
Maximum Operating Pressure	145 psi (1.0 MPa, 10 bar)
Maximum Air Flow	93 SCFM (2.6 m^3/min)
Power Supply	100–240 VAC line voltage, 24 VDC solenoid
Power Cord	
Model 24Z676, 24Z677	6 ft SJOOW, 3-wire, 18-gauge cable with flying leads
Model 24Z728	Power cord with integrated NEMA 5-15 plug
Current	25 to 60 mA
RF Frequency Band	2,400–2,483.5 MHz
Connection Ports Size (inlet, outlet, exhaust)	
Model 24Z676, 24Z728	3/8 in NPT
Model 24Z677	3/8 BSPP
Operating Temperature Range	14°F to 122°F (-10°C to 50°C)
Storage Temperature Range	-40°F to 185°F (-40°C to 85°C)
Weight	2.44 lbs (1.11 kg)
Dimensions	
Length	9.5 in (241.3 mm)
Width	2.25 in (57.2 mm)
Height	3.75 in (95.3 mm)
Warranty	Two years electronics

E

2 Year Warranty!

Pulse Extender

The Pulse wireless network can easily be expanded to accommodate large shops or a large number of devices. Simply plug the Extender into wall power to extend the network.

Expands Pulse Network

Supports 20 devices and extends the network range.

Simple Wireless Setup

Automatic network identification.

Integrated Electrical Plug

Simply plugs into wall.

Compact Design

Place conveniently in standard electrical outlet locations.

Technical Specifications

Operating Temperature	32°F to 158°F (0°C to 70°C)
Power Input	Universal AC input (85 VAC to 265 VAC)
Length	2.87 in (7.3 cm)
Width	1.97 in (5.0 cm)
Height	1.37 in (3.5 cm)
Weight	2.50 oz (70.9 g)
Warranty	Two years electronics

E Ordering Information

Part Number	Description
17F885	Extender (Type A)

Pulse Remote Extender

The Pulse wireless network can easily be expanded to accommodate devices in secondary on-site buildings. Connect the Remote Extender to wall power and local network via Ethernet or Wi-Fi to extend the network.

2 Year Warranty!

Expands Pulse Network

Supports 20 devices and extends the network range.

Simple Wireless Setup

Automatic network identification.

Multiple Network Connection Options

Utilizes local network Ethernet or Wi-Fi to communicate back to Hub.

Compact Design

Easy to place even in tight spaces.

Electrical Power

Includes plug-in power adapter.

Technical Specifications

Connections	Ethernet or Wi-Fi
Ethernet	10/100Base-T
Wi-Fi	802.11 b/g/n
Operating Temperature	32°F to 104°F (0°C to 40°C)
Length	3 in (7.62 cm)
Width	3 in (7.62 cm)
Height	1 in (2.54 cm)
Warranty	Two years electronics

E Ordering Information

Part Number	Description
17F878	Remote Extender with global power adapter

F Ordering Information

Roll Around Package

Pulse Pro Fluid Management wireless technology allows you to control your mobile drums and dispenses by providing security for expensive drums of synthetic and semi-synthetic fluids. Each package contains everything you need to manage your drums in existing Pulse installations. Drum not included.

Package Number	Extensions	Package Includes					
		Meter	Pump	Downtube	Drum Cart	Air Regulator	Hose
25D948	8 GPM, Rigid	25M317	24G576	16F878	24F915	24H420	24H865
25D952	8 GPM, Flexible	25M319					
25D953	8 GPM, Gear Lube	25M326					

G Ordering Information

Oil Bar

Part Number	Description
25D121	Oil Bar Console
25D130	Oil Bar Dispense Kit
25N415	Oil Bar Pulse Dispense Meter

Oil Bar
Components ordered separately. For complete unit, order console (25D121), dispense kit (25D130) (one per meter) and Pulse meters (25N415) as needed.

Accessories

Part Number	Description
249440	Console bracket

Pulse Pro Demo Kit

Pulse Pro demo case with everything needed to show customers how Pulse Pro will save them time, gain them more billable hours and maximize their fixed operation's profitability.

Part Number	Description
25D625	Includes Pulse Hub (24Z978), Pulse Dispense Meter, Pulse TLM (25M449), Pulse PAC (24Z728), Pulse Extender (17F885), Pulse Remote Extender (17F878), Pulse NFC Tag, case and protective foam

Pulse® FC is wire-free, so installation and configurations are easier and cheaper. We've replaced the big box console with fast, reliable and convenient fluid cards scanned at easy-to-handle meters, so users can employ the same type of familiar technologies they use elsewhere.

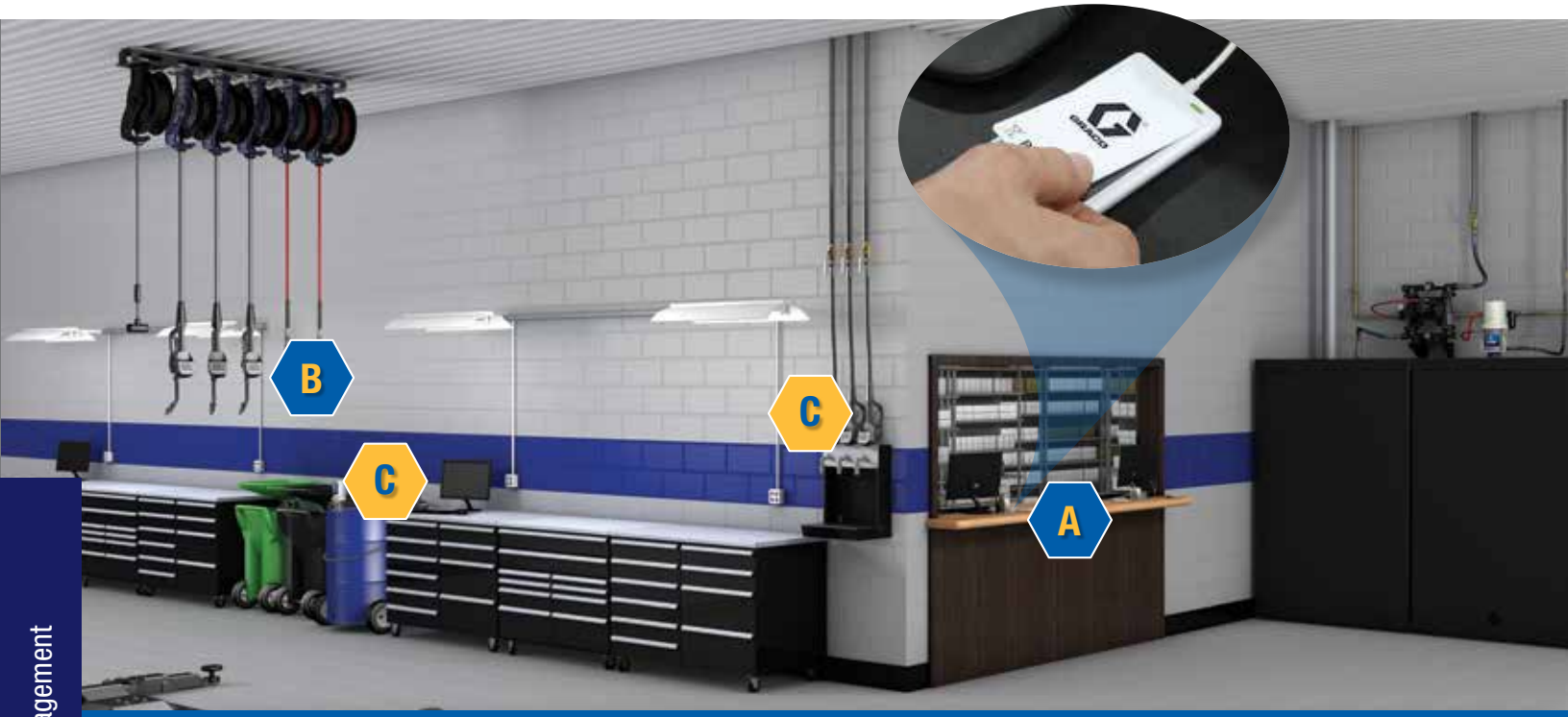

Steps to Build Your Pulse FC System:

A Starter Kit

1 REQUIRED

B Add SD™ Preset Meters

MINIMUM 1 REQUIRED

Add Accessories

C Oil Bar Dispenser

Roll Around Package

OPTIONAL

HOW IT WORKS

Pulse FC is a fluid control system that utilizes SD Preset meters. When put into Pulse FC mode, SD Preset meters will only dispense fluid when authorized with Fluid Cards. These included cards are programmed using the Pulse FC Software and Card Programmer. Once programmed, the cards are simply tapped to the meter which will be preset for the authorized amount of fluid and will not dispense any more than authorized.

PARTS ROOM/BACK OFFICE

1. Program fluid card with Pulse FC software and card programmer

5. Software indicates card has been returned and is ready to be reused

TECHNICIAN

2. Card passed to technician

4. Card is returned to parts room

WORKSHOP

3. Card tapped on any meter of correct fluid and meter is preset and restricted to the programmed quantity

GAIN INSIGHT INTO AND CONTROL OF YOUR BULK FLUIDS

Simplicity. Avoid surprises, interruptions and delays. Fluids are easily controlled so technicians can spend more time serving more customers.

Accountability. Be assured every vehicle or machine receives the appropriate amount of fluid for more accurate billing.

Scalability. Add Pulse FC into almost any environment quickly, even retrofit applications and avoid excessive installation costs and delays. You can also easily upgrade to Graco's Pulse Pro.

Mobility. Pair with mobile dispense units and drums quickly so your team can conveniently dispense without delays, hassles or extra steps.

Pulse FC Software

Pulse FC is a Windows PC-based software. Paired with the card programmer it allows setup and operation of the system. Cards can be utilized to authorize dispenses, totalize all fluids dispensed, as well as setup and calibrate SD™ Preset meters.

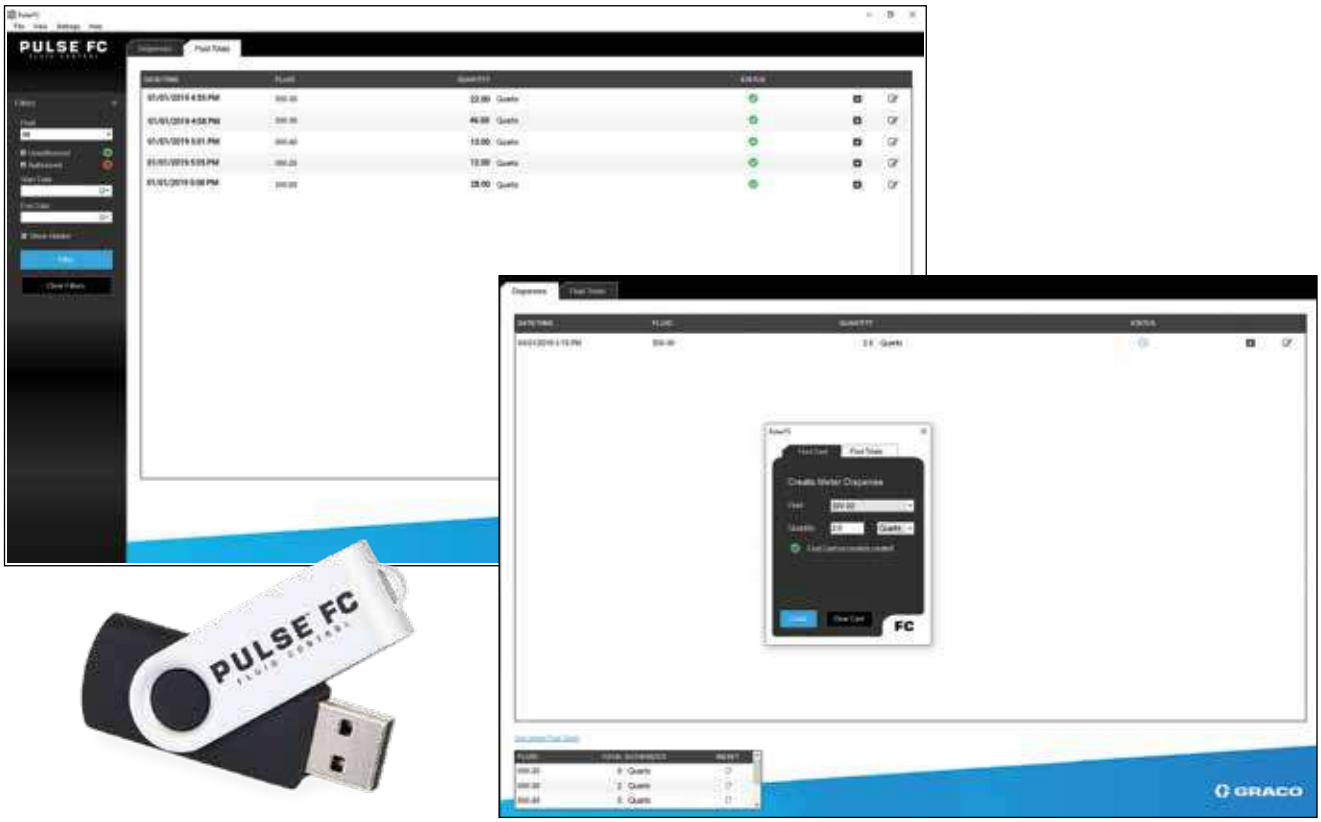

Oil | Gear Lube | Anti-Freeze | ATF

A Pulse FC Starter Kit

Enjoy an easy-to-use, easy-to-install, out-of-the-box fluid control system designed for fast wire-free setup and configuration. Pulse FC integrates into existing or new environments quickly and cost-effectively without interrupting daily operations.

Pulse FC Programmer

Easily program cards for dispense or fluid totals.

Pulse FC Fluid Cards

Reusable fluid cards can be scanned directly on the SD preset meter's built-in NFC reader.

Pulse FC Software

Simple PC-based software is used in conjunction with Pulse FC Programmer.

Pulse FC Software Quick Start

Easy-to-follow instructions for quick system setup.

A Ordering Information

Part Number	Description
26C401	Pulse FC Starter Kit – Includes Software, Card Programmer, Software Quick Start and 50-Pack of Fluid Cards

B

SD™ Preset Dispense Meters

Up to 18 gpm (68 lpm)

With Pulse FC, dispense only precise volumes to create efficiencies for your entire shop operation. Monitor how much fluid you're using. Choose the amount of fluid each technician can dispense in order to maintain accurate inventory.

Large LCD High-Contrast Display

High-contrast screen for reading in all lighting conditions with easy setup and navigation. See what fluid the meter is setup for and exactly how much you are dispensing.

Upgrade Option

Compatible with Pulse™ FC and upgradeable to Pulse™ Pro.

High Flow

Available in two models – 8 gpm (30 lpm) or 18 gpm (68 lpm).

Durable Cast Body

Designed for heavy duty and harsh applications.

Automatic Quick-Close Nozzle

Choose from rigid or flexible extensions with non-drip performance.

Long-Life Valve Design

Cartridge design for fewer and easier repairs.

Ergonomic Handle Design

Four-finger trigger and easy-to-use button pad reduce worker fatigue.

Fluid Management

Typical Applications

- Automotive dealerships
- Heavy-duty dealerships
- Fast lube centers
- Fleet service facilities
- Service shops
- In-plant
- Mining

Typical Fluids Handled

- Petroleum- and synthetic-based oils (motor gear, and ATF)
- Anti-freeze

Technical Specifications

Flow Range*	0.25 gpm to 18 gpm (0.9 lpm to 68 lpm)
Maximum Working Pressure	1,500 psi (103.4 bar)
Units of Measure	Pints, quarts, gallons, liters (factory set to quarts)
Metered Dispense Valve Accuracy**	+/- 0.5%
Inlet	1/2 in–14 NPT or 3/4 in–14 NPT
Outlet	3/4 in–16 straight thread O-ring Boss
Maximum Recorded Dispense	9999 units (factory set in quarts)
Operating Temperature Range	4°F to 158°F (-20°C to 70°C)
Storage Temperature Range	-40°F to 158°F (-40°C to 70°C)
Wetted Parts	Aluminum, stainless steel, PBT, nitrile rubber, zinc plated carbon steel, nickel plated carbon steel
Dimensions (without extension)	13 in L x 3.75 in W x 5.75 in H (33 cm x 9.5 cm x 14.6 cm)
Weight	5.3 lb (2.4 kg)
Warranty	Five years overall, three years electronics
Instruction Manual	3A6711 and 3A6673

*Tested in 10W motor oil. Flow rates vary with fluid pressure, temperature and viscosity.
**At 2.5 gpm (9.5 lpm), at 70°F (21°C), with 10-weight oil and 1 gallon dispensed. May require calibration.
***Battery required to meet life expectancy: Energizer® Alkaline E91.

Oil | Gear Lube | Anti-Freeze | ATF

B Ordering Information

SD™ Preset Electronic Meters

	Dispense Type	Flow Range gpm (lpm)	Fluid	Extension	Inlet in (NPT)	Part Number
SDP8	Preset (Pulse FC enabled)	0.25–8 (1–30)	Oil	Rigid	1/2	26C384
				Flexible	1/2	26C354
			Anti-freeze	Rigid	1/2	26C385
				Flexible	1/2	26C355
			Gear lube	Rigid	1/2	26C358
SDP18	Preset (Pulse FC enabled)	0.25–18 (1–68)	Oil	Rigid	1/2	26C356
				Flexible	1/2	26C357
				Rigid	3/4	26C360
				Flexible	3/4	26C361

Nozzle and Extension Kits

	Extension	Fluid	Nozzle Description	Part Number	Compatible Meters
	Rigid	Oil	Non-drip, quick-close	255852	SDP8
		Anti-freeze	Non-drip, manual open/close	26C267	SDP8
		Oil/Anti-freeze	High-flow, non-drip, quick-close	255857	SDP18
	Rigid	Gear lube	Non-drip, quick-close	255854	SDP8
	Flexible	Oil	Automatic, non-drip, quick-close	255853	SDP8
		Anti-freeze	Non-drip, manual open/close	26C268	SDP8
		Oil/Anti-freeze	High-flow, non-drip, quick-close	255858	SDP18
	Nozzle Only	Oil	Automatic, non-drip, quick-close	17R220	SDP8
	Nozzle Only	Gear lube	Non-drip, quick-close	255470	SDP8
	Nozzle Only	Oil/Anti-freeze	Non-drip, manual open/close	17T207	SDP8
	Flexible	Oil/Anti-freeze	Extension only, 2 ft length	131733	SDP8

C Ordering Information

Roll Around Package

Pulse FC wire-free technology allows you to control your mobile drums and dispenses by providing security for expensive drums of synthetic and semi-synthetic fluids. Each package contains everything you need to manage your drums in existing installations. Drum not included.

Package Number	Extensions	Package Includes					
		Meter	Pump	Downtube	Drum Cart	Air Regulator	Hose
26C366	8 GPM, Gear Lube	26C358	24G576	16F878	24F915	24H420	24H865
26C367	8 GPM, Flexible	26C354					
26C409	8 GPM, Rigid	26C384					

Oil Bar

Part Number	Description
25D121	Oil Bar Console
25D130	Oil Bar Dispense Kit
25N771	Oil Bar SD Preset Dispense Meter

Oil Bar
Components ordered separately. For complete unit, order console (25D121), dispense kit (25D130) (one per meter) and Pulse FC meters (25N771) as needed.

Accessories

Pulse FC Fluid Cards

Part Number	Description
130783	Pulse FC Fluid Cards – 50-Pack, White

Pulse FC Demo Kit

Part Number	Description
26C399	Includes Pulse FC Dispense Meter, Software, Card Programmer and 5-Pack of Fluid Cards

SD Meter Filter Kits

Part Number	Description
25D906	Filter kit includes filters/strainers (15M308) and O-rings (155332)

Swivel Covers / Impact Protection

	Part Number	Description
	15T366	Black swivel cover (standard color with meter)
	15T367	Red swivel cover
	15T368	Blue swivel cover
	15T369	Green swivel cover
	15T370	Yellow swivel cover
	131226	Pulse / SD meter boot

Hose Identification Wraps

Vinyl hose wrap for easy identification of meter fluid.

	Part Number	Description
	17S659	Red
	17S660	Blue
	17S661	Green
	17S662	Yellow
	17S663	White

Oil | Gear Lube | Anti-Freeze | ATF

Ordering Information

In-Line Meters

Part Number	Description
236763	Electronic pulse output meter (quarts)
236764	Electronic pulse output meter (liters)
215474	Mechanical pulse output meter (quarts)
244342	Meter pulse converter, used when upgrading old-style modular fluid commander to electronic allows use of 215474/215475 with the EFC.

Air Solenoid Valves

Part Number	Description
215407	Air solenoid valve, 150 psi (10 bar) (1/2 npsm (f) conduit ports for wiring; 1/4 in NPT(F) air ports, adapted to 3/8 (f) IN, 3/8 (m) OUT) operates on 24V DC and 110 VAC. Automatically shuts-off air inlet to pump when pre-set dispensed amount is reached. Materials of construction: brass, SST, Buna.
105474	Air solenoid valve (bare) 150 psi (10 bar), same as 215407 but without wire connectors or adapters. 1/2 in npsm (f) conduit ports for wiring; 1/4 in NPT(F) air ports.150 psi (10.3 bar) max. working pressure.

Fluid Solenoid Valves

Part Number	Description
215487	Fluid solenoid valve, 1/2 in NPT(F) 3,000 psi (207 bar) operates on 24V DC. Automatically shuts-off fluid when pre-set dispensed amount is reached. Includes tube, valve, pin connector, wire plug connector and adapter.
514150	Fluid solenoid valve for anti-freeze, 150 psi max. (10 bar), 1/2 in NPT(F), same as features as 215487.
110025	Bare fluid solenoid valve, 1/2 in NPT(F) 3,000 psi, same features as 215487 above, but without wiring connectors or adapters.

Ready-Light Kits

Part Number	Description
218588	Ready-light kit, signals operator when dispensing can begin. Includes “ready to dispense” indicator light (239019), strainer (240417), fluid solenoid valve (215487) and hardware.
238996	Ready-light with junction box (no solenoid or strainer)
239019	Ready-to-dispense indicator light only
113859	Lamp for indicator only

Installation Components

Part Number	Description
111620	Check valve
223179	Fluid filter kit (for bare electronic meter)
186472	Wall-mounting bracket
108458	Fluid shut-off valve
237893	Thermal relief kit for 900 psi (62 bar), relieves excess heat-induced pressure from dispense system. Male and female ends allow for simple installation.

Connecting Cables for Connecting Solenoids and Consoles, 90-volt, 2-wire, 18-gauge

Part Number	Description
215481	100 ft (30.5 m) pre-connected at both ends

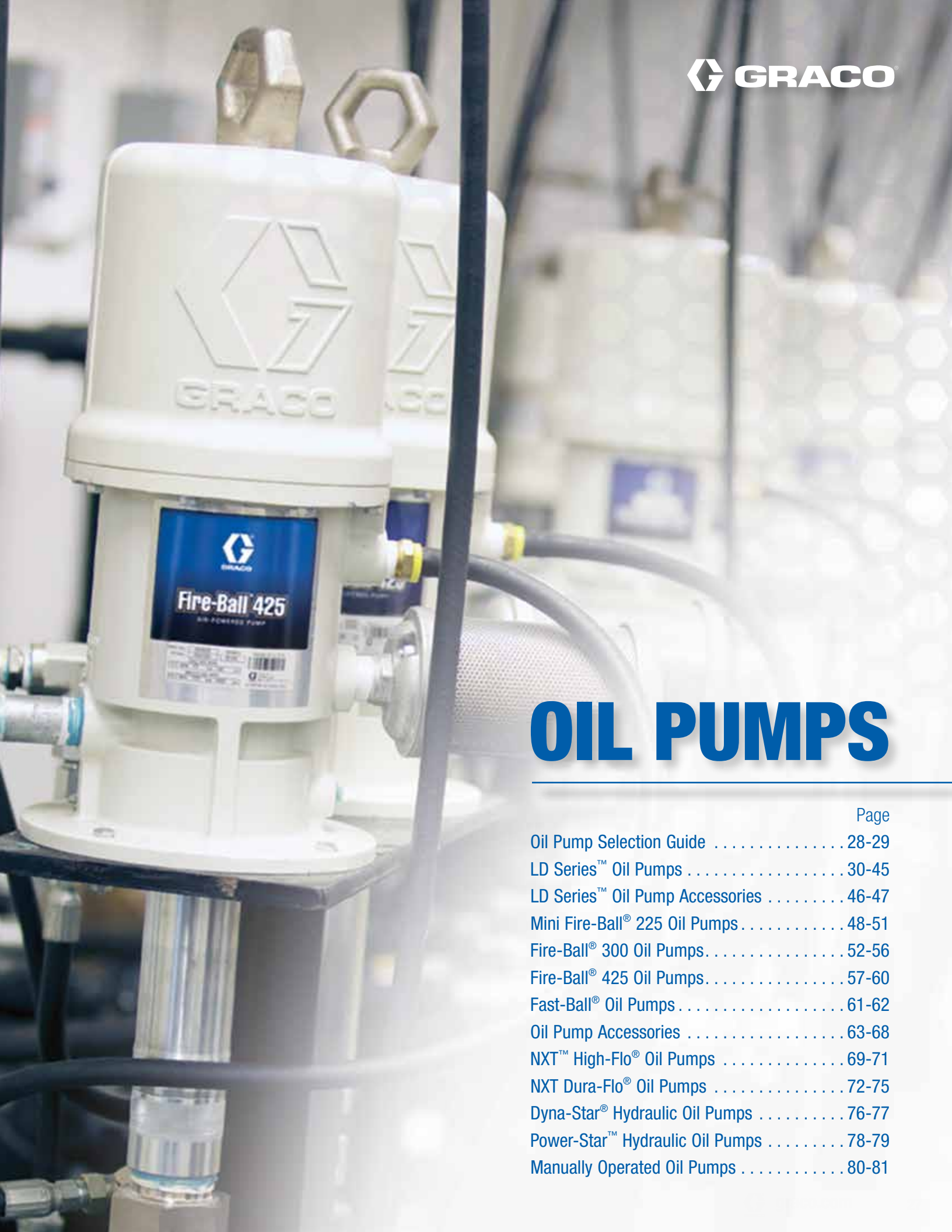

OIL PUMPS

	Page
Oil Pump Selection Guide	28-29
LD Series™ Oil Pumps	30-45
LD Series™ Oil Pump Accessories	46-47
Mini Fire-Ball® 225 Oil Pumps	48-51
Fire-Ball® 300 Oil Pumps	52-56
Fire-Ball® 425 Oil Pumps	57-60
Fast-Ball® Oil Pumps	61-62
Oil Pump Accessories	63-68
NXT™ High-Flo® Oil Pumps	69-71
NXT Dura-Flo® Oil Pumps	72-75
Dyna-Star® Hydraulic Oil Pumps	76-77
Power-Star™ Hydraulic Oil Pumps	78-79
Manually Operated Oil Pumps	80-81

Oil Pump Selection Guide

Pump Family and Fluid Pressure Ratio	Typical Applications	Annual Usage	Line Length	Simultaneous Dispense Points	Approx. Free Flow Rate @ 100 psi	Air Inlet	Fluid Inlet	Fluid Outlet	Air Operation Range	Reference Page
Fast-Ball, 1:1	• Automotive dealerships • Fast lube centers • Fleet service facilities • Heavy-duty dealerships • In-plant • Lube trucks • Lubricant transfer • Mining • Service shops	5,000 gal (19,00 l)	< 100 ft (30 m)	1 (no reels)	5 gpm (19 lpm)	1/4 NPT(F)	1-1/2 NPT(F)	3/4 NPT(F)	40-80 psi (2.7-12.5 bar)	62
LD, 3:1	• Automotive dealerships • Fast lube centers • Lube trucks • Lubricant transfer • Service shops	20,000 gal (75,000 l)	300 ft (91 m)	1 to 2	7.8 gpm (30 lpm)	1/4 NPT(F)	1 NPT(F)	1/2 NPT(F)	20-150 psi (1.37-10.3 bar)	30
LD, 5:1	• Automotive dealerships • Fast lube centers • Lube trucks • Lubricant transfer • Service shops	20,000 gal (75,000 l)	300 ft (91 m)	1 to 2	6.7 gpm (25 lpm)	1/4 NPT(F)	1 NPT(F)	1/2 NPT(F)	20-150 psi (1.37-10.3 bar)	30
Mini Fire-Ball 225, 3:1	• Automotive dealerships • Fast lube centers • Fleet service facilities • Heavy-duty dealerships • In-plant • Lube trucks • Lubricant transfer • Mining • Service shops	30,000 gal (113,500 l)	250 ft (76 m)	1 to 2	8.3 gpm (32 lpm)	3/8 NPT(F)	1-1/2 NPT(F)	1/2 NPT(F)	40-180 psi (2.8-12 bar)	48
Fire-Ball 300, 5:1	• Automotive dealerships • Fast lube centers • Fleet service facilities • Heavy-duty dealerships • In-plant • Lube trucks • Lubricant transfer • Mining • Service shops	35,000 gal (132,000 l)	500 ft (152 m)	1 to 3	12.1 gpm (46 lpm)	3/8 NPT(F)	1-1/2 NPT(F)	1/2 NPT(F)	40-180 psi (2.8-12 bar)	52
Fire-Ball 425, 3:1	• Automotive dealerships • Fast lube centers • Fleet service facilities • Heavy-duty dealerships • In-plant • Lube trucks • Lubricant transfer • Mining • Service shops	> 35,000 gal (132,000 l)	Up to 250 ft (76 m)	3 to 4	28.7 gpm (109 lpm)	1/2 NPT(F)	1-1/2 NPT(F)	3/4 NPT(F)	40-180 psi (2.8-12 bar)	57
Fire-Ball 425, 6:1	• Automotive dealerships • Fast lube centers • Fleet service facilities • Heavy-duty dealerships • In-plant • Lube trucks • Lubricant transfer • Mining • Service shops	> 35,000 gal (132,000 l	Up to 500 ft (152 m)	3 to 4	17.1 gpm (65 lpm)	1/2 NPT(F)	1-1/2 NPT(F)	3/4 NPT(F)	40-180 psi (2.8-12 bar)	57
Fire-Ball 425, 10:1	• Automotive dealerships • Fast lube centers • Fleet service facilities • Heavy-duty dealerships • In-plant • Lube trucks • Lubricant transfer • Mining • Service shops	> 35,000 gal (132,000 l	Up to 750 ft (228.6 m)	3 to 4	11.7 gpm (44 lpm)	1/2 NPT(F)	1-1/2 NPT(F)	3/4 NPT(F)	40-180 psi (2.8-12 bar)	57

Pump Family and Fluid Pressure Ratio	Typical Applications	Annual Usage	Line Length	Simultaneous Dispense Points	Air Inlet	Fluid Inlet	Fluid Outlet	Air Operation Range	Reference Page
NXT High Flo, 3.5:1	• Fleet service facilities • In-plant large runs • Large volume lubricant transfer • Mining remote fill	> 35,000 gal (132,000 l)	Up to 250 ft (76 m)	4 to 5	3/4 NPT(F)	1-1/2 NPT(F)	1 NPT(F)	20-100 psi (1.4-7 bar)	69
NXT High Flo, 4.5:1	• Fleet service facilities • In-plant large runs • Large volume lubricant transfer • Mining remote fill	> 35,000 gal (132,000 l)	Up to 450 ft (137 m)	4 to 5	3/4 NPT(F)	1-1/2 NPT(F)	1 NPT(F)	20-100 psi (1.4-7 bar)	69
NXT High Flo, 6:1	• Fleet service facilities • In-plant large runs • Large volume lubricant transfer • Mining remote fill	> 35,000 gal (132,000 l)	Up to 500 ft (152 m)	4 to 5	3/4 NPT(F)	2 NPT(F)	2 NPT(F)	20-75 psi (1.4-5.2 bar)	69
NXT Dura-Flo, 6:1	• Fleet service facilities • In-plant large runs • Large volume lubricant transfer • Mining remote fill	> 35,000 gal (132,000 l)	Up to 500 ft (152 m)	2 to 4	3/4 NPT(F)	2 NPT(F)	1-1/2 NPT(F)	20-100 psi (1.4-7 bar)	71
NXT Dura-Flo, 10:1	• Fleet service facilities • In-plant large runs • Large volume lubricant transfer • Mining remote fill	> 35,000 gal (132,000 l)	Up to 750 ft (228.6 m)	2 to 4	3/4 NPT(F)	2 NPT(F)	1-1/2 NPT(F)	20-100 psi (1.4-7 bar)	72
NXT Dura-Flo, 12:1	• Fleet service facilities • In-plant large runs • Large volume lubricant transfer • Mining remote fill	> 35,000 gal (132,000 l)	Up to 1000 ft (305 m)	2 to 4	3/4 NPT(F)	2 NPT(F)	1-1/2 NPT(M)	20-100 psi (1.4-7 bar)	72
NXT Dura-Flo, 23:1	• Fleet service facilities • In-plant large runs • Large volume lubricant transfer • Mining remote fill	> 35,000 gal (132,000 l)	Up to 1000 ft (305 m)	2 to 4	3/4 NPT(F)	2 NPT(F)	1-1/2 NPT(M)	20-75 psi (1.4-5.2 bar)	72

Pump Family and Fluid Pressure Ratio	Typical Applications	Maximum Output Flow Rate	Maximum Fluid Output Pressure	Hydraulic Inlet	Hydraulic Outlet	Fluid Inlet	Fluid Outlet	Maximum Hydraulic Inlet Pressure	Reference Page
Dyna-Star 1:1	• Fleet service facilities • Heavy-duty dealerships • In-plant • Lube trucks • Lubricant transfer • Mining • Service shops	3 gpm (11 lpm)	1500 psi (102 bar)	3/8 NPT(F)	3/4 NPT(F)	1-1/2 NPT(F)	1/2 NPT(F)	1500 psi (102 bar)	76
Dyna-Star 1/4:1	• Fleet service facilities • Heavy-duty dealerships • In-plant • Lube trucks • Lubricant transfer • Mining • Service shops	10 gpm (38 lpm)	375 psi (25.1 bar)	3/8 NPT(F)	3/4 NPT(F)	1-1/2 NPT(F)	1/2 NPT(F)	1500 psi (102 bar)	76
Power-Star 1:1	• Fleet service facilities • Heavy-duty dealerships • In-plant • Lube trucks • Lubricant transfer • Mining • Service shops	12 gpm (45 lpm)	1500 psi (102 bar)	3/4 NPT(F)	1-1/4 NPT(F)	1-1/2 NPT(F)	1/2 NPT(F)	1500 psi (102 bar)	78

Oil | Gear Lube | ATF

5 Year Warranty!

Durable and Hardworking

Stay ahead of the competition with LD Series pumps. These affordable and full-featured pumps are designed for lower-volume applications. LD pumps are fine-tuned for a compact, flexible and durable solution.

Three Inch Air Motor

Provides more power to create better flow.

Engineered for Durability

Patented cup and plate design eliminates the need for O-rings that wear out faster, for a more durable, longer-lasting solution.

Modular Air Valve

Air inlet and exhaust locations are easy to configure with just four bolts for simple, hassle-free installations.

Pilot Valves

Patented self-cleaning design increases reliability in dirty air environments and minimizes pressure drop with rapid changeovers for reduced stalling and smoother flow.

Built-In Thermal Relief and Inlet Strainer

Built-in thermal relief protects your equipment from thermal expansion, and an inlet strainer is built in to protect pump from contaminants.

Typical Applications

- Automotive dealerships
- Fast lube centers
- Service shops

Typical Fluids Handled

- Petroleum- and synthetic-based oils (motor, gear and ATF)

Pump Performance

LD Series 3:1 Pumps

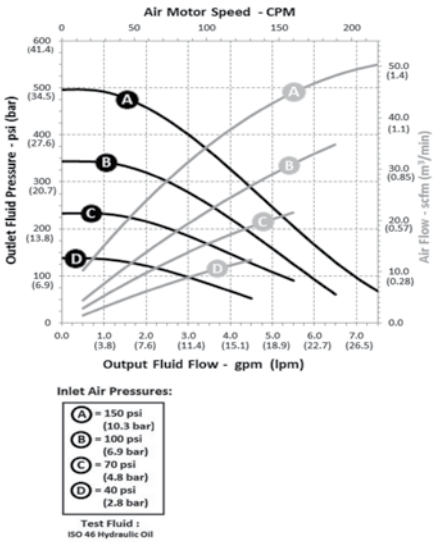

LD Series 5:1 Pumps

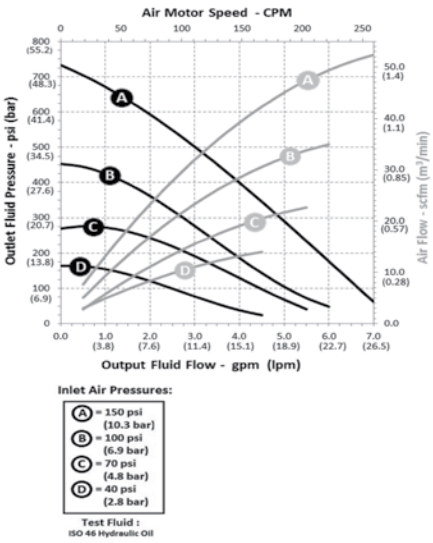

Technical Specifications

	LD Series 3:1	LD Series 5:1
Fluid Pressure Ratio	3:1	5:1
Air Motor Effective Diameter	3 in (76.2 mm)	3 in (76.2 mm)
Maximum Fluid Working Pressure	450 psi (31 bar / 3.1 MPa)	750 psi (51.7 bar / 5.17 MPa)
Approximate Free Flow Rate @ 100 psi	7.8 gal/min (30 liters/min)	6.7 gal/min (25 liters/min)
Output per Cycle	131 cc	102 cc
Approximate Air Use and Flow @ 100 psi (80 cpm)	18 scfm @ 2.8 gpm (0.51 m^3/min @ 10.6 lpm)	18 scfm @ 2.1 gpm (0.51 m^3/min @ 8.0 lpm)
Air Inlet	1/4 in	1/4 in
Fluid Inlet	1 in	1 in
Fluid Outlet	1/2 in	1/2 in
Air Operation Range	20 psi to 150 psi (1.37 bar to 10.3 bar)	20 psi to 150 psi (1.37 bar to 10.3 bar)
Maximum Recommended Pump Speed	120 cpm	180 cpm
Cycles per Gallon (liter)	29 (7.7)	37 (9.8)
Wetted Parts	Zinc plated carbon, steel, aluminum, nitrile, polyurethane, nickel plated aluminum	Zinc plated carbon, steel, aluminum, nitrile, polyurethane, nickel plated aluminum
Sound Pressure Level	72.9 dB(A)	72.9 dB(A)
Sound Power Level	82 dB(A)	82 dB(A)
Approximate Weight	7 lb (3.2 kg)	7.7 lb (3.5 kg)
Instruction Manual	3A1334	3A1334

Ordering Information

LD Series 3:1 Pumps

Part Number	Description
24G576	3:1 Universal oil pump with bung adapter (24F918)
24G579	3:1 Oil pump with cut-to-length PVC downtube (16F878) and bung adapter (24F918)
24G582	3:1 Oil pump with 55 gal (200 liter) downtube (16F886) and bung adapter (24F918)
24G585	3:1 Oil pump with 275 gal (1,040 liter) steel downtube (16F885) and bung adapter (24F918)

LD Series 5:1 Pumps

Part Number	Description
24G588	5:1 Universal oil pump with bung adapter (24F918)
24G591	5:1 Oil pump with cut-to-length PVC downtube (16F878) and bung adapter (24F918)
24G594	5:1 Oil pump with 55 gal (200 liter) steel downtube (16F886) and bung adapter (24F918)
24G597	5:1 Oil pump with 275 gal (1,040 liter) steel downtube (16F885) and bung adapter (24F918)

Oil | Gear Lube | ATF

Ordering Information

Mobile Oil Packages – Cart

Air regulator (part 24H420 – ordered separately) must be used for LD pump thermal relief function.

Package Number	24H751	24H750	24H753	24H752	24H775	24H774	24H777	24H776
Ratio	3:1	3:1	3:1	3:1	3:1	3:1	3:1	3:1
Pump Part Number	24G576	24G576	24G576	24G576	24G576	24G576	24G576	24G576
Suction Tube Size	200 L	200 L	200 L	200 L	200 L	200 L	200 L	200 L
Pump Downtube	16F886	16F886	16F886	16F886	16F886	16F886	16F886	16F886
Meter Type	Manual	Manual	Preset	Preset	Manual	Manual	Preset	Preset
Meter Part Number	25C903	25C904	256216	255277	25C903	25C904	256216	255277
Meter Extension	Rigid	Flexible	Rigid	Flexible	Rigid	Flexible	Rigid	Flexible
Hose Kit	24J495	24J495	24J495	24J495	24H865	24H865	24H865	24H865
Hose Reel Type	LD	LD	LD	LD	–	–	–	–
Hose Size	1/2 in x 35 ft	1/2 in x 35 ft	1/2 in x 35 ft	1/2 in x 35 ft	–	–	–	–
Hose Reel	24H662	24H662	24H662	24H662	–	–	–	–
55 gal Cart	24F915	24F915	24F915	24F915	24F915	24F915	24F915	24F915
Instruction Manual	3A1335	3A1335	3A1335	3A1335	3A1335	3A1335	3A1335	3A1335

Package 24H775 installed on a 55 gallon drum (not included in package).

Ordering Information

Mobile Oil Packages – Dolly

Air regulator (part 24H420 – ordered separately) must be used for LD pump thermal relief function.

Package Number	25C551	25C553	25C550	25C552
Ratio	3:1	3:1	3:1	3:1
Pump Part Number	24G576	24G576	24G576	24G576
Container Size	16 gal (120 lb)	16 gal (120 lb)	55 gal (400 lb)	55 gal (400 lb)
Pump Downtube	16F878	16F878	16F886	16F886
Meter Type	Manual	Preset	Manual	Preset
Meter Part Number	25C903	256216	25C903	256216
Meter Extension	Rigid	Rigid	Rigid	Rigid
Hose Kit	24H865	24H865	24H865	24H865
Portable Base	131184	131184	129645	129645
Instruction Manual	3A1335	3A1335	3A1335	3A1335

Oil | Gear Lube | ATF

Ordering Information

Wall Mount Oil Packages

Air regulator (part 24H420 – ordered separately) must be used for LD pump thermal relief function.

Package Number	24H689	24H695
Ratio	3:1	3:1
Pump Part Number	24G576	24G576
Suction Tube Size	55 gal drum	275 gal tote
Suction Hose Kit	24F935	24H666
Hose Kit	–	24H859
Wall Mount Bracket	24F910	24F910
Instruction Manual	3A1335	3A1335

Package 24H695 installed on a 275 gallon tote (not included in package).

Stationary Oil Packages

Air regulator (part 24H420 – ordered separately) must be used for LD pump thermal relief function.

Package Number	24H800	24H799	24H802	24H801
Ratio	3:1	3:1	3:1	3:1
Pump Part Number	24G576	24G576	24G576	24G576
Suction Tube Size	Universal	Universal	Universal	Universal
Pump Downtube	16F878	16F878	16F878	16F878
Meter Type	Manual	Manual	Preset	Preset
Meter Part Number	25C903	25C904	256216	255277
Meter Extension	Rigid	Flexible	Rigid	Flexible
Hose Kit	24H859	24H859	24H859	24H859
Instruction Manual	3A1335	3A1335	3A1335	3A1335

Ordering Information

Stationary Oil Packages – Tote

Standard packages include LD Series hose reel. Air regulator (part 24H420 – ordered separately) must be used for LD pump thermal relief function.

Package Number	24H702	24H704	24H726	24H728
Ratio	3:1	3:1	3:1	3:1
Pump Part Number	24G576	24G576	24G576	24G576
Suction Tube Size	275 gal (1,040 l)	275 gal (1,040 l)	275 gal (1,040 l)	275 gal (1,040 l)
Pump Downtube	16F885	16F885	24H669	24H669
Mounting Position	Top	Top	Drain	Drain
Reel Type	LD	LD	LD	LD
Hose Reel Part Number	24H662	24H662	24H662	24H662
Hose Size	1/2 in x 35 ft	1/2 in x 35 ft	1/2 in x 35 ft	1/2 in x 35 ft
LD Reel Bracket Kit	24F932	24F932	24F932	24F932
Meter Type	Manual	Preset	Manual	Preset
Meter Part Number	25C903	256216	25C903	256216
Meter Extension	Rigid	Rigid	Rigid	Rigid
Hose Kit	6 ft x 3/8 in air hose / 6 ft x 1/2 in fluid hose	6 ft x 3/8 in air hose / 6 ft x 1/2 in fluid hose	6 ft x 3/8 in air hose / 6 ft x 1/2 in fluid hose	6 ft x 3/8 in air hose / 6 ft x 1/2 in fluid hose
Hose Kit Part Number	24J495	24J495	24J495	24J495
Top Mount Tote Bracket	24F930	24F930	24F931	24F931
Tote Mount Pump Bracket	–	–	24F920	24F920
Meter Tray	24F914	24F914	24F914	24F914
Instruction Manual	3A1335	3A1335	3A1335	3A1335

Package 24H728 installed on a 275 gallon tote (not included in package).

Oil Gear Lube ATF

Ordering Information

Deluxe Stationary Oil Packages – Tote

Deluxe packages include SD Series hose reel. Air regulator (part 24H420 – ordered separately) must be used for LD pump thermal relief function.

Package Number	24K838	24K842
Ratio	3:1	3:1
Pump Part Number	24G576	24G576
Suction Tube Length	275 gal (1,040 l)	275 gal (1,040 l)
Pump Downtube	16F885	16F885
Reel Type	SD	SD
Hose Reel Part Number	HPM65B	HPM65B
Meter Type	Preset	Manual
Meter Part Number	256216	25C904
Meter Extension	Rigid	Flexible
Hoses and Fittings	24J495	24J495
Top Mount Tote Bracket	24F930	24F930
SD Reel/IBC Tote Bracket	24K285	24K285
Meter Tray	24F914	24F914
Instruction Manual	3A1335	3A1335

Ordering Information

Tank Mount Oil Packages

Air regulator (part 24H420 – ordered separately) must be used for LD pump thermal relief function.

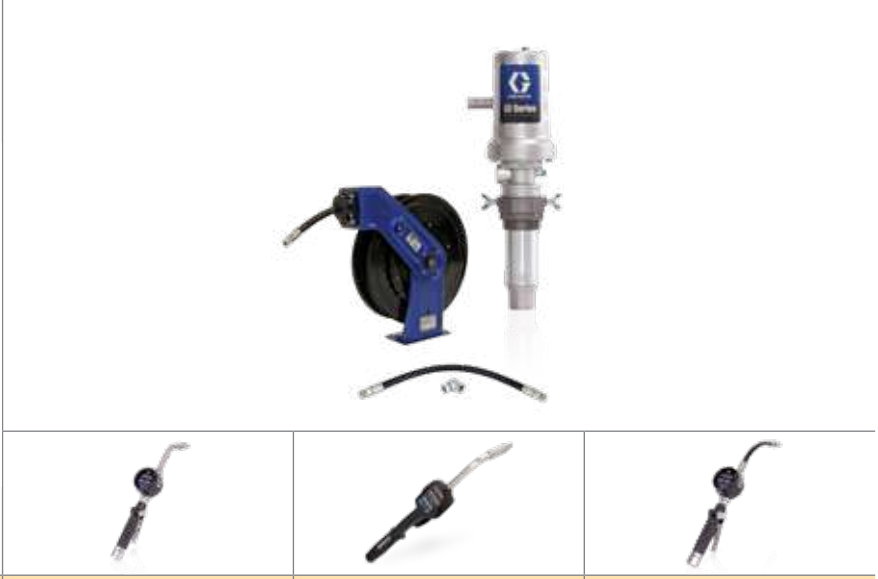

Package Number	24J776	24J733	24J734	24K836
Ratio	3:1	3:1	3:1	3:1
Pump Part Number	24G576	24G576	24G576	24G576
Hose Reel Type	LD	SD	SD	SD
Hose Reel	24H662	HPM65B	HPM65B	HPM65B
Meter Type	Manual	Manual	Preset	Manual
Meter Part Number	25C903	25C903	256216	25C904
Meter Extension	Rigid	Rigid	Rigid	Flexible
Inlet Kit	24C538	218549	218549	218549
Mounting Bracket	24C772	–	–	–
Instruction Manual	3A1335	3A1335	3A1335	3A1335

Oil Gear Lube ATF

Ordering Information

Deluxe Tank Mount Oil Packages

Deluxe packages include SD hose reel, air and fluid hoses with fittings, and mini air regulator.

Package Number	24K777	24K797	24K799	24K834
Ratio	3:1	3:1	3:1	3:1
Pump Part Number	24G576	24G576	24G576	24G576
Hose Reel Type	SD	SD	SD	SD
Hose Size	1/2 in x 50 ft	1/2 in x 50 ft	1/2 in x 50 ft	1/2 in x 35 ft
Hose Reel	HPM65B	HPM65B	HPM65B	HPM33B
Meter Type	Preset	Manual	Manual	Manual
Meter Part Number	256216	25C903	25C904	25C903
Meter Extension	Rigid	Rigid	Flexible	Rigid
Air and Fluid Hoses with Fittings	24J495	24J495	24J495	24J495
Mini Air Regulator with Gauge	24H420	24H420	24H420	24H420
Instruction Manual	3A1335	3A1335	3A1335	3A1335

Ordering Information

Mobile Oil Packages – Cart

Air regulator (part 24H420 – ordered separately) must be used for LD pump thermal relief function.

Package Number	24H916	24H915	24H918	24H917	24H941	24H940	24H943	24H942
Ratio	5:1	5:1	5:1	5:1	5:1	5:1	5:1	5:1
Pump Part Number	24G588	24G588	24G588	24G588	24G588	24G588	24G588	24G588
Suction Tube Size	200 L	200 L	200 L	200 L	200 L	200 L	200 L	200 L
Pump Downtube	16F886	16F886	16F886	16F886	16F886	16F886	16F886	16F886
Meter Type	Manual	Manual	Preset	Preset	Manual	Manual	Preset	Preset
Meter Part Number	25C903	25C904	256216	255277	25C903	25C904	256216	255277
Meter Extension	Rigid	Flexible	Rigid	Flexible	Rigid	Flexible	Rigid	Flexible
Hose Kit	24J495	24J495	24J495	24J495	24H865	24H865	24H865	24H865
Hose Reel Type	LD	LD	LD	LD	–	–	–	–
Hose Size	1/2 in x 35 ft	1/2 in x 35 ft	1/2 in x 35 ft	1/2 in x 35 ft	–	–	–	–
Hose Reel	24H662	24H662	24H662	24H662	–	–	–	–
55 gal Cart	24F915	24F915	24F915	24F915	24F915	24F915	24F915	24F915
Instruction Manual	3A1335	3A1335	3A1335	3A1335	3A1335	3A1335	3A1335	3A1335

Package 24H941 installed on a 55 gallon drum (not included in package).

Oil Gear Lube ATF

Ordering Information

Mobile Oil Packages – Dolly

Air regulator (part 24H420 – ordered separately) must be used for LD pump thermal relief function.

Package Number	25C555	25C557	25C554	25C556
Ratio	5:1	5:1	5:1	5:1
Pump Part Number	24G588	24G588	24G588	24G588
Container Size	16 gal (120 lb)	16 gal (120 lb)	55 gal (400 lb)	55 gal (400 lb)
Pump Downtube	16F878	16F878	16F886	16F886
Meter Type	Manual	Preset	Manual	Preset
Meter Part Number	25C903	256216	25C903	256216
Meter Extension	Rigid	Rigid	Rigid	Rigid
Hose Kit	24H865	24H865	24H865	24H865
Portable Base	131184	131184	129645	129645
Instruction Manual	3A1335	3A1335	3A1335	3A1335

Ordering Information

Wall Mount Oil Packages

Air regulator (part 24H420 – ordered separately) must be used for LD pump thermal relief function.

Package Number	24H836	24H842
Ratio	5:1	5:1
Pump Part Number	24G588	24G588
Suction Tube Size	55 gal drum	275 gal tote
Suction Hose Kit	24F935	24H666
Hose Kit	–	24H859
Wall Mount Bracket	24F910	24F910
Instruction Manual	3A1335	3A1335

Package 24H842 installed on a 275 gallon tote (not included in package).

Stationary Oil Packages

Air regulator (part 24H420 – ordered separately) must be used for LD pump thermal relief function.

Package Number	24H965	24H964	24H967	24H966
Ratio	5:1	5:1	5:1	5:1
Pump Part Number	24G588	24G588	24G588	24G588
Suction Tube Size	Universal	Universal	Universal	Universal
Pump Downtube	16F878	16F878	16F878	16F878
Meter Type	Manual	Manual	Preset	Preset
Meter Part Number	25C903	25C904	256216	255277
Meter Extension	Rigid	Flexible	Rigid	Flexible
Hose Kit	24H859	24H859	24H859	24H859
Instruction Manual	3A1335	3A1335	3A1335	3A1335

Oil | Gear Lube | ATF

Ordering Information

Stationary Oil Packages – Tote

Standard packages include LD Series hose reel. Air regulator (part 24H420 – ordered separately) must be used for LD pump thermal relief function.

Package Number	24H868	24H870	24H892	24H894
Ratio	5:1	5:1	5:1	5:1
Pump Part Number	24G588	24G588	24G588	24G588
Suction Tube Size	275 gal (1,040 l)	275 gal (1,040 l)	275 gal (1,040 l)	275 gal (1,040 l)
Pump Downtube	16F885	16F885	24H669	24H669
Mounting Position	Top	Top	Drain	Drain
Reel Type	LD	LD	LD	LD
Hose Reel Part Number	24H662	24H662	24H662	24H662
Hose Size	1/2 in x 35 ft	1/2 in x 35 ft	1/2 in x 35 ft	1/2 in x 35 ft
LD Reel Bracket Kit	24F932	24F932	24F932	24F932
Meter Type	Manual	Preset	Manual	Preset
Meter Part Number	25C903	256216	25C903	256216
Meter Extension	Rigid	Rigid	Rigid	Rigid
Hose Kit	6 ft x 3/8 in air hose / 6 ft x 1/2 in fluid hose	6 ft x 3/8 in air hose / 6 ft x 1/2 in fluid hose	6 ft x 3/8 in air hose / 6 ft x 1/2 in fluid hose	6 ft x 3/8 in air hose / 6 ft x 1/2 in fluid hose
Hose Kit Part Number	24J495	24J495	24J495	24J495
Top Mount Tote Bracket	24F930	24F930	24F931	24F931
Tote Mount Pump Bracket	–	–	24F920	24F920
Meter Tray	24F914	24F914	24F914	24F914
Instruction Manual	3A1335	3A1335	3A1335	3A1335

Package 24H894 installed on a 275 gallon tote (not included in package).

Ordering Information

Deluxe Stationary Oil Packages – Tote

Deluxe packages include SD Series hose reel. Air regulator (part 24H420 – ordered separately) must be used for LD pump thermal relief function.

Package Number	24K839	24K843
Ratio	5:1	5:1
Pump Part Number	24G588	24G588
Suction Tube Length	275 gal (1,040 l)	275 gal (1,040 l)
Pump Downtube	16F885	16F885
Reel Type	SD	SD
Hose Reel Part Number	HPM65B	HPM65B
Hose Reel Bracket	24K285	24K285
Meter Type	Preset	Manual
Meter Part Number	256216	25C904
Meter Extension	Rigid	Flexible
Hoses and Fittings	24J495	24J495
Top Mount Tote Bracket	24F930	24F930
Meter Tray	24F914	24F914
Instruction Manual	3A1335	3A1335

Oil Gear Lube ATF

Ordering Information

Oil Packages – Tank Mount

Air regulator (part 24H420 – ordered separately) must be used for LD pump thermal relief function.

Package Number	24J777	24J735	24J736	24K837
Ratio	5:1	5:1	5:1	5:1
Pump Part Number	24G588	24G588	24G588	24G588
Reel Type	LD	SD	SD	SD
Hose Reel Part Number	24H662	HPM65B	HPM65B	HPM65B
Meter Type	Manual	Manual	Preset	Manual
Meter Part Number	25C903	25C903	256216	25C904
Meter Extension	Rigid	Rigid	Rigid	Flexible
Inlet Kit	24C538	218549	218549	218549
Mounting Bracket	24C772	–	–	–
Instruction Manual	3A1335	3A1335	3A1335	3A1335

Ordering Information

Deluxe Oil Packages – Tank Mount

Deluxe packages include SD hose reel, air and fluid hoses with fittings, and mini air regulator.

Package Number	24K796	24K798	24K800	24K835
Ratio	5:1	5:1	5:1	5:1
Pump Part Number	24G588	24G588	24G588	24G588
Reel Type	SD	SD	SD	SD
Hose Size	1/2 in x 50 ft (12.7 mm x 15 m)	1/2 in x 50 ft (12.7 mm x 15 m)	1/2 in x 50 ft (12.7 mm x 15 m)	1/2 in x 35 ft (12.7 mm x 10.6 m)
Hose Reel Part Number	HPM65B	HPM65B	HPM65B	HPM33B
Meter Type	Preset	Manual	Manual	Manual
Meter Part Number	256216	25C903	25C904	25C903
Meter Extension	Rigid	Rigid	Flexible	Rigid
Air and Fluid Hoses with Fittings	24J495	24J495	24J495	24J495
Mini Air Regulator with Gauge	24H420	24H420	24H420	24H420
Instruction Manual	3A1335	3A1335	3A1335	3A1335

Oil | Gear Lube | ATF

Ordering Information

Air Regulators

Part Number	Description
24H420	Mini air pressure regulator with gauge, 1/4 in NPT x 3/8 in NPT, self-relieving

Carts

Part Number	Description
24F915	Drum cart with pneumatic wheels for 55 gallon drums, includes chain for securing drum to cart

LD Drum Dollies

Part Number	Description
131183	Drum dolly for 35 lb (16 kg) drum
131184	Drum dolly for 120 lb (54 kg) drum
129645	Drum dolly for 400 lb (182 kg) drum

Downtubes

Part Number	Description
16F878	Universal cut to length PVC downtube
16F886	Drum length steel downtube
16F885	Tote length steel downtube

Drum Covers

Part Number	Description
24F904	Cover for 35 lb (16 kg) pails
24F905	Cover for open-head 120 lb drums
24F906	Cover for open-head 400 lb drums

Hose and Fitting Kits

Part Number	Description	Kit Includes			
		Fluid Hose	Air Hose	Swivel	Union Fitting
24H865	15 ft LD pump fluid hose kit	1/2 in x 15 ft	3/8 in x 6 ft	157705	156684
24H859	6 ft LD pump fluid hose kit	1/2 in x 6 ft	3/8 in x 6 ft	157705	156684

Suction Kits

Part Number	Description
24F935	LD oil pump suction hose kit for 55 gal (200 L) drum. Includes 55 gal (200 L) drum length metal downtube, bung adapter, foot valve and 6 ft of 1 in suction hose
24H666	LD oil pump suction hose kit for 275 gal (1,040 L) drum. Includes 275 gal (1,040 L) tote length metal downtube, bung adapter, foot valve and 6 ft of 1 in suction hose
24H669	LD oil pump suction hose kit and adapter for mounting pump to the side of IBC tote and dispensing from drain. Includes 1 in x 3 ft suction hose, 1 in elbow fitting and union fitting (160022)

Ordering Information

Mounting Hardware

	Part Number	Description
	24F910	LD Series pump wall mounting bracket
	24F918	Bung adapter

Tote Mount Accessories

	Part Number	Description
	24F914	Meter drip tray for mounting to the side of IBC tote
	24F932	LD Series reel bracket for mounting reel to IBC top mount tote bracket (24F930 and 24F920)
	24F931	Tote mounting bracket to mount reel on top of IBC tote (pump mounting bracket is not included)
	24F930	Top of tote mounting bracket. For mounting LD Series pump in top of IBC tote.
	24F920	Bracket for mounting LD Series pump on the side of IBC tote
	24K285	Bracket for mounting SD Series hose reel to IBC tote mounting bracket 24F930 (24F930 bracket sold separately)

Oil | Gear Lube | ATF

7 Year Warranty!

Perfect for Medium Pressure, Low-Volume Applications

You can't afford downtime, especially when your shop is small. The Mini Fire-Ball 225 is designed with fewer moving parts, which means less wear and tear and reduced downtime, allowing you to run a more profitable business.

Durable Casting

Thick cast aluminum air motor housing offers unmatched durability.

Fewer Repairs

Fewer moving parts in the air motor assembly means less downtime and low repair cost.

Extended Seal Life

In-line pump design aligns the air motor piston and fluid piston rods to maximize seal life.

Superior Sealing

Non-metallic poppet valves offer positive sealing performance, even with contaminated "dirty" air environments for long life without repair.

Corrosion-Resistant

Corrosion-resistant design utilizes liquid salt nitriding, nickel plating, stainless steel, aluminum and chrome on key components for longer life.

Typical Applications

- Automotive dealerships
- Fast lube centers
- Service shops
- Heavy-duty dealerships
- Fleet services facilities
- In-plant
- Lube trucks
- Mining

Typical Fluids Handled

- Petroleum- and synthetic-based oils (motor, gear and ATF)

Pump Performance

Mini Fire-Ball 225 3:1 Pumps

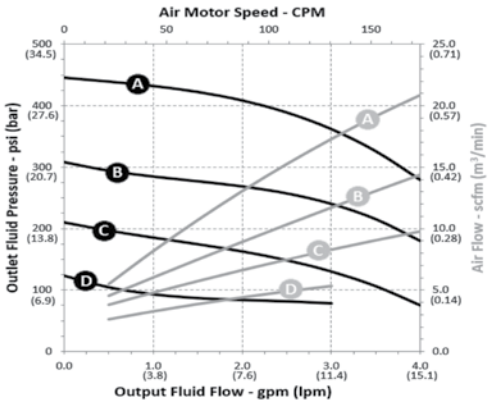

Inlet Air Pressures:
- (A) = 150 psi (10.3 bar)
- (B) = 100 psi (6.9 bar)
- (C) = 70 psi (4.8 bar)
- (D) = 40 psi (2.8 bar)

Test Fluid : No. 10 Weight Oil

Technical Specifications

Fluid Pressure Ratio	3:1
Air Motor Effective Diameter	2.25 in (57.2 mm)
Maximum Fluid Working Pressure	540 psi (37 bar / 3.7 MPa)
Approximate Free Flow Rate @ 100 psi	8.3 gal/min (32 liters/min)
Output per Cycle	87 cc
Approximate Air Use and Flow @ 100 psi (80 cpm)	9 scfm @ 1.9 gpm (0.25 m^3/min @ 7.2 lpm)
Air Inlet	3/8 in NPT(F)
Fluid Inlet	1-1/2 in NPT(F)
Fluid Outlet	1/2 in NPT(F)
Air Operation Range	40 psi to 180 psi (2.8 bar to 12 bar)
Maximum Recommended Pump Speed	100 cpm
Cycles per Gallon (Liter)	43.5 (11.5)
Wetted Parts	Steel, Buna-N, polyurethane, aluminum, Rulon®
Sound Pressure Level	77.8 dB(A)
Sound Power Level	85.6 dB(A)
Approximate Weight	16 lb (7.3 kg)
Instruction Manual	309868

Ordering Information

Mini Fire-Ball 225 3:1 Pumps

Part Number	Description
246775	3:1 Universal oil pump
248097	3:1 Universal oil pump with suction tube (15C502) and bung adapter (222308)

Mini Fire-Ball 225 3:1 Oil Pump Packages

Oil | Gear Lube | ATF

Ordering Information

Oil Packages

Package Number	246903*	246904*	246906*	246907**	248230**
Ratio	3:1	3:1	3:1	3:1	3:1
Package Type	Portable	Cover-mounted	Cover-mounted	Bung-mounted	Bung-mounted
Maximum Container Size	16 gal (60 l)	16 gal (60 l)	55 gal (200 l)	55 gal (200 l)	275 gal (1,040 l)
Pump	248097	248097	248097	248097	246775
Meter Type	Manual	–	–	–	–
Meter Part Number	25M413	–	–	–	–
Meter Extension	Rigid	–	–	–	–
Dispense/ Hose Fitting Kit	237075	222063	222063	222063	222062
Fluid Hose Size	1/2 in x 6 ft (12.7 mm x 1.8 m)	1/2 in x 6 ft (12.7 mm x 1.8 m)	1/2 in x 6 ft (12.7 mm x 1.8 m)	1/2 in x 6 ft (12.7 mm x 1.8 m)	1/2 in x 1.5 ft (12.7 mm x 0.46 m)
Air Hose Size	–	3/8 in x 6 ft (9.5 mm x 1.8 m)	3/8 in x 6 ft (9.5 mm x 1.8 m)	3/8 in x 6 ft (9.5 mm x 1.8 m)	3/8 in x 1.5 ft (9.5 mm x 0.46 m)
Air Regulator	224512	224512	224512	–	–
Pump Shim	17C270	17C270	17C270	–	–
Cover	24R350	24R350	200326	–	–
Caster Base	203622	–	–	–	–
Instruction Manual	307884	307883	307883	307883	309868

*Order low-level shut-off (203688) (1-1/2 in NPT) separately for metered dispense systems.
**Order low-level shut-off (203688) (1-1/2 in NPT) separately for metered dispense systems. Use 3/8 in (9.5 mm) air regulator (109075) as required; must be ordered separately.

Mini Fire-Ball 225 3:1 Oil Pump Packages

Ordering Information

Bulk Oil Dispensing Packages

Package Number	248623*	248622*	24F205	24F206
Ratio	3:1	3:1	3:1	3:1
Pump	248097	248097	246775	246775
Bung Adapter	–	–	222308	222308
Reel Size	1/2 in x 50 ft (12.7 mm x 15.2 m)	1/2 in x 35 ft (12.7 mm x 11 m)	1/2 in x 50 ft (12.7 mm x 15.2 m)	1/2 in x 50 ft (12.7 mm x 15.2 m)
Reel Type	SD	SD	SD	SD
Hose Reel	HPM65B	HPM33B	HPM65B	HPM65B
Meter Type	LD	LD	Mechanical	LD
Manual/Preset	Manual	Manual	Manual	Manual
Meter	25C903	25C903	24V034	25C903
Installation Kit	–	–	222062	222062
Air Regulator	–	–	109075	109075
Instruction Manual	309868, 312668, 313431	309868, 312668, 313431	309868, 313431	309868, 313431

*Order (218549) (1/2 in x 24 in) hose kit separately.

Oil | Gear Lube | ATF

7 Year Warranty!

Ideal for Medium-Sized Shops with High-Pressure Oil Transfer

Install the Fire-Ball 300 in high-pressure, medium-volume oil dispense applications such as automotive dealerships, fast lube centers and service shops. A three inch differential air motor ensures smooth pumping, and the smooth double-acting pump design provides reliable fluid flow and accurate dispense.

Durable Casting

Thick cast aluminum air motor housing offers unmatched durability.

Fewer Repairs

Fewer moving parts in the air motor assembly means less downtime and low repair cost.

Superior Sealing

Non-metallic poppet valves offer positive sealing performance, even with contaminated "dirty" air environments for long life without repair.

Extended Seal Life

In-line pump design aligns the air motor piston and fluid piston rods to maximize seal life.

Corrosion-Resistant

Corrosion-resistant design utilizes liquid nitriding, nickel plating, stainless steel, aluminum and chrome on key components for longer life.

Typical Applications

- Automotive dealerships
- Fast lube centers
- Service shops
- Heavy-duty dealerships
- Fleet services facilities
- In-plant
- Lube trucks
- Mining

Typical Fluids Handled

- Petroleum- and synthetic-based oils (motor, gear and ATF)

Pump Performance

Fire-Ball 300 5:1 Pumps

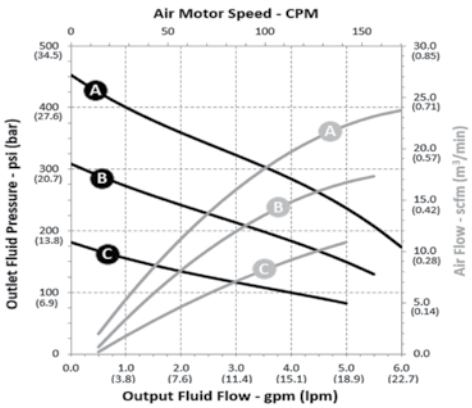

Inlet Air Pressures:

- A = 100 psi (6.9 bar)
- B = 70 psi (4.8 bar)
- C = 40 psi (2.8 bar)

Test Fluid : ISO 46 Oil

Technical Specifications

Fluid Pressure Ratio	5:1
Air Motor Effective Diameter	3 in (76.2 mm)
Maximum Fluid Working Pressure	900 psi (62 bar / 6.2 MPa)
Approximate Free Flow Rate @ 100 psi	12.1 gal/min (46 liters/min)
Output per Cycle	133 cc
Approximate Air Use and Flow @ 100 psi (80 cpm)	16 scfm @ 2.8 gpm (0.45 m^3/min @ 10.6 lpm)
Air Inlet	3/8 in NPT(F)
Fluid Inlet	1-1/2 in NPT(F)
Fluid Outlet	1/2 in NPT(F)
Air Operation Range	40 psi to 180 psi (2.8 bar to 12 bar)
Maximum Recommended Pump Speed	70 cpm
Cycles per Gallon (Liter)	28.4 (7.5)
Wetted Parts	Steel, polyurethane, aluminum, Buna-N
Sound Pressure Level	77.8 dB(A)
Sound Power Level	85.6 dB(A)
Approximate Weight	17 lb (7.7 kg)
Instruction Manual	306518

Ordering Information

Fire-Ball 300 5:1 Pumps

Part Number	Description
203876	5:1 Universal oil pump
203872	5:1 Oil pump, 16 gal (120 lb) drum size, for cover mount
203857	5:1 Oil pump, 55 gal (400 lb) drum size, for cover mount
204254	5:1 Oil pump, 55 gal (400 lb) drum size, bung mount
222087	5:1 Oil pump, 275 gal (1,040 lb) tank size, bung mount

Fire-Ball 300 5:1 Oil Pump Packages

Oil | Gear Lube | ATF

Ordering Information

Oil Pump Packages

Package Number	225728*	225094**	225642**	225640**	225931**	225852**
Ratio	5:1	5:1	5:1	5:1	5:1	5:1
Package Type	Portable	Cover-mounted	Cover-mounted	Bung-mounted	Bung-mounted	Universal
Maximum Container Size	16 gal (60 l)	16 gal (60 l)	55 gal (200 l)	55 gal (200 l)	275 gal (1,040 l)	Universal
Pump	203872	203872	203857	204254	222087	203876
Meter Type	Manual	–	–	–	–	
Meter Part Number	25M413	–	–	–	–	
Meter Extension	Rigid	–	–	–	–	
Dispense/ Hose Fitting Kit	237075	222063	222063	222063	222063	222062
Fluid Hose Size	1/2 in x 6 ft (12.7 mm x 1.8 m)	1/2 in x 6 ft (12.7 mm x 1.8 m)	1/2 in x 6 ft (12.7 mm x 1.8 m)	1/2 in x 6 ft (12.7 mm x 1.8 m)	1/2 in x 6 ft (12.7 mm x 1.8 m)	1/2 in x 1.5 ft (12.7 mm x 0.46 m)
Air Hose Size	–	3/8 in x 6 ft (9.5 mm x 1.8 m)	3/8 in x 6 ft (9.5 mm x 1.8 m)	3/8 in x 6 ft (9.5 mm x 1.8 m)	3/8 in x 6 ft (9.5 mm x 1.8 m)	3/8 in x 1.5 ft (9.5 mm x x 0.46 m)
Air Regulator	224512	224512	224512	–	–	–
Cover	24R350	24R350	200326	–	–	–
Caster Base	203622	–	–	–	–	–
Bung Adapter	–	–	–	222308	222308	–
Instruction Manual	307884	307883	307883	307883	307883	306520

*Order low-level cut-off (203688) (1-1/2 in NPT) separately for metered dispense systems. Use 3/8 in (9.5 mm) installation kit (224512) as required.
**Order low-level cut- off (203688) (1-1/2 in NPT) separately for metered dispense systems. Use 3/8 in (9.5 mm) air regulator (109075) as required; must be ordered separately.

Ordering Information

Bulk Oil Dispensing Packages

Package Number	241633*	224541*	244038*	224534*
Ratio	5:1	5:1	5:1	5:1
Dispensing Location	–	–	–	Bench/Top Tank
Pump	203876	203876	203876	203876
Regulator/Gauge	109075	109075	109075	109075
Nipple	156849	156849	156849	156849
Bung Adapter	222308	222308	222308	222308
Reel Size	1/2 in x 35 ft	1/2 in x 50 ft	1/2 in x 50 ft	1/2 in x 50 ft
Reel Type	SD	SD	SD	SD
Hose Reel	HPM33B	HPM65B	HPM65B	HPM65B
Type of Meter	SD	SD	SD	SD
Manual/Preset	Manual	Manual	Preset	Manual
Meter	25M404	25M404	26C384	25M404
90° Swivel	–	–	–	157416
Air Filter	–	–	–	106148
Drain Valve	–	–	–	127711
Hose	–	220598	220598	222063
Thermal Relief Valve	–	–	–	237893
Hose Reel Inlet Kit (Not Included)	218549	218549	218549	218549

*Order (218549) (1/2 in x 24 in) hose reel inlet kit separately.

Package 224534 installed on a bulk tank (not included in package).

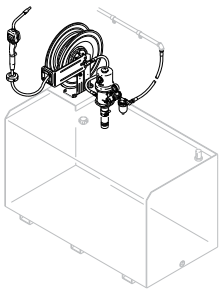

Fire-Ball 300 5:1 Oil Pump Packages

Oil | Gear Lube | ATF

Ordering Information

Lube Truck Packages

Package Number	222086*	206655*	204264*
Ratio	5:1	5:1	5:1
Package Type	Lube truck	Lube truck	Lube truck
Maximum Container Size	16 gal (60l) open-head	55 gal (200l) closed-head	55 gal (200l) closed-head
Pump	203872	203857	204254
Dispense/ Hose Fitting Kit	222063	222063	222063
Fluid Hose Size	1/2 in x 6 ft (12.7 mm x 1.8 m)	1/2 in x 6 ft (12.7 mm x 1.8 m)	1/2 in x 6 ft (12.7 mm x 1.8 m)
Cover	222060	207367	–
Pump Clamp	–	–	204095
Hold Down Kit	222061	207361	207361
Bung Adapter	–	–	224579
Instruction Manual	307883	307883	307883

*Order 3/8 in (9.5 mm) air regulator and gauge (109075) separately.

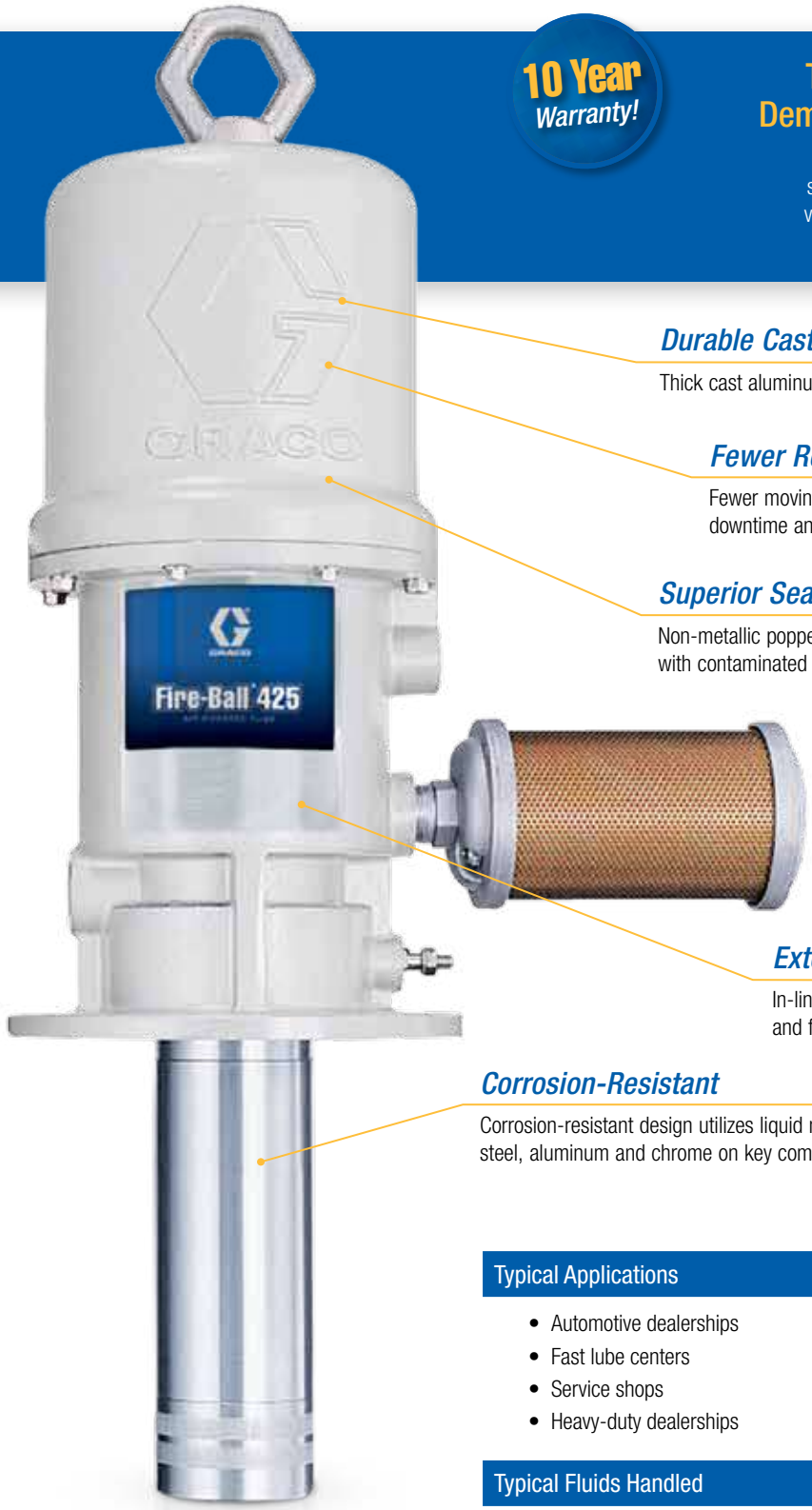

10 Year Warranty!

The Pump of Choice for Your Most Demanding High-Volume Applications

The Fire-Ball 425 features a 4.25 inch air motor to supply the power you need for long pipe runs and higher-volume dispensing. An ideal choice for applications where multiple dispenses happen at the same time.

Durable Casting

Thick cast aluminum air motor housing offers unmatched durability.

Fewer Repairs

Fewer moving parts in the air motor assembly means less downtime and low repair cost.

Superior Sealing

Non-metallic poppet valves offer positive sealing performance, even with contaminated “dirty” air environments for long life without repair.

Extended Seal Life

In-line pump design aligns the air motor piston and fluid piston rods to maximize seal life.

Corrosion-Resistant

Corrosion-resistant design utilizes liquid nitriding, nickel plating, stainless steel, aluminum and chrome on key components for longer life.

Typical Applications

- Automotive dealerships
- Fast lube centers
- Service shops
- Heavy-duty dealerships
- Fleet services facilities
- In-plant
- Lube trucks
- Mining

Typical Fluids Handled

- Petroleum- and synthetic-based oils (motor, gear and ATF)

Fire-Ball 425 Oil Pump Packages

Oil | Gear Lube | ATF

Pump Performance

Fire-Ball 425 3:1 Pumps

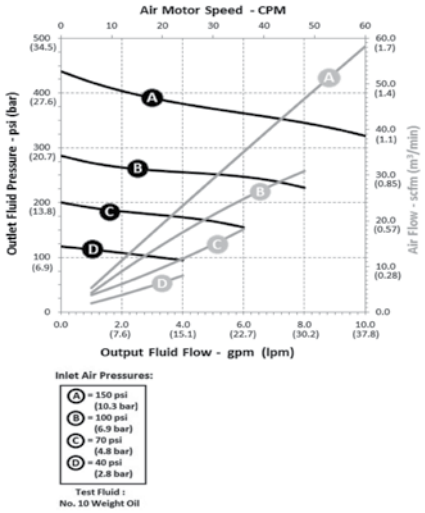

Fire-Ball 425 6:1 Pumps

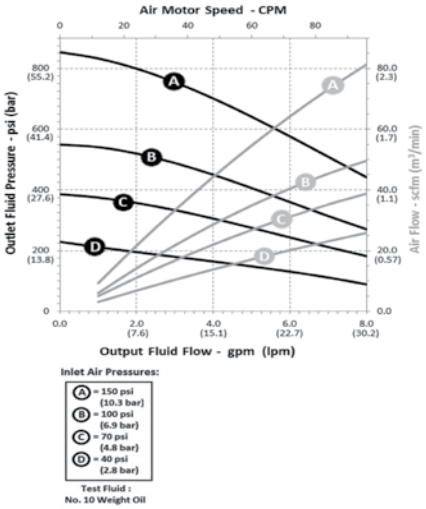

Fire-Ball 425 10:1 Pumps

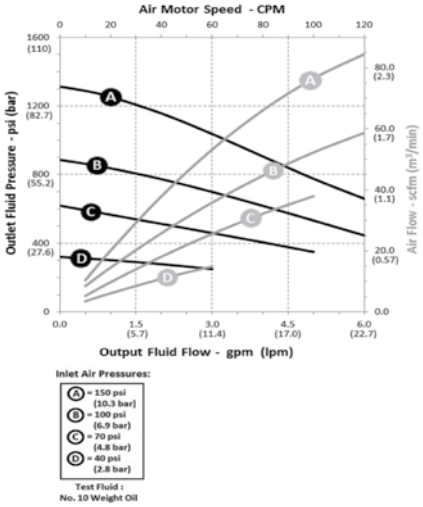

Technical Specifications

Fluid Pressure Ratio	3:1	6:1	10:1
Air Motor Effective Diameter	4.25 in (107.9 mm)	4.25 in (107.9 mm)	4.25 in (107.9 mm)
Maximum Fluid Working Pressure	540 psi (37 bar / 3.7 MPa)	1,100 psi (76 bar / 7.6 MPa)	1,800 psi (124 bar / 12.4 MPa)
Approximate Free Flow Rate @ 100 psi	28.7 gal/min (109 liters/min)	17.1 gal/min (65 liters/min)	11.7 gal/min (44 liters/min)
Output per Cycle	631 cc	261 cc	189 cc
Approximate Air Use and Flow @ 100 psi (80 cpm)	43 scfm @ 13.4 gpm (1.23 m³/min @ 50.6 lpm)	44 scfm @ 6.7 gpm (1.25 m³/min @ 25.4 lpm)	45 scfm @ 4.0 gpm (1.27 m³/min @ 15.2 lpm)
Air Inlet	1/2 in NPT(F)	1/2 in NPT(F)	1/2 in NPT(F)
Fluid Inlet	1-1/2 in NPT(F)	1-1/2 in NPT(F)	1-1/2 in NPT(F)
Fluid Outlet	3/4 in NPT(F)	3/4 in NPT(F)	3/4 in NPT(F)
Air Operation Range	40 psi to 180 psi (2.8 bar to 12 bar)	40 psi to 180 psi (2.8 bar to 12 bar)	40 psi to 180 psi (2.8 bar to 12 bar)
Maximum Recommended Pump Speed	66 cpm	78 cpm	60 cpm
Cycles per Gallon (Liter)	6 (1.6)	14.5 (3.8)	20 (5.3)
Wetted Parts	Steel, polyurethane, aluminum, nitrile	Steel, polyurethane, aluminum, nitrile	Steel, polyurethane, aluminum, nitrile
Sound Pressure Level	82 dB(A)	79.5 dB(A)	78 dB(A)
Approximate Weight	46 lb (20.9 kg)	35 lb (15.9 kg)	29 lb (13.2 kg)
Instruction Manual	308485	308608	308655

Ordering Information

Fire-Ball 425 Pumps

Part Number	Description
237526	3:1 Universal oil pump
238108	6:1 Universal oil pump
205626	10:1 Universal oil pump
222065	10:1 Oil pump, 55 gal (400 lb) drum size, cover mount
222095	10:1 Oil pump, 55 gal (400 lb) drum size, bung mount

Ordering Information

Oil Pump Packages

Package Number	244846	244628*	244847	225782**	225786**	225853**
Package Type	Wall-mounted	Wall-mounted	Wall-mounted	Cover-mounted	Bung-mounted	Universal supply
Maximum Container Size	Universal	Universal	Universal	55 gal (200 l)	55 gal (200 l)	Universal
Ratio	3:1	6:1	10:1	10:1	10:1	10:1
Pump	237526	238108	205626	222065	222095	205626
Hose/Fitting Kit	222068	222068	222068	222066	222066	222068
Fluid Hose Size	3/4 in x 1.5 ft	3/4 in x 1.5 ft	3/4 in x 1.5 ft	3/4 in x 6 ft	3/4 in x 6 ft	3/4 in x 1.5 ft
Air Hose Size	1/2 in x 1.5 ft	1/2 in x 1.5 ft	1/2 in x 1.5 ft	1/2 in x 6 ft	1/2 in x 6 ft	1/2 in x 1.5 ft
Cover	–	–	–	200326	–	–
Filter, Regulator, Lubricator [FRL]	217072	217072	217072	–	–	–
Air Shutoff Valve	110225	110225	110225	–	–	–
Fluid Shutoff Valve	108537	108537	108537	–	–	–
Wall Mount Bracket	238245	238245	238245	–	–	–
Instruction Manual	309351	309351	309351	307883	307883	306520

*Order low-level cut-off (203688) (1-1/2 in NPT) separately for metered dispense systems.
**Order low-level cut-off (203688) (1-1/2 in NPT) separately for metered dispense. Use 1/2 in (12.7 mm) air regulator (104266) and air pressure gauge (100960) as required; must be ordered separately.

Fire-Ball 425 Oil Pump Packages

Ordering Information

Lube Truck Packages

Package Number	206656*	222067*
Ratio	10:1	10:1
Package Type	Lube truck	Lube truck
Maximum Container Size	55 gal (200 l) closed-head	55 gal (200 l) closed-head
Pump	222065	222095
Dispense/ Hose Fitting Kit	222066	222066
Fluid Hose Size	1/2 in x 6 ft (12.7 mm x 1.8 m)	1/2 in x 6 ft (12.7 mm x 1.8 m)
Offset Cover	207367	–
Pump Clamp	–	204095
Hold Down Kit	207361	207361
Bung Adapter	–	224579
Instruction Manual	307883	307883

*Order 1/2 in (12.7 mm) air regulator (104266) and gauge (100960) separately.

5 Year Warranty!

Used for Low-Volume Transfer of Petroleum-Base Lubricants

This air-operated piston pump is ideal for pumping petroleum and synthetic-based oils and provides a continuous duty flow rate of up to 5 gpm.

High-Quality Air Motor

Differential air motor ensures smooth pumping.

Fewer Repairs

In-line design with fewer moving parts in the air motor assembly means less downtime and low repair cost.

Reliable Fluid Flow

Double-acting pump provides reliable fluid flow.

Durable

Rated for continuous duty in challenging applications.

Typical Applications

- Automotive dealerships
- Fast lube centers
- Service shops
- Heavy-duty dealerships
- Fleet services facilities
- In-plant
- Lube trucks
- Mining

Typical Fluids Handled

- Petroleum- and synthetic-based oils (motor, gear and ATF)

Pump Performance

Fast-Ball 1:1 Pumps

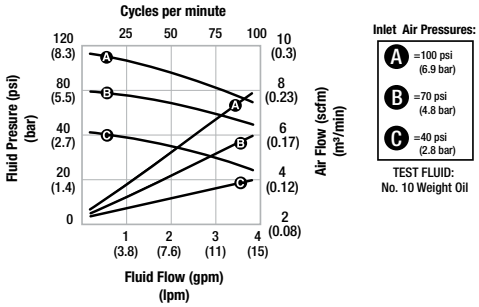

Fast-Ball 1:1 Oil Pumps

Oil | Gear Lube | ATF

Technical Specifications

Fluid Pressure Ratio	1:1
Air Motor Effective Diameter	1.4 in (35.6 mm)
Maximum Fluid Working Pressure	180 psi (12.5 bar / 1.25 MPa)
Approximate Free Flow Rate @ 100 psi	5 gal/min (19 liters/min)
Output per Cycle	151 cc
Approximate Air Use and Flow @ 100 psi (80 cpm)	7 scfm @ 3.1 gpm (0.20 m³/min @ 11.7 lpm)
Air Inlet	1/4 in NPT(F)
Fluid Inlet	1-1/2 in NPT(F)
Fluid Outlet	3/4 in NPT(F)
Air Operation Range	40 psi to 180 psi (2.8 bar to 12.4 bar)
Maximum Recommended Pump Speed	100 cpm
Cycles per Gallon	25 cpg
Cycles per Liter	6.6 cpl
Wetted Parts	CS, polyurethane
Sound Pressure Level	74.9 dB(A)
Sound Power Level	83.5 dB(A)
Approximate Weight	8 lb to 14 lb (3 kg to 7 kg)
Instruction Manual	307906

Ordering Information

Pumps

Pump Number	222103	222104	222051
Ratio	1:1	1:1	1:1
Type of Package	Bung-mounted	Bung-mounted	Universal
Container Size	55 gal (200 l)	275 gal (1,040 l)	Universal
Bung Adapter	222308	222308	–
Instruction Manual	307906	307906	307906

Pump Packages

Package Number	222602	239702
Ratio	1:1	1:1
Type of Package	Non-metered dispense	Metered dispense
Container Size	55 gal (200 l)	55 gal (200 l)
Pump	222103	222103
Dispense Kit	218115	239703
Regulator Assembly	218316	218316
Hose	109125	–
Hose Length	6 ft (1.8 m)	–
Bung Adapter	222308	222308
Instruction Manual	307637	307637

Use the quick-reference guide below to determine the part and accessory options available for our most popular oil pumps.

Oil Pump Mounting and Accessory Guide

Pump	Fast-Ball 1:1	Mini Fire-Ball 225 3:1	Fire-Ball 300 5:1	Fire-Ball 425 3:1	Fire-Ball 425 6:1	Fire-Ball 425 10:1
Bung Adapter	222308	222308	222308	–	–	222308
Connection Hose Kit	222118 (18 in / 4537 cm) 222119 (72 in / 182.8 cm)	222062 (18 in / 45.7 cm) 222063 (72 in / 182.8 cm)	222062 (18 in / 45.7 cm) 222063 (72 in / 182.8 cm)	238246 (24 in / 60.9 cm)	238246 (24 in / 60.9 cm)	222068 (18 in / 4537 cm) 222066 (72 in / 182.8 cm)
Wall Mounting Bracket	203987	203987	203987	238245	238245	203987
Thermal Relief Kit*	–	235998	237893	237601	240429	240429
Air Regulator and Gauge	110147	109075	109075	104266 / 100960	104266 / 100961	104266 / 100962
Air Filter	110146	106148	106148	106149	106149	106149
Air Lubricator	110148	214847	214847	214848	214848	214848
Filter, Regulator, Lubricator, and Gauge	110149	110150	110150	217072	217072	217072
Airline Shutoff Valve	110223	110224	110224	110225	110225	110225
Fluid Shutoff Valve	108537	108458	108458	108537	108537	108537
Fluid Outlet Filter	240417	240417	240417	101078	–	–
Low-Level Cutoff	203688	203688	203688	203688	203688	203688
Suction Hose Kit	236054	236054	236054	–	–	–

*Required

Oil Pump Accessories

Ordering Information

Bleed-Type Air Shut-Off Valves

Part Number	Description
110223	1/4 in NPT
110224	3/8 in NPT
110225	1/2 in NPT
110226	3/4 in NPT

Bung Adapters

Part Number	Description	Compatible Pumps	Includes				
			Double Tap bushing	Bushing Sleeve	1 ft x 3/8 in Hose	90° 3/8 in Adapter	Thumb Screw
222308	Allows direct mounting of all universal length and extended pumps to standard 2 NPT drum bung	Fast-Ball 1:1 Mini Fire-Ball 225 3:1 Fire-Ball 300 5:1 Fire-Ball 425 10:1	–	–	–	–	–
187754	Acetal bung adapter	All pumps	–	–	–	–	100220
176684	Bung adapter for suction kit 203992	–	–	–	–	–	100220
238125	For mounting universal pumps to tanks	Mini Fire-Ball 225 3:1 Fire-Ball 300 5:1 Fire-Ball 425 10:1	191075	172405	238370	155494	–

Carts

Part Number	Compatible Container Size
203650	5 gal (20 l) 10 gal (40 l) 16 gal (60 l)
222243	120 lb (55 kg)
111470	55 gal (200 l)

Clamps

Part Number	Description	Compatible Pumps
203156	Used to hold pump securely to the edge of an open top drum	Fast-Ball 1:1 Mini Fire-Ball 225 3:1 Fire-Ball 300 5:1 Fire-Ball 425 6:1 Fire-Ball 425 10:1
210880		Fire-Ball 300 5:1 Fire-Ball 425 10:1

Dispense Kits for Mini Fire-Ball and Fire-Ball 300 Pumps

Part Number	Description	Hose Length	Includes		
			Fluid Hose	Manual SD Gear Lube Valve	Manual
237075	Use with portable lubricators powered by Fire-Ball 300 Pump	6 ft	220591	255349	307884

Ordering Information

Downtube – Universal

Part Number	Description
15C502	1-1/2 in ID tube marked for standard container lengths from 20 in to 41 in (.51 m to 1.04 m)

Drum Covers

Part Number	Container Size	Compatible Pumps
200326	55 gal (200 l)	Mini Fire-Ball 225 3:1 Fire-Ball 300 5:1 Fire-Ball 425 10:1
24R350	16 gal (60 l)	Fast-Ball 1:1 Mini Fire-Ball 225 3:1 Fire-Ball 300 5:1 Fire-Ball 425 3:1, 6:1, 10:1
222058	5 gal (20 l)	Fast-Ball 1:1 Mini Fire-Ball 225 3:1 Fire-Ball 300 5:1, 15:1
160754	55 gal (200 l) 16 gal (60 l) 5 gal (20 l)	Bung-mounted pumps

Drum Elevator

Part Number	Description	Includes		
		Cover Support	Drum Elevator	Air Control Kit
241663	Air-powered elevator to speed up 55 gal (200 l) drum changes	207562	204385	207561

Fluid Shut-Off Valves

Part Number	Description
108458	1/2 in NPT
108537	3/4 in NPT
110314	1 in NPT

Fluid T-Strainers

Part Number	Description
240417	1/2 in inlet, 60 mesh strainer, which prevents foreign material from entering dispense lines
240418	3/8 in inlet, 60 mesh strainer, which prevents foreign material from entering dispense lines
238433	40 mesh replacement element, 3 count
238434	40 mesh replacement element, 25 count
238431	60 mesh (standard) replacement element, 3 count
238432	60 mesh (standard) replacement element, 25 count
238429	100 mesh replacement element, 3 count

Oil Pump Accessories

Ordering Information

Fluid Y-Strainers

Part Number	Description
110877	1/2 in NPT inlet/outlet strainer, which filters material before entering the pump
110906	1/2 in NPT inlet/outlet strainer, replacement screen
101078	3/4 in NPT inlet/outlet strainer, which filters material before entering the pump
180199	3/4 in NPT inlet/outlet strainer, replacement screen
110878	1 in NPT inlet/outlet strainer, which filters material before entering the pump
110907	1 in NPT inlet/outlet strainer replacement screen

Hose and Fitting Kits for Mini Fire-Ball 225 and Fire-Ball 300 5:1

	Part Number	Description	Connection Length	Includes			
				Air Hose	Air Hose Swivel Elbow	Fluid Hose	Fluid Hose Swivel Elbow
	222062	For connecting wall-mounted pumps to piping	18 in	204560	155494	220598	155470
	222063	Use with drum-mounted pumps	6 ft	203320	155494	220591	155470

Hose and Fitting Kits for Fire-Ball 425 Pumps

	Part Number	Description	Hose Length	Package Includes				
				Air Hose	Air Hose Swivel Elbow	Fluid Hose	Fluid Hose Swivel Elbow	Manual
	222068	For connecting wall-mounted Fire-Ball 425 10:1 pump to piping	15 in	218093	155470	109108	160327	306520
	238246	For connecting wall-mounted Fire-Ball 425 3:1 and 6:1 pumps to piping	24 in	218903	155470	238247	160327	306520
	222066	For use with drum-mounted Fire-Ball 425 10:1 pump	6 ft	205418	155470	109105	160327	307883

Ordering Information

Low-Level Cutoffs for Fast-Ball and Fire-Ball Pumps

	Part Number	Description
	203688	1-1/2 in NPT cutoff, which prevents air from entering pump when fluid supply from pump is exhausted

Portable Bases

	Part Number	Description	Compatible Container Size
	205054	Band dolly	5 gal (20 l)
	204144	Band dolly	10 gal (40 l) 16 gal (60 l)
	203622	Caster base	5 gal (20 l) 10 gal (40 l) 16 gal (60 l)

Runaway Valve

Prevents pump damage by automatically closing the air line to stop the pump when a runaway pump condition occurs due to an empty barrel or hose leak.

	Part Number	Inlet
	224040	3/4 in NPT(fbe)

Sealed Bung Adapters

	Part Number	Fire-Ball Length	Adapter Inside Diameter	Compatible Pumps
	204076	Full length	2.140 in	Mini Fire-Ball 225 3:1
	224579	Universal length	2.159 in	All except Mini Fire-Ball 225 3:1

Suction Kits

	Part Number	Description	Includes		
			Bung Adapter	Bushing Pipe	6 ft Hose
	236054	Allows use of Fast-Ball, Mini-Fire-Ball and Fire-Ball universal pumps to work with barrels	188845	101496	109105

Oil Pump Accessories

Ordering Information

Suction Tubes

Part Number	Container Size	Type of Mount	Compatible Pumps	Includes		
				Extension Size	Extension	Foot Spacer
238592	16 gal (60 l)	Cover-mounted	Fast-Ball 1:1 Mini Fire-Ball 225 3:1 Fire-Ball 300 5:1 Fire-Ball 425 10:1	14-1/2 in	191126	110127
238593	55 gal (200 l)	Cover-mounted		21-3/4 in	191128	110127
238595	55 gal (200 l)	Bung-mounted		26 in	191130	110127
238596	275 gal (1,100 l)	Bung-mounted		36 in	191131	110127

Thermal Relief Valve Kits

Part Number	Pressure Rating	Compatible Pumps	Includes			
			Valve	Bung Adapter	Swivel	6 ft Hose
235998	600 psi (41 bar)	Mini Fire-Ball 225 3:1	112174	191075	155494	238370
237893	900 psi (62 bar)	Fire-Ball 300 5:1 Fire-Ball 425 6:1	112174	191075	155494	238370
248296	900 psi (62 bar)	Fire-Ball 300 5:1 Fire-Ball 425 6:1	102527	–	–	109163
237601	600 psi (41 bar)	Fire-Ball 425 3:1	113053	191075	155494	238370
240429	1,600 psi (110 bar)	Fire-Ball 425 10:1	102527	191075	155494	238370
248324	1,600 psi (110 bar)	Fire-Ball 425 10:1	113053	–	–	109163

Tools for Working on Fire-Ball Air Motors

Part Number	Description
207579	Padded pliers
171818	Poppet gauge
168085	Insert tool

Wall-Mounting Brackets

Part Number	Description	Compatible Pumps
203987	Clamps onto universal pump tube	Fast-Ball 1:1 Mini Fire-Ball 300 3:1 Fire-Ball 300 5:1 Fire-Ball 425 10:1
238245	Mounts directly to pump flange	Fire-Ball 425 3:1, 6:1, 10:1
236778	Provides mounting to wall surface by flange	Fire-Ball 425 3:1

Move Large Amounts of Oil Fast

Tested to outperform and outlast all other pumps on the market – with its long-life design and intuitive, easy-to-use controls – the NXT High-Flo pump is the best value for the money. Fewer parts, faster repairs and long-lasting durability.

Optional DataTrak™ Control

Intuitive, easy-to-use DataTrak control gives you pump diagnostics, material usage tracking and pump runaway protection.

NXT Air Motor

Modular design for easier maintenance with rugged body armor that won't rust or dent.

Modular Air Valves

Easy-to-repair valve eliminates stalling and contains de-icing controls.

Integrated Air Controls

Easy-turn, lockable regulator is front-mounted for easy access. Compact and modular with built-in filtration.

Piston Valve with Floating Piston Seal

For maximum pressure balance over a range of material viscosities.

Typical Applications

- Fleet service facilities
- In-plant
- Mining

Typical Fluids Handled

- Petroleum- and synthetic-based oils (motor, gear and ATF)

NXT High-Flo Pumps

Oil | Gear Lube | ATF

Pump Performance

NXT 3.5:1 High-Flo Pumps

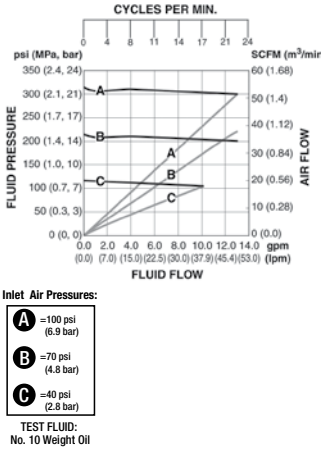

NXT 4.5:1 High-Flo Pumps

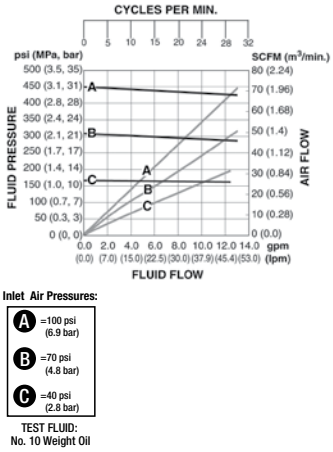

NXT 6:1 High-Flo Pumps

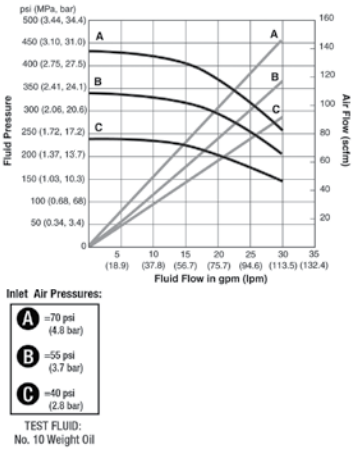

Technical Specifications

Fluid Pressure Ratio	3.5:1	4.5:1	6:1
Air Motor Effective Diameter	7.5 in (191 mm)	7.5 in (191 mm)	10.375 in (264 mm)
Maximum Fluid Working Pressure	350 psi (24 bar / 2.4 MPa)	450 psi (31 bar / 3.1 MPa)	500 psi (34 bar / 3.4 MPa)
Output per Cycle	2,000 cc	1,500 cc	2,000 cc
Air Inlet	3/4 in NPT(F)	3/4 in NPT(F)	3/4 in NPT(F)
Fluid Inlet	1-1/2 in NPT(F)	1-1/2 in NPT(F)	2 in NPT(F)
Fluid Outlet	1 in NPT(F)	1 in NPT(F)	2 in NPT(F)
Air Operation Range	20 psi to 100 psi (1.4 bar to 7 bar)	20 psi to 100 psi (1.4 bar to 7 bar)	20 psi to 75 psi (1.4 bar to 5.2 bar)
Maximum Recommended Pump Speed	60 cpm	60 cpm	60 cpm
Cycles per Gallon (Liter)	1.9 (0.5)	2.5 (0.67)	1.9 (0.5)
Wetted Parts	Stainless steel, PTFE, leather, UHMWPE, carbon steel	Stainless steel, PTFE, leather, UHMWPE, carbon steel	Stainless steel, PTFE, leather, UHMWPE, carbon steel
Sound Pressure Level	77 dB(A)	77 dB(A)	80 dB(A)
Sound Power Level	87 dB(A)	87 dB(A)	90 dB(A)
Approximate Weight	99 lb (44.9 kg)	99 lb (44.9 kg)	178 lb (80.7 kg)
Instruction Manuals	System – 312862 Pump – 311211 Pump Lower – 311690 Motor – 311238	System – 312862 Pump – 311211 Pump Lower – 311690 Motor – 311238	System – 312862 Pump – 311831 Pump Lower – 311832 Motor – 311238

Ordering Information

Oil Pump Packages with DataTrak

Package Number with DataTrak	247888	247889	247892	247893
Ratio	3.5:1	4.5:1	6:1	6:1
Mounting	255143 (Wall)	255143 (Wall)	255143 (Wall)	218742 (Stand)
Pump with DataTrak and Thermal Relief Kit	24D590	24D591	24D594	24D594
Output per Cycle	2,000 cc	1,500 cc	2,000 cc	2,000 cc
Output at 60 CPM	31.5 gpm (119.2 lpm)	23.2 gpm (87.8 lpm)	31.5 gpm (119.2 lpm)	31.5 gpm (119.2 lpm)
Motor Size	NXT 3400	NXT 3400	NXT 6500	NXT 6500
Maximum Fluid Pressure	350 psi (24.1 bar)	450 psi (31 bar)	500 psi (35.2 bar)	500 psi (35.2 bar)
Maximum Air Input Pressure	100 psi (6.9 bar)	100 psi (6.9 bar)	75 psi (5.2 bar)	75 psi (5.2 bar)
System Manual	312862	312862	312862	312862
Pump Manual	311211	311211	311831	311831
Pump Lower Manual	311690	311690	311832	311832
Motor Manual	311238	311238	311238	311238
Pump Inlet Size	1-1/2 in NPT	1-1/2 in NPT	2 in NPT	2 in NPT
Pump Outlet Size	1 in NPT	1 in NPT	2 in NPT	2 in NPT
4 ft x 3/4 in Air Hose	110048	110048	110048	110048
6 ft x 1 in Fluid Hose	115042	115042	247969	247969
Instruction Manual	309351	309351	307883	306520

Oil Pump Packages without DataTrak

Package Number without DataTrak	24D602	24D603	24D606	24D607
Ratio	3.5:1	4.5:1	6:1	6:1
Mounting	255143 (Wall)	255143 (Wall)	255143 (Wall)	218742 (Stand)
Pump without DataTrak and Thermal Relief Kit	24D596	24D597	24D600	24D600
Output per Cycle	2,000 cc	1,500 cc	2,000 cc	2,000 cc
Output at 60 CPM	31.5 gpm (119.2 lpm)	23.2 gpm (87.8 lpm)	31.5 gpm (119.2 lpm)	31.5 gpm (119.2 lpm)
Motor Size	NXT 3400	NXT 3400	NXT 6500	NXT 6500
Maximum Fluid Pressure	350 psi (24.1 bar)	450 psi (31 bar)	500 psi (35.2 bar)	500 psi (35.2 bar)
Maximum Air Input Pressure	100 psi (6.9 bar)	100 psi (6.9 bar)	75 psi (5.2 bar)	75 psi (5.2 bar)
System Manual	312862	312862	312862	312862
Pump Manual	311211	311211	311831	311831
Pump Lower Manual	311690	311690	311832	311832
Motor Manual	311238	311238	311238	311238
Pump Inlet Size	1-1/2 in NPT	1-1/2 in NPT	2 in NPT	2 in NPT
Pump Outlet Size	1 in NPT	1 in NPT	2 in NPT	2 in NPT
4 ft x 3/4 in Air Hose	110048	110048	110048	110048
6 ft x 1 in Fluid Hose	115042	115042	247969	247969
Instruction Manual	309351	309351	307883	306520

Oil | Gear Lube | ATF

Move Large Amounts of Oil Fast

Tested to outperform and outlast all other pumps on the market – with its long-life design and intuitive, easy-to-use controls – the NXT Dura-Flo pump is the best value for the money. Fewer parts, faster repairs and long-lasting durability.

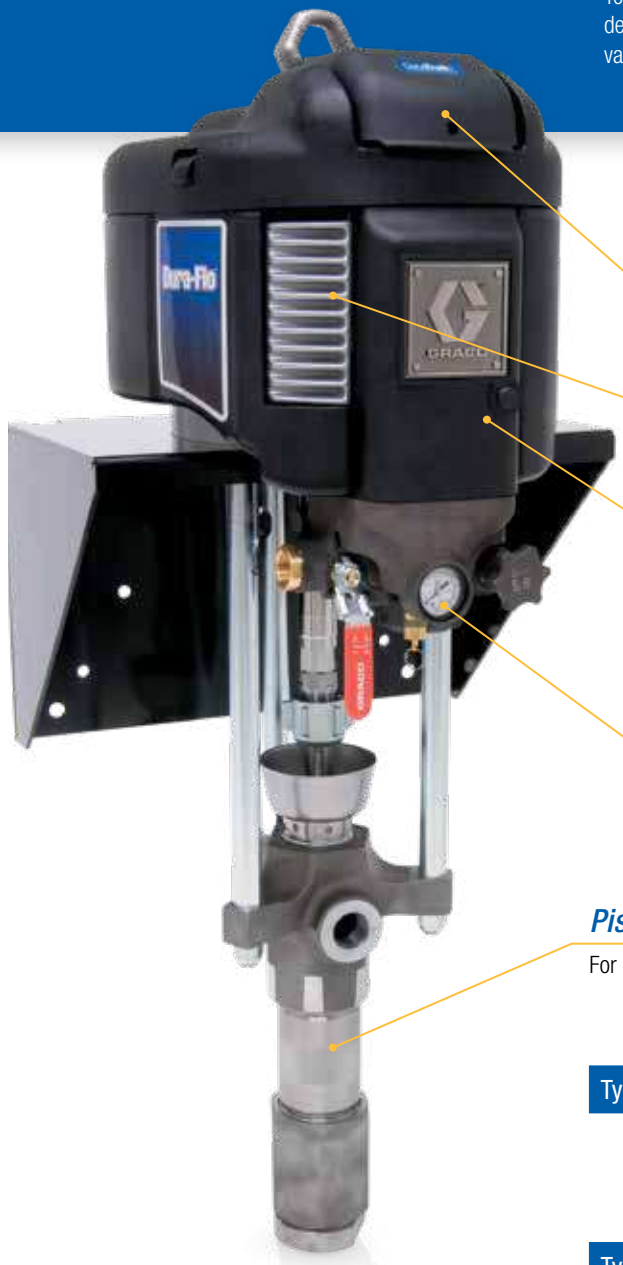

Optional DataTrak™ Control

Intuitive, easy-to-use DataTrak control gives you pump diagnostics, material usage tracking and pump runaway protection.

NXT Air Motor

Modular design for easier maintenance with rugged body armor that won't rust or dent.

Modular Air Valves

Easy-to-repair valve eliminates stalling and contains de-icing controls.

Integrated Air Controls

Easy-turn, lockable regulator is front-mounted for easy access. Compact and modular with built-in filtration.

Piston Valve with Floating Piston Seal

For maximum pressure balance over a range of material viscosities.

Typical Applications

- Fleet service facilities
- In-plant
- Mining

Typical Fluids Handled

- Petroleum- and synthetic-based oils (motor, gear and ATF)

Pump Performance

Inlet Pressures:

- **A** = 100 psi (6.9 bar) air pressure or 1500 (103 bar) hydraulic oil pressure
- **B** = 70 psi (4.8 bar) air pressure or 1050 (72 bar) hydraulic oil pressure
- **C** = 40 psi (2.8 bar) air pressure or 600 (41 bar) hydraulic oil pressure

TEST FLUID: No. 10 Weight Oil

NXT Dura-Flo 6:1 Pumps

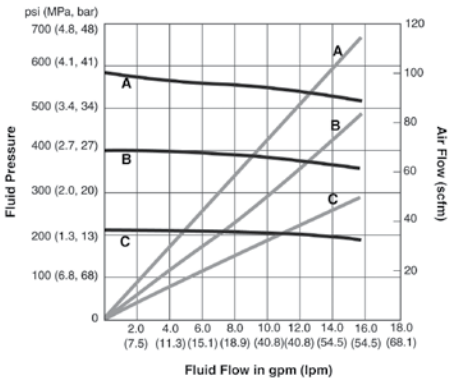

NXT Dura-Flo 10:1 Pumps

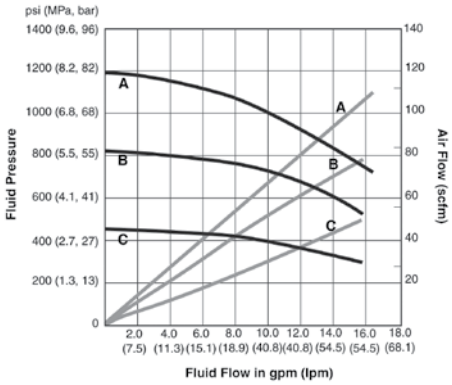

NXT Dura-Flo 12:1 Pumps

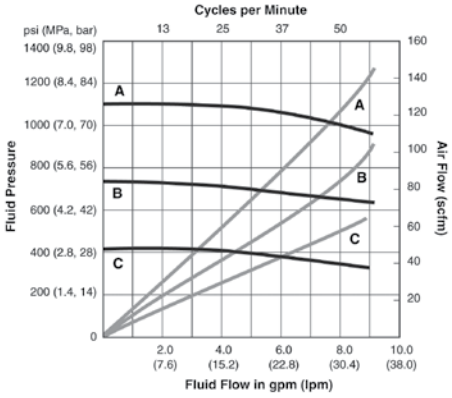

NXT Dura-Flo 23:1 Pumps

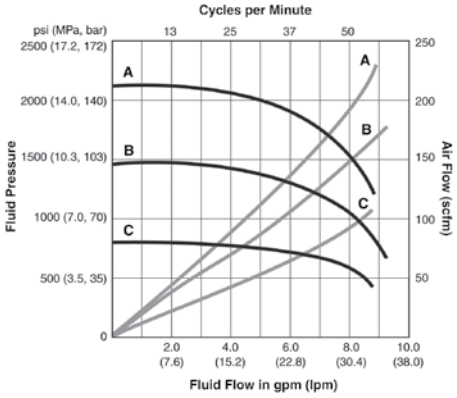

Oil Gear Lube ATF

Technical Specifications

Fluid Pressure Ratio	6:1	10:1	12:1	23:1
Air Motor Effective Diameter	7.5 in (191 mm)	10.375 in (264 mm)	7.5 in (191 mm)	10.375 in (264 mm)
Maximum Fluid Working Pressure	620 psi (43 bar / 4.3 MPa)	1,180 psi (81 bar / 8.1 MPa)	1,190 psi (82 bar / 8.2 MPa)	1,725 psi (119 bar / 11.9 MPa)
Output per Cycle	1,000 cc	1,000 cc	580 cc	580 cc
Air Inlet	3/4 in NPT(F)	3/4 in NPT(F)	3/4 in NPT(F)	3/4 in NPT(F)
Fluid Inlet	2 in NPT(F)	2 in NPT(F)	2 in NPT(F)	2 in NPT(F)
Fluid Outlet	1-1/2 in NPT(F)	1-1/2 in NPT(F)	1-1/2 in NPT(F)	1-1/2 in NPT(F)
Air Operation Range	20 psi to 100 psi (1.4 bar to 7 bar)	20 psi to 100 psi (1.4 bar to 7 bar)	20 psi to 100 psi (1.4 bar to 7 bar)	20 psi to 75 psi (1.4 bar - 5.2 bar)
Maximum Recommended Pump Speed	60 cpm	60 cpm	60 cpm	60 cpm
Cycles per Gallon (Liter)	3.8 (1.0)	3.8 (1.0)	6.5 (1.72)	6.5 (1.72)
Wetted Parts	Stainless steel, CS, chrome, zinc, nickel, Buna-N, tungsten carbide, nylon, UHMWPE, leather, PTFE, PEEK	Stainless steel, CS, chrome, zinc, nickel, Buna-N, tungsten carbide, nylon, UHMWPE, leather, PTFE, PEEK	Stainless steel, CS, chrome, zinc, nickel, tungsten carbide, ductile iron, acetal	Stainless steel, CS, chrome, zinc, nickel, tungsten carbide, ductile iron, acetal
Sound Pressure Level	77 dB(A)	80 dB(A)	77 dB(A)	80 dB(A)
Sound Power Level	87 dB(A)	90 dB(A)	87 dB(A)	90 dB(A)
Approximate Weight	113 lb (51.3 kg)	132 lb (59.9 kg)	92 lb (41.7 kg)	102 lb (46.3 kg)
Instruction Manuals	System – 312862 Pump – 311833 Pump Lower – 311717 Motor – 311238	System – 312862 Pump – 311833 Pump Lower – 311717 Motor – 311238	System – 312862 Pump – 311826 Pump Lower – 311825 Motor – 311238	System – 312862 Pump – 311826 Pump Lower – 311825 Motor – 311238

Ordering Information

Oil Pump Packages with DataTrak

Package Number with DataTrak	247890	247894	247891	247895
Ratio	6:1	10:1	12:1	23:1
Mounting	255143 (Wall)	255143 (Wall)	255143 (Wall)	255143 (Wall)
Pump with DataTrak and Thermal Relief Kit	24D592	24D595	24D593	–
Output per Cycle	1,000 cc	1,000 cc	580 cc	580 cc
Output at 60 CPM	17.4 gpm (65.9 lpm)	17.4 gpm (65.9 lpm)	9.2 gpm (34.8 lpm)	9.2 gpm (34.8 lpm)
Motor Size	NXT 3400	NXT 6500	NXT 3400	NXT 6500
Maximum Fluid Pressure	620 psi (42.7 bar)	1,180 psi (81.3 bar)	1,190 psi (82.1 bar)	1,725 psi (118.9 bar)
Maximum Air Input Pressure	100 psi (6.9 bar)	100 psi (6.9 bar)	100 psi (6.9 bar)	75 psi (5.2 bar)
System Manual	312862	312862	312862	312862
Pump Manual	311833	311833	311826	311826
Pump Lower Manual	311717	311717	311825	311825
Air Motor Manual	311238	311238	311238	311238
Pump Inlet Size	2 in NPT	2 in NPT	2 in NPT	2 in NPT
Pump Outlet Size	1-1/2 in NPT	1-1/2 in NPT	1-1/2 in NPT	1-1/2 in NPT
4 ft x 3/4 in Air Hose	110048	110048	110048	110048
6 ft x 1 in Fluid Hose	115042	115042	115042	115042
Instruction Manual	312862	312862	312862	312862

Oil Pump Packages without DataTrak

Package Number without DataTrak	24D604	24D608	24D605
Ratio	6:1	10:1	12:1
Mounting	255143 (Wall)	255143 (Wall)	255143 (Wall)
Pump without DataTrak and Thermal Relief Kit	24D598	24D601	24D599
Output per Cycle	1,000 cc	1,000 cc	580 cc
Output at 60 CPM	17.4 gpm (65.9 lpm)	17.4 gpm (65.9 lpm)	9.2 gpm (34.8 lpm)
Motor Size	NXT 3400	NXT 6500	NXT 3400
Maximum Fluid Pressure	620 psi (42.7 bar)	1,180 psi (81.3 bar)	1,190 psi (82.1 bar)
Maximum Air Input Pressure	100 psi (6.9 bar)	100 psi (6.9 bar)	100 psi (6.9 bar)
System Manual	312862	312862	312862
Pump Manual	311833	311833	311826
Pump Lower Manual	311717	311717	311825
Air Motor Manual	311238	311238	311238
Pump Inlet Size	2 in NPT	2 in NPT	2 in NPT
Pump Outlet Size	1-1/2 in NPT	1-1/2 in NPT	1-1/2 in NPT
4 ft x 3/4 in Air Hose	110048	110048	110048
6 ft x 1 in Fluid Hose	115042	115042	115042
Instruction Manual	312862	312862	312862

Dyna-Star® Hydraulic Pumps

Oil | Gear Lube | ATF

Field-Proven, Energy-Efficient

Hydraulic Dyna-Star pumps provide reliable, quiet, ice-free performance at maximum pressure and low-flow rates and are up to three times more energy efficient than comparable compressed-air systems.

Built-In Reliability

Self-lubricating vertical design for long life and reliable operation in high vibration environments.

Quiet Hydraulic Motor

No need for add-on mufflers.

High-Efficiency Motor

Uses less hydraulic oil.

Typical Applications

- Service shops
- Heavy-duty dealerships
- Fleet services facilities
- In-plant
- Lube trucks
- Mining

Typical Fluids Handled

- Petroleum- and synthetic-based oils (motor, gear and ATF)

Technical Specifications

Fluid Pressure Ratio	1:1	1:1	1/4:1	1:1 Stainless Steel
Pump Number	224741	224742	236753	237653
Applications	Oil dispensing	Oil dispensing	Bulk oil transfer	Anti-freeze dispensing
Drum Size	Universal	55 gal (200 l) Bung- or cover-mounted	Universal	Universal
Maximum Input Pressure	1,500 psi (102 bar)	1,500 psi (102 bar)	1,500 psi (102 bar)	1,000 psi (70 bar)
Maximum Fluid Input Volume	3 gpm (11.4 lpm)	3 gpm (11.4 lpm)	3 gpm (11.4 lpm)	3 gpm (11.4 lpm)
Maximum Output Flow Rate	3 gpm (11.4 lpm)	3 gpm (11.4 lpm)	10 gpm (37.9 lpm)	3 gpm (11.4 lpm)
Maximum Recommended CPM	60	60	60	60
Maximum Fluid Output Pressure	1,500 psi (102 bar)	1,500 psi (102 bar)	375 psi (25.1 bar)	1,500 psi (102 bar)
Hydraulic Supply Inlet	3/8 in NPT	3/8 in NPT	3/8 in NPT	3/8 in NPT
Hydraulic Return Outlet	3/4 in NPT	3/4 in NPT	3/4 in NPT	3/4 in NPT
Fluid Outlet	1/2 in NPT	1/2 in NPT	1/2 in NPT	1/2 in NPT
Fluid Inlet	1-1/2 in NPT	1-1/2 in NPT	1-1/2 in NPT	3/4 in NPT
Maximum Incoming Fluid Temp.	130°F (54°C)	130°F (54°°C)	130°F (54°C)	130°F (54°C)
Wetted Parts	Steel, copper, leather	Steel, copper, leather	Aluminum, steel, nitrile, polyurethane	Steel, copper, leather
Sound Pressure Level	77 dB(A)	77 dB(A)	77 dB(A)	77 dB(A)
Approximate Weight	24 lb (10.9 kg)	24 lb (10.9 kg)	48 lb (21.8 kg)	24 lb (10.9 kg)
Instruction Manual	308155	308155	308390	308155

Ordering Information

Dyna-Star Hydraulic Pumps

Part Number	Description
224741	1:1 Universal oil pump
224742	1:1 Oil pump for 55 gal (400 lb) drum size, bung- or cover- mounted
236753	1/4:1 Universal oil pump
237653	1:1 Universal stainless steel oil pump

Accessories

Drum Covers

Part Number	Description
200326	For 55 gal (200 l) drums
204574	For 16 gal (60 l) drums
222058	For 5 gal (20 l) pails
160754	For 5 gal (20 l), 16 gal (60 l) and 55 gal (200 l) bung-mounted pumps

Hydraulic Fluid Controls

Required for each pump.

	Part Number	Description
	236864	Dyna-Star fluid controls [1,500 psi (102 bar); 3 gpm (11.4 lpm)]. Includes manifold with pressure-reducing valve, flow-control valve, pressure gauge, shut-off ball valves, and 3 ft (0.9 m) supply and return hoses. Instruction manual 308395.
	237904	1:1 Dyna-Star thermal relief valve, 1,600 psi (110 bar)

Wall-Mounting Brackets

	Part Number	Description
	203987	For stubby/universal 1:1 Dyna-Star pump
	236778	For stubby/universal 1/4:1 Dyna-Star pump

Power-Star™ Hydraulic Pumps

Oil | Gear Lube | ATF

Field Proven, Energy Efficient

Hydraulic Power-Star pumps provide reliable, quiet, ice-free performance at maximum pressure and low flow rates and are up to three times more energy efficient than comparable compressed-air systems.

Built-In Reliability

Self-lubricating vertical design for long life and reliable operation in high vibration environments.

Quiet Hydraulic Motor

No need for add-on mufflers.

High-Efficiency Motor

Uses less hydraulic oil.

Typical Applications

- Service shops
- Heavy-duty dealerships
- Fleet services facilities
- In-plant
- Lube trucks
- Mining

Typical Fluids Handled

- Petroleum- and synthetic-based oils (motor, gear and ATF)

Technical Specifications

Fluid Pressure Ratio	1:1
Pump Number	236754
Applications	Bulk oil transfer
Drum Size	Universal
Maximum Input Pressure	1,500 psi (102 bar)
Maximum Fluid Input Volume	12 gpm (45.4 lpm)
Maximum Output Flow Rate	12 gpm (45.4 lpm)
Maximum Recommended CPM	60
Maximum Fluid Output Pressure	1,500 psi (102 bar)
Hydraulic Supply Inlet	3/4 in NPT
Hydraulic Return Outlet	1-1/4 in NPT
Fluid Outlet	1/2 in NPT
Fluid Inlet	1-1/2 in NPT
Maximum Incoming Fluid Temp.	130°F (54°C)
Wetted Parts	Iron, steel, stainless steel, nitrile, polyurethane
Sound Pressure Level	78 dB(A)
Approximate Weight	100 lb (45.4 kg)
Instruction Manual	308391

Ordering Information

Power-Star Hydraulic Pumps

Part Number	Description
236754	1:1 Universal oil pump

Accessories

Drum Covers

Part Number	Description
200326	For 55 gal (200 l) drums
204574	For 16 gal (60 l) drums
222058	For 5 gal (20 l) pails
160754	For 5 gal (20 l), 16 gal (60 l) and 55 gal (200 l) bung-mounted pumps

Hydraulic Fluid Controls

Required for each pump.

Part Number	Description
236865	Power-Star fluid controls [1,500 psi (102 bar); 12 gpm (45.4 lpm)]. Includes manifold with pressure-reducing valve, flow-control valve, pressure gauge, shut-off ball valves, and 3 ft (0.9 m) supply and return hoses. Instruction manual 308395.

Wall-Mounting Bracket

Part Number	Description
236778	For stubby/universal 1/4:1 Power-Star pump

Oil | Gear Lube | ATF

Ordering Information

16 Gallon (60 l) Metered and Non-Metered Dispensing Packages

Designed for manual dispensing of fluid oil from bulk containers to point of application.

Package Number	225880	225376	225384	225380	225378*
Fluids Handled	ATF	Gear lube	Gear lube	Gear lube	Gear lube
Package Type	Portable	Portable	Portable	Stationary	Portable
Pump Part Number	204867	204867	204867	204867	204867
Meter Dispense Kit	239707	239705	239705	–	–
Dispense Kit	–	–	–	214658	214658
Fluid Hose	–	–	6 ft x 1/2 in	6 ft x 1/2 in	6 ft x 1/2 in
Drum Cover	204574	204574	204574	204574	204574
Portable Base	203622	203622	–	–	203622
Cart	–	–	203650	–	–
Instruction Manual	306436	306436	306436	306436	306436

*Hydraulic; can be used for gear oil dispensing.

Ordering Information

Pail-Dispensing Package for 5 gal (20 l) Pails

Mounts on top of standard 5 gal (20 l) pail (pail not included). Dispenses 1.6 oz to 1.9 oz. (47.3 ml to 56.2 ml) per stroke.

Package Number	226289
Fluids Handled	Gear lube
Fluid Hose	4 ft (1.2 m)
Instruction Manual	306875

Pumping Bulk Lubricants from 16 gal (60 l) or 55 gal (200 l) Drums*

All pumps come with suction tube and bung adapter.

Package Number	114829	226290
Type of Pump	Lever[1]	Rotary[2]
Fluids Handled	Petroleum-based products, anti-freeze	Petroleum-based products
Delivery Rate	0.1 gal (0.4 l) per downstroke	1 gal (3.7 l) per 18 cycles
Fluid Hose	–	–
Instruction Manual	–	306876

*Drums not included.

1 Telescopic suction tube mounts 2 in NPT bung opening of 16 gal (60 l) or 55 gal (200 l) drum. Package includes bung adapter and spout outlet

2 Package has adjustable 2 in NPT bung mounting to allow use with either 16 gal (60 l) or 55 gal (200 l) drum. Package includes bung adapter and spout outlet

Notes

OIL DISPENSE METERS

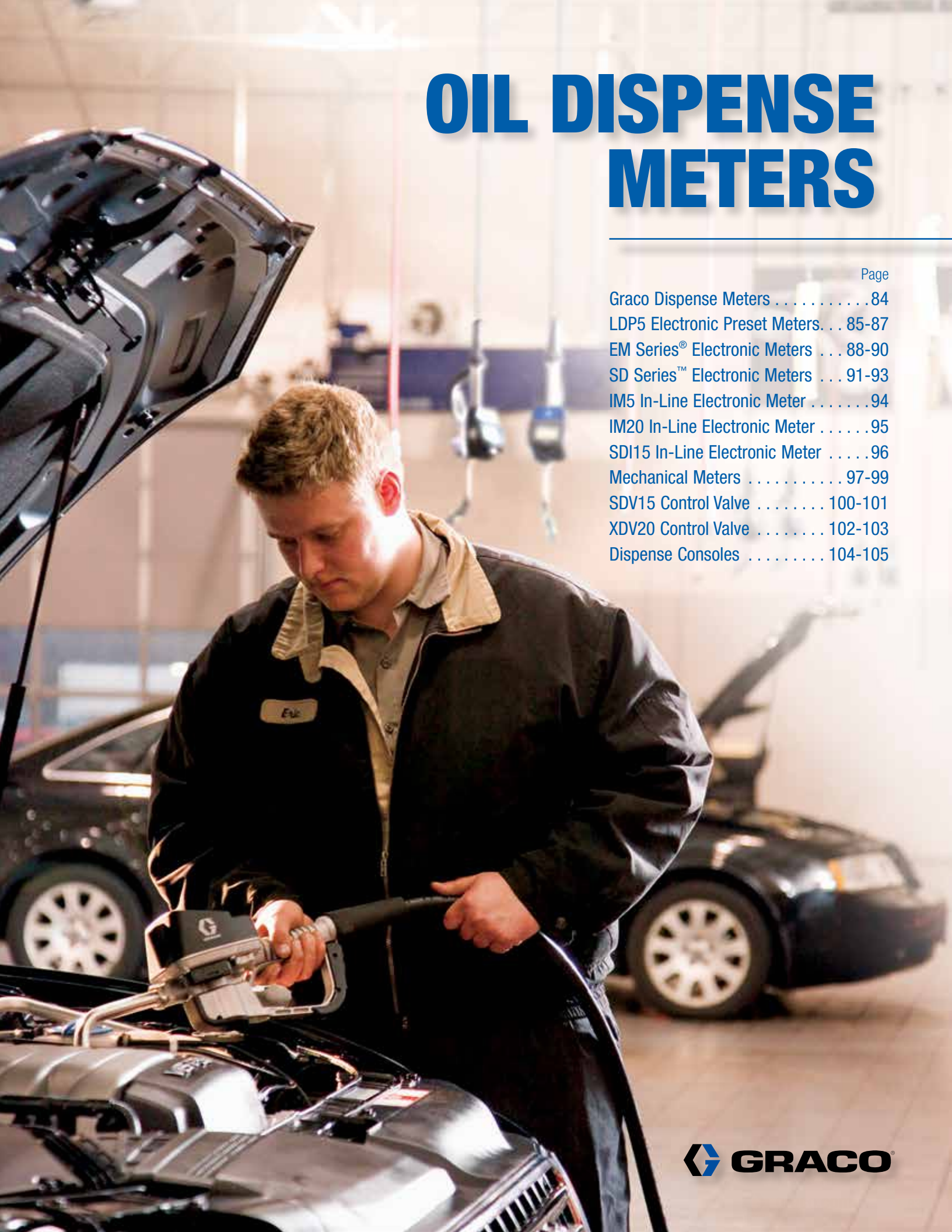

Page

Graco Dispense Meters 84
LDP5 Electronic Preset Meters. . . 85-87
EM Series® Electronic Meters . . . 88-90
SD Series™ Electronic Meters . . . 91-93
IM5 In-Line Electronic Meter 94
IM20 In-Line Electronic Meter 95
SDI15 In-Line Electronic Meter 96
Mechanical Meters 97-99
SDV15 Control Valve 100-101
XDV20 Control Valve 102-103
Dispense Consoles 104-105

GRACO®

Graco Dispense Meters

	Fluid	Manual/ Preset	Maximum Working Pressure	Maximum Flow Rate	Intended Use	Warranty	Reference Pages
LDP5 Electronic Preset Meters	• Petroleum- and synthetic-based oils (motor, gear and ATF) • Anti-freeze	Preset	1,000 psi (69 bar)	5 gpm (19 lpm)	Indoor	5 years overall (2 years electronics)	85-87
EM Series Electronic Meters	• Petroleum- and synthetic-based oils (motor, gear and ATF) • Anti-freeze	Manual	1,500 psi (103.4 bar)	20 gpm (76 lpm)	Indoor/ Outdoor	5 years overall (3 years electronics)	88-90
SD Series Electronic Meters	• Petroleum- and synthetic-based oils (motor, gear and ATF) • Anti-freeze	Manual/ Preset	1,500 psi (103.4 bar)	14 gpm (53 lpm)	Indoor/ Limited Outdoor	7 years overall (3 years electronics)	91-93
IM5 In-Line Meters	• Petroleum- and synthetic-based oils (motor, gear and ATF) • Anti-freeze • Windshield wash fluid	In-Line	500 psi (34 bar)	5 gpm (19 lpm)	Indoor/ Outdoor	5 years overall (2 years electronics)	94
IM20 In-Line Meters	• Petroleum- and synthetic-based oils (motor, gear and ATF) • Anti-freeze	In-Line	1,500 psi (103.4 bar)	20 gpm (76 lpm)	Indoor/ Outdoor	5 years overall (3 years electronics)	95
SDI15 In-Line Meters	• Petroleum- and synthetic-based oils (motor, gear and ATF) • Anti-freeze • Diesel exhaust fluid	In-Line	1,500 psi (103.4 bar)	15 gpm (56.8 lpm)	Indoor	7 years overall (3 years electronics)	96
Mechanical Meters	• Petroleum- and synthetic-based oils (motor, gear and ATF) • Anti-freeze	Manual/ Preset	1,500 psi (103.4 bar)	8 gpm (30 lpm)	Indoor/ Outdoor	5 years	97-99
SDV15 Control Valves	• Petroleum- and synthetic-based oils (motor, gear and ATF) • Anti-freeze	N/A	1,500 psi (103.4 bar)	15 gpm (56.8 lpm)	Indoor/ Outdoor	7 years	100-101
XDV20 Control Valves	• Petroleum- and synthetic-based oils (motor, gear and ATF) • Anti-freeze	N/A	1,500 psi (103.4 bar)	20 gpm (76 lpm)	Indoor/ Outdoor	7 years	102-103

LDP5 Electronic Preset Meters

Perfect for Lower-Volume Service Applications

For use in small service shops, fast lubes and low-volume in-plant applications.

Easy-to-Read LCD Screen

Keeps dispenses precise.

Operator Controls

Displays in quarts, pint, gallons or liters. Durable switches for long life.

Fluid Extension Kits

Choose from rigid or flexible extensions with automatic thermal compensating nozzle.

Rugged Meter Body

Superior impact resistance and long life.

Comfortable Handle

Ergonomically designed for operator comfort. Two-finger trigger with latching on preset models.

Fluid Swivel

1/2 inch fluid inlet.

Typical Applications

- Automotive dealerships
- Fast lube centers
- Service shops
- Fleet services facilities
- In-plant

Typical Fluids Handled

- Petroleum- and synthetic-based oils (motor, gear and ATF)
- Anti-freeze

Technical Specifications

Flow Range*	0.1 gpm to 5 gpm (0.4 lpm to 19 lpm)
Maximum Working Pressure	1,000 psi (69 bar)
Units of Measure	Quarts, pints, gallons, liters (factory set to quarts)
Accuracy**	+/- 0.5%
Inlet	1/2 in NPT
Outlet	1/2 in NPT
Maximum Totalizer	999,999 gallons or liters
Maximum Recorded Dispense	999.9 units
Maximum Preset Volume	999.9 units (LDP5 only)
Operating Temperature Range	32°F to 120°F (0°C to 48.8°C)
Storage Temperature Range	-30°F to 120°F (-34.4°C to 48.8°C)
Outdoor Use	No
Battery	9 volt alkaline
Battery Life	One year
Wetted Parts	SST, nitrile rubber, zinc, CS, LCP
Meter Pressure Loss*	90 psi (6.2 bar) @ 5 gpm (19 lpm)
Dimensions (without extension)	11 in L x 3.25 in W x 3.25 H (28 cm L x 8.3 cm W x 8.3 cm H)
Weight	3 lb (1.36 kg)
Warranty	Five years overall, two years electronics
Instruction Manual	312668

*Tested in 10W oil at 70°F. Flow rates vary with fluid pressure, temperature, viscosity, inlet and nozzle type.

**At 2.5 gpm (9.5 lpm) @ 70°F (21°C) with 10 wt. oil and 1 gal (3.8 l) dispensed. May require recalibration. Out-of-box accuracy ±1.25%. Not recommended for in-line installation.

Oil | Gear Lube | ATF | Anti-Freeze

Ordering Information

LDP5 Electronic Preset Meters

Automatic nozzle included

	Extension	Inlet in (mm)	Part Number	Package Includes	
				Trigger Guard	Swivel Cover
	Flexible	1/2 (13)	258694	Yes	Yes
	Rigid		256216	Yes	Yes
	Flexible		255277	No	No

Nozzle Extension Kits

	Extension	Fluid	Nozzle Description	Part Number
	Rigid	Oil/Anti-freeze	Automatic, thermally compensating	239949
		Gear lube	Automatic, thermally compensating	239950
		Gear lube	Automatic	238887
	Flexible	Oil/Anti-freeze	Automatic, thermally compensating	239951
	Nozzle Only	Oil/Anti-freeze/Gear lube	Automatic, thermally compensating	239829
		Oil/Anti-freeze/Gear lube	Automatic	238371

Ordering Information

EM5/PM5 to LD Series Upgrade Kits

	Part Number	Description
	257350	EM5 to LDM5
	257351	PM5 to LDP5

Accessories

	Part Number	Description
	240416	Inlet swivel
	114017	Inlet filter, 80 mesh
	240453	Valve repair kit

Protective Boots with Trigger Guards

	Part Number	Description
	247759	Black
	243835	Red
	243836	Blue
	243837	Green
	247760	Yellow

Swivel Covers

	Part Number	Description
	191294	Black
	191287	Red
	191288	Blue
	191289	Green
	191295	Yellow

Hose Identification Wraps

Vinyl hose wrap for easy identification of meter fluid.

	Part Number	Description
	17S659	Red
	17S660	Blue
	17S661	Green
	17S662	Yellow
	17S663	White

EM® Series Electronic Manual Dispense Meters

Oil | Gear Lube | ATF | Anti-Freeze

Up to 20 gpm (76 lpm)

Low-Flow and High-Flow Manual Meters

Building on the heritage of Graco's first electronic meter, the EM Series features a robust design at an affordable price. Our legacy valve handle features a long-life valve design for years of dependable service. These meters are weather-rated and impact-resistant to withstand the harshest shop conditions.

Twist-Close Nozzle Prevents Leaking

Multiple extensions available including rigid, flexible and gear lube.

High-Flow Rates

Capable of up to 20 gpm.

Long Battery Life

Features upgraded electronics and easily replaceable AAA batteries.

Prevent Accidental Dispenses

Easy-to-hold locking handle.

Proven in Harsh Conditions

Sealed electronics (IP69K) are protected against direct pressure washing and dust.

Legacy Valve

1/2 and 3/4 inch inlets, compatible with oil, ATF, anti-freeze and gear lube.

Typical Applications

- Automotive dealerships
- Service and fast lube centers
- Lube trucks
- Mining
- Heavy-duty dealerships
- Fleet service facilities
- In-plant

Typical Fluids Handled

- Petroleum- and synthetic-based oils (motor, gear and ATF)
- Anti-freeze

Technical Specifications	EM8	EM20
Flow Range	0.25 to 8 gpm (0.95 to 30.3 lpm)	0.25 to 20 gpm (0.95 to 75.7 lpm)
Maximum Operating Pressure	1,500 psi (102 bar)	
Unit of Measure	Quarts, gallons, pints, liters	
Accuracy/Repeatability	±0.5%	
Inlet	1/2 NPT	1/2 NPT or 3/4 NPT
Outlet	3/4 straight thread O-ring boss	7/8 straight thread O-ring boss
Maximum Totalizer	19,999 units	
Maximum Recorded Dispense	19,999 units	
Operating Temperature Range	-22°F to 180°F (-30°C to 82°C)	
Storage Temperature Range	-40°F to 185°F (-40°C to 85°C)	
Outdoor Use	Yes – IP69k as per DIN 40050-9	
Battery	2 (AAA) alkaline or 2 (AAA) lithium	
Wetted Parts	Aluminum, stainless steel, carbon steel, acetal, nitrile rubber, Geolast™	
Meter Pressure Loss*	30 psi @ 6 gpm	85 psi @ 12 gpm
Dimensions	13 in L x 3.5 in W x 5.25 in H (33 cm L x 9 cm W x 13.3 cm H)	
Weight	3 lbs (1.36 kg)	3.1 lbs (1.39 kg)
Warranty	Five years overall, three years electronics and 1 year wear parts	
Instruction Manual	3A5588	

** Tested in 10W oil at 70°F (21°C). Flow rate varies with fluid pressure, temperature, viscosity, inlet fitting size and nozzle type.*
Geolast is a registered trademark of Advanced Elastomer Systems.

Ordering Information

		Extension	Inlet in (mm)	Part Number
EM8		Flexible	1/2 (13)	25C904
		Rigid		25C903
		Gear		25C905
EM20		Flexible	1/2 (13)	25C915
			3/4 (19)	25C918
		Rigid	1/2 (13)	25C916
			3/4 (19)	25C919

		Inlet in (mm)	Part Number
EM8		1/2 (13)	25D433
EM20		1/2 (13)	25D436
		3/4 (19)	25D437

Ordering Information

Accessories

Part Number	Description
25D934	Electronic control replacement
129876	Black impact guard for EM8 or EM20
25D936	Battery kit: includes AAA batteries, Torx screws and bezel seal
100896	3/4 NPT(M) x 1/2 NPT(F) adapter

Hose Identification Wraps

Vinyl hose wrap for easy identification of meter fluid.

	Part Number	Description
	17S659	Red
	17S660	Blue
	17S661	Green
	17S662	Yellow
	17S663	White

Nozzle and Extension Kits

	Extension	Fluid	Nozzle Description	Part Number	Compatible Meters
	Rigid	Oil	Non-drip, manual open/close	26C267	EM8
			Non-drip, quick-close	255921	EM20
	Rigid	Gear lube	Non-drip, quick-close	255854	EM8
	Flexible	Oil	Non-drip, manual open/close	26C268	EM8
			Non-drip, quick-close	255859	EM20
	Nozzle Only	Oil/Anti-freeze	Non-drip, manual open/close	17T207	EM8
	Nozzle Only	Oil/Anti-freeze	Non-drip, quick-close	255793	EM20
	Nozzle Only	Gear lube	Non-drip, quick-close	255470	EM8
	Flexible	Oil/Anti-freeze	Extension only, 2 ft length	131733	EM8

Premium Quality and Performance with Ergonomic Design

Up to 18 gpm (68 lpm)

Graco's premium SD meters were designed from the ground up to provide the best user experience. These robust meters feature high flow, improved ergonomics and a large high-contrast LCD screen to make viewing dispense amounts easy in all lighting conditions.

Large LCD High-Contrast Display

High-contrast screen for reading in all lighting conditions with easy setup and navigation. See what fluid the meter is setup for and exactly how much you are dispensing.

Available in Two Models

Manual or preset options. Preset is compatible with Pulse™ FC and upgradeable to Pulse™ Pro.

High Flow

Available in two models – 8 gpm (30 lpm) or 18 gpm (68 lpm).

Durable Cast Body

Designed for heavy duty and harsh applications.

Automatic Quick-Close Nozzle

Choose from rigid or flexible extensions with non-drip performance.

Long-Life Valve Design

Cartridge design for fewer and easier repairs.

Ergonomic Handle Design

Four-finger trigger and easy-to-use button pad reduce worker fatigue.

Typical Applications

- Automotive dealerships
- Heavy-duty dealerships
- Fast lube centers
- Fleet service facilities
- Service shops
- In-plant
- Mining

Typical Fluids Handled

- Petroleum- and synthetic-based oils (motor gear, and ATF)
- Anti-freeze
- Windshield wash

Technical Specifications

Flow Range*	0.25 gpm to 18 gpm (0.9 lpm to 68 lpm)
Maximum Working Pressure	1,500 psi (103.4 bar)
Units of Measure	Pints, quarts, gallons, liters (factory set to quarts)
Metered Dispense Valve Accuracy**	+/- 0.5%
Inlet	1/2 in–14 NPT or 3/4 in–14 NPT
Outlet	3/4 in–16 straight thread O-ring Boss
Maximum Recorded Dispense	9999 units (factory set in quarts)
Operating Temperature Range	4°F to 158°F (-20°C to 70°C)
Storage Temperature Range	-40°F to 158°F (-40°C to 70°C)
Battery Life***	6 months
Wetted Parts	Aluminum, stainless steel, PBT, nitrile rubber, zinc plated carbon steel, nickel plated carbon steel
Dimensions (without extension)	13 in L x 3.75 in W x 5.75 in H (33 cm x 9.5 cm x 14.6 cm)
Weight	5.3 lb (2.4 kg)
Warranty	Five years overall, three years electronics
Instruction Manual	3A6711 and 3A6673

*Tested in 10W motor oil. Flow rates vary with fluid pressure, temperature and viscosity.
**At 2.5 gpm (9.5 lpm), at 70°F (21°C), with 10-weight oil and 1 gallon dispensed. May require calibration.
***Battery required to meet life expectancy: Energizer® Alkaline E91.

Oil | Gear Lube | ATF | Anti-Freeze | Washer Fluid

Ordering Information

SD Electronic Meters

26C384

25M406

	Dispense Type	Flow Range gpm (lpm)	Fluid	Extension	Inlet in (NPT)	Part Number
SDP8	Preset (Pulse FC-enabled)	0.25–8 (1–30)	Oil	Rigid	1/2	26C384
				Flexible	1/2	26C354
			Anti-freeze	Rigid	1/2	26C385
				Flexible	1/2	26C355
			Gear lube	Rigid	1/2	26C358
SDP18	Preset (Pulse FC-enabled)	0.25–18 (1–68)	Oil	Flexible	1/2	26C357
				Flexible	3/4	26C361
				Rigid	3/4	26C360
				Rigid	1/2	26C356
SDM8	Manual	0.25–8 (1–30)	Oil	Flexible	1/2	25M406
				Rigid	1/2	25M404
			Anti-Freeze	Flexible	1/2	25M407
				Rigid	1/2	25M405
			Gear Lube	Rigid	1/2	25M413
			Windshield Wash	Rigid	1/2	25M415
SDM18	Manual	0.25–18 (1–68)	Oil	Flexible	3/4	25M417
				Rigid	3/4	25M416
				Flexible	1/2	25M411
				Rigid	1/2	25M410

Nozzle and Extension Kits

	Extension	Fluid	Nozzle Description	Part Number	Compatible Meters
	Rigid	Oil	Non-drip, quick-close	255852	SDM8/SDP8
		Anti-freeze	Non-drip, manual open/close	26C267	SDM8/SDP8
		Oil/Anti-freeze	High-flow, non-drip, quick-close	255857	SDM18/SDP18
	Rigid	Gear lube	Non-drip, quick-close	255854	SDM8/SDP8
	Flexible	Oil	Automatic, non-drip, quick-close	255853	SDM8/SDP8
		Anti-freeze	Non-drip, manual open/close	26C268	SDM8/SDP8
		Oil/Anti-freeze	High-flow, non-drip, quick-close	255858	SDM18/SDP18
	Nozzle Only	Oil	Automatic, non-drip, quick-close	17R220	SDM8/SDP8
	Nozzle Only	Gear lube	Non-drip, quick-close	255470	SDM8/SDP8
	Nozzle Only	Oil/Anti-freeze	Non-drip, manual open/close	17T207	SDM8/SDP8
	Flexible	Oil/Anti-freeze	Extension only, 2 ft length	131733	SDM8/SDP8
	Rigid	Windshield wash	Extension, nozzle	273079	SDM8

Ordering Information

Filter Kits for SD Series Meters

	Part Number	Description
	255885	Kit includes filters/ strainers, spacers and O-rings

Impact Protection

	Part Number	Description
	131226	Pulse/SD meter boot

Swivel Covers

	Part Number	Description
	15T366	Black
	15T367	Red
	15T368	Blue
	15T369	Green
	15T370	Yellow

Hose Identification Wraps

Vinyl hose wrap for easy identification of meter fluid.

	Part Number	Description
	17S659	Red
	17S660	Blue
	17S661	Green
	17S662	Yellow
	17S663	White

IM5 In-Line Electronic Meter

Oil | Gear Lube | ATF | Anti-Freeze | Washer Fluid

Up to 5 gpm (19 lpm)

Easy Battery Replacement

Operates on single 9V alkaline battery.

Tracks Totals in Two Modes

Reset total for a periodic dispense history and non-reset total for the meter's total dispense history.

Heavy-Duty Construction

For indoor or outdoor use.

Easy-to-Read LCD

Simple operator controls and measures in pints, quarts, liters or gallons

Typical Applications

- Automotive dealerships
- Fast lube centers
- Service shops
- Fleet services facilities
- In-plant

Typical Fluids Handled

- Petroleum- and synthetic-based oils (motor, gear and ATF)
- Anti-freeze
- Windshield washer fluid

Technical Specifications

Flow Range*	0.5 gpm to 5 gpm (1.9 lpm to 19 lpm)
Maximum Working Pressure	500 psi (34 bar)
Units of Measure	Quarts, pints, gallons, liters (factory-set to quarts)**
Accuracy	± 0.5%
Inlet/Outlet	1/2 NPT
Maximum Totalizer	99,999
Maximum Recorded Dispense	999.99
Operating Temperature Range	-4°F to 122°F (-20°C to 50°C)
Storage Temperature Range	-13°F to 122°F (-25°C to 50°C)
Outdoor Use	Yes
Battery	9-volt, alkaline
Wetted Parts	Nickel, zinc, zenite, nitrile rubber
Meter Pressure Loss*	25 psi (1.7 bar) @ 5 gpm (19 lpm)
Dimensions	4.25 in L x 3.25 in W x 2.0 in H (10.8 cm L x 8.3 cm W x 5.1 cm H)
Weight	1.8 lb (0.8 kg)
Warranty	Five years overall, two years electronics
Instruction Manual	308687

*Tested in 10W oil at 70°F. Flow rates vary with fluid pressure, temperature and viscosity.
**Display shows quantity in 0.01 increments up to 999.99 gallons, quarts, pints or liters. Totalizes in gallons or liters up to 99,999 units.

Ordering Information

Meter

Part Number	Description
239824	IM5 low pressure – low-flow in-line meter

Accessory

	Part Number	Description
	239876	Strainer kit

High-Flow In-Line Meter

Graco's IM20 in-line meter is weather-rated and shock-resistant, protecting the electronics from intense, high-pressure cleaning and mechanical vibration common in industrial applications.

Up to 20 gpm (76 lpm)

Easy-to-Read LCD

Simple operator control. Measures in quarts, gallons, pints and liters.

Easy Battery Replacement

Long-lasting, replaceable AAA batteries.

Sealed Electronics

IP69K-rated meter. Electronics are safe from pressure washing and dusty environments.

Tracks Totals in Two Modes

Reset total for a periodic dispense history and non-reset total for the meter's total dispense history.

Typical Applications

- Automotive dealerships
- Service and fast lube centers
- Lube trucks
- Mining
- Heavy-duty dealerships
- Fleet service facilities
- In-plant

Typical Fluids Handled

- Petroleum- and synthetic-based oils (motor, gear and ATF)
- Anti-freeze

Technical Specifications

Flow Range*	0.25 to 20 gpm (0.95 to 75.7 lpm)
Maximum Working Pressure	1,500 psi (102 bar)
Unit of Measure	Quarts, pints, gallons, liters (factory set to quarts)
Accuracy/Repeatability	±0.5%
Inlet/Outlet	3/4 NPT
Maximum Totalizer	19,999 units
Maximum Recorded Dispense	19,999 units
Operating Temperature Range	-22°F to 180°F (-30°C to 82°C)
Storage Temperature Range	-40°F to 185°F (-40°C to 85°C)
Outdoor Use	Yes – IP69k as per DIN 40050-9
Battery	2 (AAA) alkaline or (2) AAA lithium
Wetted Parts	Aluminum, stainless steel, carbon steel, acetal, nitrile rubber, Geolast™
Meter Pressure Loss*	35 psi @ 12 gpm
Dimensions	4.2 in L x 3.4 in W x 3.2 in H (10.7 cm L x 8. cm W x 8.1 cm H)
Weight	1 lb. 4 oz. (0.57 kg)
Warranty	Five years overall, three years electronics
Instruction Manual	3A5588

**Tested in 10W oil at 70°F (21°C). Flow rate varies with fluid pressure, temperature, viscosity, inlet fitting size and nozzle type.*
Geolast is a registered trademark of Advanced Elastomer Systems.

Ordering Information

Part Number	Description
25C841	IM20 high-flow, high-pressure in-line meter

SDI15 In-Line Electronic Meter

Oil | Gear Lube | ATF | Anti-Freeze | Washer Fluid | Diesel Exhaust Fluid (DEF)

Up to 15 gpm (57 lpm)

Energy Efficient

Powered by two AA alkaline batteries.

Tracks Totals in Two Modes

Reset total for a periodic dispense history and non-reset total for the meter's total dispense history.

Rugged Stainless Steel Body

Remains corrosion free in hard environments for years of trouble-free service.

Large, Easy-to-Read LCD

Simple operator controls and measures in pints, quarts, liters or gallons.

Typical Applications

- Automotive dealerships
- Fast lube centers
- Service shops
- Heavy-duty dealerships
- Fleet services facilities
- In-plant
- Mining

Typical Fluids Handled

- Petroleum- and synthetic-based oils (motor, gear and ATF)
- Anti-freeze
- Windshield washer fluid
- Diesel exhaust fluid

Technical Specifications

Flow Range*	0.5 gpm to 15 gpm (1.9 lpm to 57 lpm)
Maximum Working Pressure	1,500 psi (103 bar)
Units of Measure	Quarts, pints, gallons, liters (factory-set to quarts)
Accuracy	± 0.5%
Inlet/Outlet	1/2 NPT
Maximum Totalizer	99,999
Maximum Recorded Dispense	999.99
Operating Temperature Range	-4°F to 122°F (-20°C to 50°C)
Storage Temperature Range	-13°F to 122°F (-25°C to 50°C)
Outdoor Use	No
Battery	2AA alkaline
Wetted Parts	Nitrile rubber, SST and Geolast
Meter Pressure Loss*	22 psi (1.5 bar) @ 14 gpm (53 lpm)
Dimensions	5 in L x 3 in W x 2.75 in H (12.7 cm L x 7.6 cm W x 7 cm H)
Weight	1.8 lb (0.8 kg)
Warranty	Seven years overall, three years electronics
Instruction Manual	313048

*Tested in 10W oil at 70°F. Flow rates vary with fluid pressure, temperature and viscosity.

Ordering Information

Meters

Part Number	Description
247453	SDI15 medium/high pressure – medium-/high-flow in-line meter for petroleum- and synthetic-based oils, anti-freeze and windshield washer fluid
24G738	SDI15 medium/high pressure – medium-/high-flow in-line meter for diesel exhaust fluid applications (BSPP)

Accessories

	Part Number	Description
	108458	Shutoff ball valve 1/2 NPT(F)
	223179	Strainer kit 1/2 NPT(F) 1/2 NPT(M)

Accurate Dispensing for a Wide Variety of Vehicle or Machine Service Applications

Ideal for indoor or outdoor use in all size shops.

Up to 8 gpm (30.2 lpm)

Impact-Resistant Shroud

Resists scratches and protects knob and dial from damage.

Simple, Easy Design

Dial and face design is easy to read and set.

Fluid Swivel

1/2 inch fluid inlet.

Fluid Extension Kits

Choose from rigid or flexible with automatic thermal compensating nozzle.

Built-In Totalizer

Helps manage material usage.

Durable Cast Housing

Durable aluminum body is balanced and lightweight with comfortable grip.

Typical Applications

- Automotive dealerships
- Fast lube centers
- Service shops
- Heavy-duty dealerships
- Fleet services facilities
- In-plant
- Lube trucks
- Mining

Typical Fluids Handled

- Petroleum- and synthetic-based oils (motor, gear and ATF)
- Anti-freeze

Technical Specifications

Flow Range*	0.28 gpm (1.0 lpm) to 8 gpm (30.2 lpm)
Maximum Working Pressure	1,500 psi (103 bar)
Units of Measure	Quarts, gallons, liters
Accuracy	± 1%
Inlet	1/2 in NPT
Outlet	3/4-16 straight thread O-ring boss
Maximum Totalizer	99,999 units
Maximum Recorded Dispense	60 gallons
Operating Temperature Range	-50°F to 160°F (-45°C to 70°C)
Outdoor Use	Yes
Wetted Parts	Brass, aluminum, SST, TPE
Meter Pressure Loss*	30 psi (2.1 bar) @ 4 gpm (15 lpm)
Dimensions	11.5 in L x 5 in W x 6.3 in H (29.2 cm L x 12.7 cm W x 16 cm H)
Weight	3.5 lb (1.6 kg)
Warranty	Five years
Instruction Manual	333492

**Tested with 10W motor oil. Minimum/maximum flow rates will vary with fluid viscosity.*

Oil | Gear Lube | ATF | Anti-Freeze

Ordering Information

Manual Meters

	Extension	Model Description	Part Number
	Bare	4/16 Liter	24U956
		4/16 Quart	24U959

Manual Meter Packages

	Extension	Model Description	Part Number	Replacement Nozzle/Extension Kit
	Flexible	4/16 Liter	24V043	255853
		4/16 Quart	24V034	255853
	Rigid	4/16 Liter	24V046	255852
		4/16 Quart	24V037	255852
	Gear Lube	4/16 Liter	24V049	255854
		4/16 Quart	24V040	255854

Preset Meters

	Extension	Model Description	Part Number
	Bare	60 Gallon	24U950
		60 Liter	24U953
		60 Quart	24U947

Ordering Information

Preset Meter Packages

	Extension	Model Description	Part Number	Package Includes Nozzle Extension
	Flexible	60 Gallon	24Z129	255853
		60 Liter	24Z132	255853
		60 Quart	24Z126	255853
	Rigid	60 Gallon	24Z128	255852
		60 Liter	24Z131	255852
		60 Quart	24Z125	255852
	Short Rigid	60 Gallon	24V055	24W641
		60 Liter	24V058	24W641
		60 Quart	24V052	24W641
	Gear Lube	60 Gallon	24Z130	255854
		60 Liter	24Z133	255854
		60 Quart	24Z127	255854

Nozzle Extensions

	Fluid	Extension	Compatible Meter	Part Number
	Oil	Flexible	Manual	255853
		Rigid	Manual	255852
		Short Rigid	Preset	24W641
	Anti-freeze	Flexible	Manual/Preset	24W306
		Rigid	Manual/Preset	255855
	Oil/Anti-freeze	Flexible (extension only – 2 ft)	Manual/Preset	131733
	Gear lube	Rigid	Manual	255854

Accessories

	Part Number	Description
	256164	Strainer filter kit, 10-pack

SDV15 Control Valve

Oil | Gear Lube | ATF | Anti-Freeze

Up to 15 gpm (76 lpm)

For Standard and Heavier-Duty Applications

Designed to perform in larger dealerships, fleet maintenance shops, municipal garages and higher-volume in-plant applications with longer plumbing runs and larger fluid usage.

Fluid Extension Kits

Choose from rigid or flexible extensions.

Lock-On/Lock-Off Trigger

For hands-free operation.

Sturdy Cast Body

Designed for use in tough environments.

Fluid Swivel

1/2 inch fluid inlet.

Typical Applications

- Automotive dealerships
- Fast lube centers
- Service shops
- Lube trucks
- Heavy-duty dealerships
- Fleet services facilities
- In-plant
- Lube trucks
- Mining

Typical Fluids Handled

- Petroleum- and synthetic-based oils (motor, gear and ATF)
- Anti-freeze

Technical Specifications

Flow Range*	15 gpm (56.8 lpm)
Maximum Working Pressure	1,500 psi (103 bar)
Inlet	1/2 in NPT
Outlet	3/4-16 straight thread O-ring boss
Operating Temperature Range	-40°F to 180°F (-40°C to 82°C)
Outdoor Use	Yes
Wetted Parts	Aluminum, SST, CS, acetal, nitrile rubber, tpe
Dimensions	12 in L x 8.4 in W x 2.4 in H (30.5 cm L x 21.3 cm W x 6.1 cm H)
Weight	0.4 lb (0.18 kg)
Warranty	Seven years
Instruction Manual	312789

*Tested in 10W oil at 70°F. Flow rates vary with fluid pressure, temperature, viscosity, inlet fitting and nozzle type.

Ordering Information

SDV15 Control Valve

	Fluid	Extension	Inlet in (mm)	Part Number
	Oil	Rigid	1/2 (13)	247712
		Flexible		247713
	Anti-freeze	Rigid		247715
		Flexible		247716
	Gear	Gear		247714

SDV15 Bare Control Valve

	Inlet in (mm)	Part Number
	1/2 (13)	247717

High Flow Nozzles with Extension

	Extension	Part Number
	Rigid	255857
	Flexible	255858

Filter Kit

	Description	Part Number
	Strainer filter kit	256164

Quick Close Nozzle

Extension sold separately.

	Fluid	Part Number
	Oil	17R220
	Anti-freeze	255460
	Gear lube	255470
	Oil/Anti-freeze (high-flow)	255461

XDV20 Control Valve

Oil | Gear Lube | ATF | Anti-Freeze

For Standard and Heavier-Duty Applications

Designed to perform in larger dealerships, fleet maintenance shops, municipal garages and higher-volume in-plant applications with longer plumbing runs and larger fluid usage.

Up to 20 gpm (76 lpm)

Fluid Extension Kits

Choose from rigid or flexible extensions with automatic flush-mount nozzle design that re-seats after each dispense to prevent dirt contamination.

Lock-On/Lock-Off Trigger

For hands-free operation.

Sturdy Cast Body

Designed for use in tough environments.

1/2 and 3/4 Inch Inlet with Swivel Options

Meets standard and high flow requirements.

Typical Applications

- High-flow, non-metered oil dispense
- Automotive dealerships
- Heavy-duty dealerships
- Fast lube centers
- Fleet service facilities
- In-plant
- Lube trucks
- Mining

Typical Fluids Handled

- Petroleum- and synthetic-based oils (motor, gear and ATF)
- Anti-freeze

Technical Specifications

Flow Range*	Up to 20 gpm (75.7 lpm)
Maximum Working Pressure	1,500 psi (103 bar)
Inlet	1/2 in or 3/4 in NPT
Outlet	7/8-14 straight thread O-ring boss
Operating Temperature Range	-40°F to 180°F (-40°C to 82°C)
Outdoor Use	Yes
Wetted Parts	Aluminum, SST, CS, acetal, nitrile rubber, Geolast
Dimensions	12 in L x 8.4 in W x 2.4 in H (30.5 cm L x 21.3 cm W x 6.1 cm H)
Weight	0.4 lb (0.18 kg)
Warranty	Seven years
Instruction Manual	308642

*Tested in 10W oil at 70°F. Flow rates vary with fluid pressure, temperature, viscosity, inlet fitting and nozzle type.

Ordering Information

XDV20 Control Valve

Includes high flow, quick-close nozzle.

	Extension	Inlet in (mm)	Part Number
	Rigid	1/2 (13)	247718
		3/4 (19)	247722
	Flexible	1/2 (13)	247721
		3/4 (19)	247723

XDV20 Bare Control Valve

	Inlet in (mm)	Part Number
	1/2 (13)	247724
	3/4 (19)	247725

Accessories

	Part Number	Description
	255793	Quick-close high-flow nozzle for oil, ATF and anti-freeze
	255859	Flexible extension with quick-close nozzle (255793)
	255921	Rigid extension with quick-close nozzle (255793)

Ordering Information

Lubricant Dispense Consoles

Includes upper and lower plates with roller guides and brackets. Hoses not included.

	Part Number	Description	Package Includes	
			Dispense Valve Brackets (qty)	Water Bib Brackets (qty)
	222629	Six-station console	196471 (5)	110236 (1)
	223448	Four-station console	196471 (3)	110236 (1)
	222645	Single add-on fluid module	196471 (1)	–

Lubricant Dispense Consoles Accessories

	Part Number	Description
	110236	Water bib bracket
	110237	Dispense valve bracket for XD meters
	110285	Pistol-grip dispense valve bracket
	196471	Dispense valve bracket for LDP5, EM8 and EM20 meters
	249440	Dispense valve bracket for SD/Matrix meters

Ordering Information

Oil Dispense Bar

	Part Number	Description
	220107	Modular oil dispense bar supports up to 3 dispense taps (1 included) and optional meters. Add up to two additional dispense valves with tap kit 220112.

Accessories for Oil Dispense Bar

	Part Number	Description
	220112	Dispenser valve kit for adding dispense valves to modular oil dispense bar.
	239706	Meter kit for adding IM5 electronic totalizing meter to dispense valve. Reads in gallons, quarts, pints and liters.

Notes

GREASE PUMPS

Page

Grease Pump Selection Guide 108-109
LD Series™ Grease Pumps. 110-114
LD Series™ Grease Pump Accessories . . 115-116
Mini Fire-Ball® 225 Grease Pumps 117-120
Fire-Ball® 300 Grease Pumps 121-128
Fire-Ball® 425 Grease Pumps 129-135
Grease Pump Accessories 136-139
GT 750 36:1 Grease Pumps. 140-141
NXT™ Check-Mate® Grease Pumps 142-146
Dyna-Star® Hydraulic Grease Pumps . . . 147-148
Viscount® II Grease Pumps 149-150
Manually-Operated Grease Pumps. 151

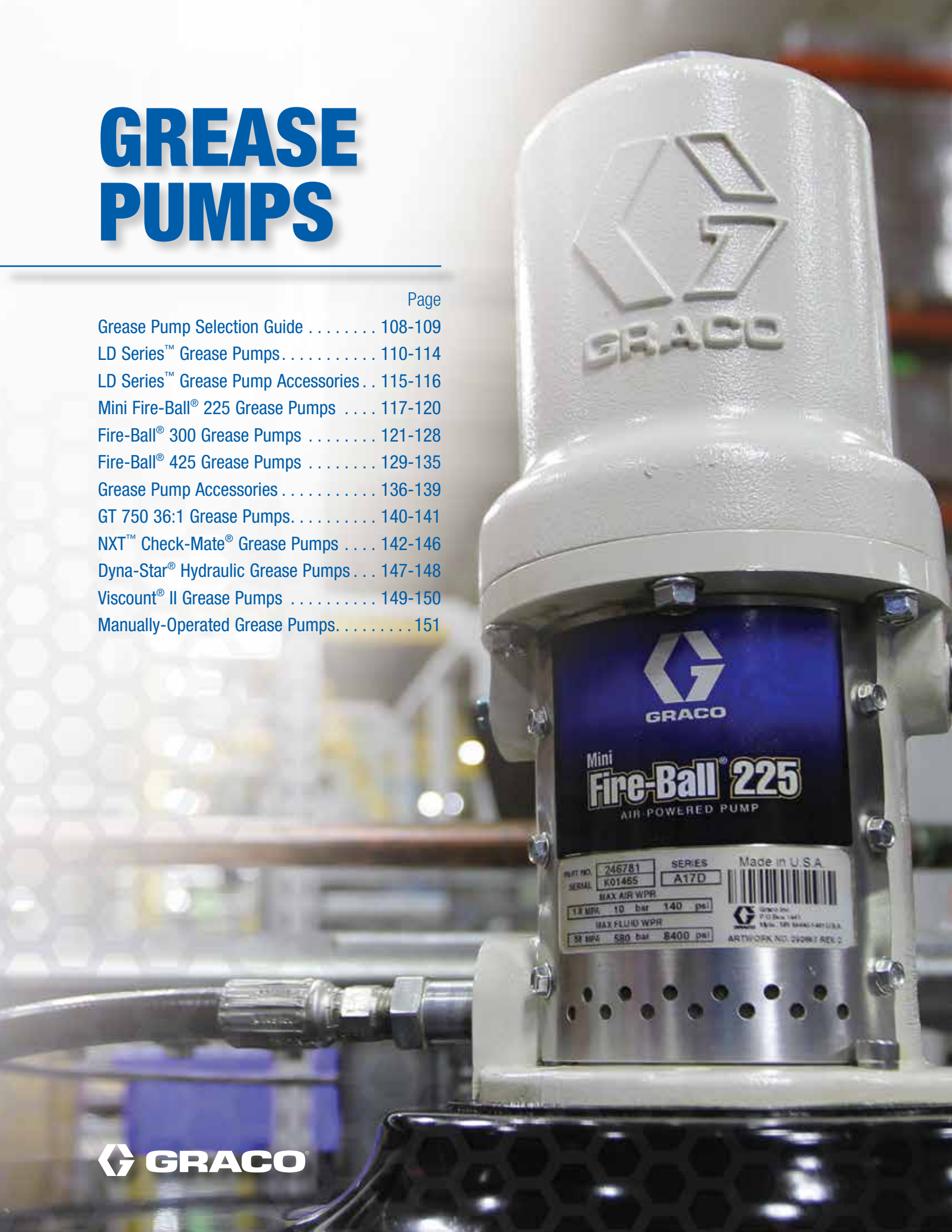

GRACO

Grease Pump Selection Guide

Pump Family and Fluid Pressure Ratio	Typical Applications	Annual Usage	Line Length	Simultaneous Dispense Points	Approx. Free Flow Rate @ 100 psi	Air Inlet	Fluid Outlet	Air Operation Range	Reference Page
LD, 50:1	• Automotive dealerships • Fast lube centers • Lube trucks • Lubricant transfer • Service shops	Up to 7,000 lbs (3,175 kg)	Up to 100 (30.5 m)	1	4.5 lbs/min (2 kg/min)	1/4 in NPT(F)	1/4 in NPT(F)	20-150 psi (1.37-10.3 bar)	110-116
Mini Fire-Ball 225, 50:1	• Automotive dealerships • Fast lube centers • Fleet service facilities • Heavy-duty dealerships • In-plant • Lube trucks • Lubricant transfer • Mining • Service shops	Up to 10,000 lbs (4,535 kg)	Up to 100 (30.5 m)	1	1.5 lbs/min (0.7 kg/min)	3/8 in NPT(F)	1/4 in NPT(F)	40-140 psi (2.8-10 bar)	117-120 135-138
Fire-Ball 300, 15:1	• Automotive dealerships • Fast lube centers • Fleet service facilities • Heavy-duty dealerships • In-plant • Lube trucks • Lubricant transfer • Mining • Service shops	Up to 10,000 lbs (4,535 kg)	Up to 250 ft (76 m)	1-2	7.5 lbs/min (3.4 kg/min)	3/8 in NPT(F)	1/4 in NPT(F)	40-180 psi (2.8-12.5 bar)	121-123 135-138
Fire-Ball 300, 50:1	• Automotive dealerships • Fast lube centers • Fleet service facilities • Heavy-duty dealerships • In-plant • Lube trucks • Lubricant transfer • Mining • Service shops	Up to 10,000 lbs (4,535 kg)	Up to 250 ft (76 m)	1-2	7.5 lbs/min (3.4 kg/min)	3/8 in NPT(F)	1/4 in NPT(F)	30-140 psi (2.1-9.7 bar)	121-132 124-128 135-138
Fireball 425, 10:1	• Automotive dealerships • Fast lube centers • Fleet service facilities • Heavy-duty dealerships • In-plant • Lube trucks • Lubricant transfer • Mining • Service shops	> 20,000 lbs (9,072 kg)	Up to 500 ft (152 m)	4 or more	29 lbs/min (13.1 kg/min)	1/2 in NPT(F)	1 in NPT(F)	40-180 psi (2.8-12.5 bar)	129-130 136-139
Fire-Ball 425, 50:1	• Automotive dealerships • Fast lube centers • Fleet service facilities • Heavy-duty dealerships • In-plant • Lube trucks • Lubricant transfer • Mining • Service shops	> 20,000 lbs (9,072 kg)	Up to 250 ft (76 m)	4 or more	9 lbs/min (4.1 kg/min)	1/2 in NPT(F)	3/8 in NPT(F)	40-150 psi (2.8-10.3 bar)	129-131 133-139
Fire-Ball 425, 75:1	• Automotive dealerships • Fast lube centers • Fleet service facilities • Heavy-duty dealerships • In-plant • Lube trucks • Lubricant transfer • Mining • Service shops	> 20,000 lbs (9,072 kg)	Up to 500 ft (152 m)	4 or more	6.5 lbs/min (2.9 kg/min)	1/2 in NPT(F)	3/8 in NPT(F)	40-100psi (2.8-7 bar)	129-130 132-139
GT 750, 36:1	• Fleet service facilities • Heavy-duty dealerships • In-plant • Lube trucks • Mining	> 20,000 lbs (9,072 kg)	Up to 250 ft (76 m)	4 or more	32 lbs/min (14.5 kg/min)	1/2 in NPT(F)	1 in NPT(F)	40-100psi (2.8-7 bar)	140-141

Pump Family and Fluid Pressure Ratio	Typical Applications	Annual Usage	Air Inlet	Fluid Outlet	Air Operation Range	Reference Page
Check-Mate 14:1	• Fleet service facilities • In-plant large runs • Large volume lubricant transfer • Mining remote fill	> 20,000 lbs (9,072 kg)	3/4 in NPT(F)	1-1/2 in NPT(M)	0-100 psi (0-7 bar)	142-143 145-146
Check-Mate 26:1	• Fleet service facilities • In-plant large runs • Large volume lubricant transfer • Mining remote fill	> 20,000 lbs (9,072 kg)	3/4 NPT(F)	1-1/2 in NPT(M)	0-100 psi (0-7 bar)	142-143 146
Check-Mate 29:1	• Fleet service facilities • In-plant large runs • Large volume lubricant transfer • Mining remote fill	> 20,000 lbs (9,072 kg)	3/4 NPT(F)	1 in NPT(F)	0-100 psi (0-7 bar)	142-143 146
Check-Mate 55:1	• Fleet service facilities • In-plant large runs • Large volume lubricant transfer • Mining remote fill	> 20,000 lbs (9,072 kg)	3/4 NPT(F)	1 in NPT(F)	0-100 psi (0-7 bar)	142 144-146
Check-Mate 63:1	• Fleet service facilities • In-plant large runs • Large volume lubricant transfer • Mining remote fill	> 20,000 lbs (9,072 kg)	3/4 NPT(F)	3/4 in NPT(M)	0-72 psi (0-4.9 bar)	142 144-146
Check-Mate 68:1	• Fleet service facilities • In-plant large runs • Large volume lubricant transfer • Mining remote fill	> 20,000 lbs (9,072 kg)	3/4 NPT(F)	1 in NPT(F)	0-78 psi (0-5.4 bar)	142 144-146

Pump Family and Fluid Pressure Ratio	Typical Applications	Maximum Grease Output Flow Rate	Maximum Grease Output Pressure	Hydraulic Inlet (Supply)	Hydraulic Outlet (Return)	Grease Outlet	Maximum Hydraulic Inlet Pressure	Reference Page
Dyna-Star 5:1	• Fleet service facilities • Heavy-duty dealerships • In-plant • Lube trucks • Lubricant transfer • Mining • Service shops	4 lb/min (1.8 kg/min)	7500 psi (517 bar)	3/8 in NPT(F)	3/4 in NPT(F)	1/2 in NPT(F)	1500 psi (102 bar)	147-148
Dyna-Star 10:1	• Fleet service facilities • Heavy-duty dealerships • In-plant • Lube trucks • Lubricant transfer • Mining • Service shops	1.1 lb/min (0.5 kg/min)	7500 psi (517 bar)	3/4 in -16 JIC (37° Flare)	3/4 in NPT(F)	1/2 in NPT(F)	600 psi (41 bar)	147-148
Viscount II 2.4:1	• Fleet service facilities • Heavy-duty dealerships • In-plant • Lube trucks • Lubricant transfer • Mining • Service shops	54 lb/min (20.4 kg/min)	2300 psi (159 bar)	3/4 in NPT(F)	1 in NPT(F)	1-1/2 in NPT(F)	1500 psi (102 bar)	149-150

LD Series™ 50:1 Grease Pumps

Grease

5 Year Warranty!

Durable and hardworking

Stay ahead of the competition with LD Series pumps. These affordable and full-featured pumps are designed for lower-volume (up to 7,000 lb/year) applications. LD pumps are fine-tuned for a compact, flexible and durable solution.

Three-Inch Air Motor

Provides more power to create better flow.

Engineered for Durability

Patented cup and plate design eliminates the need for O-rings that wear out faster, for a more durable, longer-lasting solution.

Modular Air Valve

Air inlet and exhaust locations are easy to configure with just four bolts for simple, hassle-free installations.

Pilot Valves

Patented self- cleaning design increases reliability in dirty air environments and minimizes pressure drop with rapid changeovers for reduced stalling and smoother flow.

Typical Applications

- Automotive dealerships
- Fast lube centers
- Service shops
- Lube trucks

Typical Fluids Handled

- Grease up to NLGI #2

Pump Performance

LD Series 50:1 Pumps

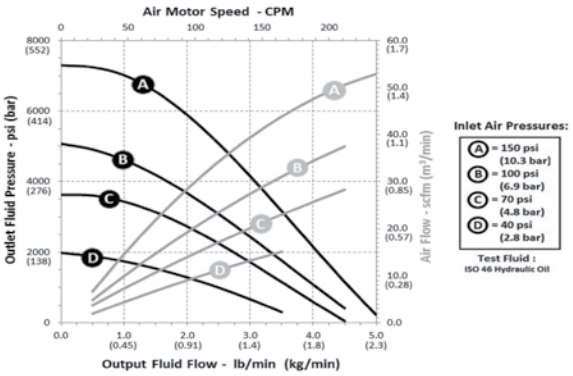

Technical Specifications

Fluid Pressure Ratio	50:1
Air Motor Effective Diameter	3 in (76.2 mm)
Annual Usage	Up to 7,000 lb (3,175 kg)
Maximum Fluid Working Pressure	7,500 psi (517 bar / 51.7 MPa)
Approximate Free Flow Rate @ 100 psi	4.5 lb/min (2 kg/min)
Output per Cycle	0.34 oz (9.7 g)
Approximate Air Use and Flow @ 100 psi (80 cpm)	16 @ 1.7 lb/min (0.45 @ 0.77 kg/min)
Air Inlet	1/4 in NPT(F)
Fluid Outlet	1/4 in NPT(F)
Air Operation Range	20 psi to 150 psi (1.37 bar to 10.3 bar)
Max Recommended Pump Speed	120 cpm
Cycles per Pound (Kg)	47 cpp (103 cpk)
Wetted Parts	Steel, brass, nitrile rubber, polyurethane, UHMWPE, acetal
Sound Pressure Level	72.9 dB(A)
Sound Power Level	82 dB(A)
Approximate Weight	35 lb drum – 11.2 lb (5.1 kg) 120 lb drum – 15.0 lb (6.8 kg) 400 lb drum – 17.0 lb (7.7 kg)
Instruction Manual	3A1334

Ordering Information

LD Series 50:1 Pumps

Part Number	Description
24G600	For 35 lb (16 kg) pail
24G603	For 120 lb (55 kg) drum
24G606	For 400 lb (180 kg) drum

Ordering Information

35 lb Grease Packages

Package Number	24J030	26C169	25C549
Ratio	50:1	50:1	50:1
Type of Package	Stationary	Stationary	Mobile
Container Size	35 lb (16 kg)	35 lb (16 kg)	35 lb (16 kg)
Pump Part Number	24G600	24G600	24G600
Hose Kit	24H862	–	24H862
Hose Sizes	Grease 1/4 in ID x 6 ft (1.8 m) Air/Water 3/8 in ID x 6 ft (1.8 m)	Grease – Whip 1/8 in x 1/8 in x 30 in (0.8 m) Grease 1/4 in x 3/8 in x 20 ft (6.1 m)	Grease 1/4 in ID x 6 ft (1.8 m) Air/Water 3/8 in ID x 6 ft (1.8 m)
Follower Plate	24F901	24F901	24F901
Drum Cover	24F904	24F904	24F904
Grease Valve	129581	129581	129581
Z-Swivel	129591	129591	129591
Fitting(s)	–	157705	–
Air Regulator	–	24H420	–
Air Filter	–	106148	–
Portable Base	–	–	131183
Instruction Manual	3A1335	3A1335	3A1335

Ordering Information

120 lb Grease Packages

Package Number	24J036	26C170	25C548	24J048	24J060	25N618
Ratio	50:1	50:1	50:1	50:1	50:1	50:1
Type of Package	Stationary	Stationary	Mobile	Mobile	Mobile	Mobile
Container Size	120 lb (54 kg)	120 lb (54 kg)	120 lb (54 kg)	120 lb (54 kg)	120 lb (54 kg)	120 lb (54 kg)
Pump Part Number	24G603	24G603	24G603	24G603	24G603	24G603
Hose Kit	24H862	–	24H862	24H862	24J501	–
Hose Sizes	Grease 1/4 in ID x 6 ft (1.8 m) Air/Water 3/8 in ID x 6 ft (1.8 m)	Grease – Whip 1/8 in x 1/8 in x 30 in (0.8 m) Grease 1/4 in x 3/8 in x 20 ft (6.1 m)	Grease 1/4 in ID x 6 ft (1.8 m) Air/Water 3/8 in ID x 6 ft (1.8 m)	Grease 1/4 in ID x 6 ft (1.8 m) Air/Water 3/8 in ID x 6 ft (1.8 m)	Grease 1/4 in ID x 6 ft (1.8 m) Air/Water 3/8 in ID x 6 ft (1.8 m)	Grease 1/4 in ID x 12 ft (3.7 m)
Follower Plate	24F902	24F902	24F902	24F902	24F902	24F902
Drum Cover	24F905	24F905	24F905	24F905	24F905	24F905
Grease Valve	129581	129581	129581	129581	129581	129581
Z-Swivel	129591	129591	129591	129591	129591	129591
Fitting(s)	–	157705	–	–	–	165198 / 169970
Air Regulator	–	24H420	–	–	–	24H420
Air Filter	–	106148	–	–	–	–
Portable Base	–	–	131184	24H422	24H422	131184
Hose Reel	–	–	–	–	LD	–
Hose Size	–	–	–	–	1/4 in x 35 ft	–
Hose Reel Part Number	–	–	–	–	24H663	–
Instruction Manual	3A1335	3A1335	3A1335	3A1335	3A1335	3A1335

LD Series 50:1 Grease Pump Packages

Ordering Information

400 lb Grease Packages

Package Number	24J042	26C171	24J054	24J066
Ratio	50:1	50:1	50:1	50:1
Type of Package	Stationary	Stationary	Mobile	Mobile
Container Size	400 lb (180 kg)	400 lb (180 kg)	400 lb (180 kg)	400 lb (180 kg)
Pump Part Number	24G606	24G606	24G606	24G606
Hose Kit	24H862	–	24H862	24J501
Hose Sizes	Grease 1/4 in ID x 6 ft (1.8 m) Air/Water 3/8 in ID x 6 ft (1.8 m)	Grease – Whip 1/8 in x 1/8 in x 30 in (0.8 m) Grease 1/4 in x 3/8 in x 20 ft (6.1 m)	Grease 1/4 in ID x 6 ft (1.8 m) Air/Water 3/8 in ID x 6 ft (1.8 m)	Grease 1/4 in ID x 6 ft (1.8 m) Air/Water 3/8 in ID x 6 ft (1.8 m)
Follower Plate	24F903	24F902	24F903	24F903
Drum Cover	24F906	24F905	24F906	24F906
Grease Valve	129581	129581	129581	129581
Z-Swivel	129591	129591	129591	129591
Fitting(s)	–	157705	–	–
Air Regulator	–	24H420	–	–
Air Filter	–	106148	–	–
Type of Reel	–	–	–	LD
Reel Size	–	–	–	1/4 in x 35 ft
Reel Part Number	–	–	–	24H663
Portable Base	–	–	24F915	24F915
Instruction Manual	3A1335	3A1335	3A1335	3A1335

LD Pro-Shot™ Non-Metered Grease Valves

- Rugged design for harsh environments
- Pressure-assisted trigger for ease of operation
- Easy adjustment with top locking nut
- 6 in steel extension with heavy-duty coupler

Technical Specifications

Pressure	7,500 psi (517 bar / 51.7 MPa)
Wetted Parts	Steel, nitrile rubber, PTFE
Inlet Size	1/4 in

Ordering Information

Part Number	Description
129581	LD Pro Shot Grease Valve, 1/4 in NPT

LD Z-Swivel

- Swivels to prevent twist damage to hoses
- Constructed of heavy-duty steel and ball bearings for smooth and unrestricted movement

Technical Specifications

Pressure	6,000 psi (413 bar / 41.3 MPa)
Inlet Size	1/4 in

Ordering Information

Part Number	Description
129591	Z-swivel, 1/4 in NPT

Ordering Information

Adjustable Bung Adapter

Part Number	Description
24P623	Adjustable bung adapter for LD pumps

Air Regulators

Part Number	Description
24H420	Mini self-relieving air regulator with gauge, 1/4 in NPT x 3/8 in npsm

Carts

Part Number	Description
24H422	Drum cart with pneumatic wheels for 120 lb drums; includes chain for securing drum to cart
24F915	Drum cart with pneumatic wheels for 400 lb drums; includes chain for securing drum to cart

Drum Covers

Part Number	Description
24F904	Cover for 35 lb (16 kg) pails
24F905	Cover for open-head 120 lb (54 kg) drums
24F906	Cover for open-head 400 lb (182 kg) drums

LD Drum Dollies

Part Number	Description
131183	Drum Dolly, 35 lb (16 kg)
131184	Drum Dolly, 120 lb (54 kg)
129645	Drum Dolly, 400 lb (182 kg)

Follower Plates

Part Number	Description
24F901	Follower plate for 35 lb (16 kg) pails
24F902	Follower plate for 120 lb (54 kg) drums
24F903	Follower plate for 400 lb (182 kg) drums

Hose and Fitting Kits

	Part Number	Description	Includes				
			Grease Hose	Grease Hose Size	Air Hose	Air Hose Size	Fitting
	24H862	6 ft LD grease pump hose kit	24H606	1/4 in NPT(M) x 1/4 in NPT(M) x 6 ft	24H858	3/8 in x 6 ft	156823
	24J501	6 ft LD grease pump hose kit	24J487	1/4 in NPT(M) x 1/4 in NPT(M) (with 90º swivel) x 6 ft	24H858	3/8 in x 6 ft	156823

7 Year Warranty!

Perfect for Medium Pressure, Low Volume Applications

You can't afford downtime, especially when your shop is small. The Mini Fire-Ball 225 is designed with fewer moving parts, which means less wear and tear and reduced downtime, allowing you to run a more profitable business.

Durable Casting

Thick cast aluminum air motor housing offers unmatched durability.

Fewer Repairs

Fewer moving parts in the air motor assembly means less downtime and low repair cost.

Extended Seal Life

In-line pump design aligns the air motor piston and fluid piston rods to maximize seal life.

Superior Sealing

Non-metallic poppet valves offer positive sealing performance, even with contaminated "dirty" air environments for long-life without repair.

Corrosion-Resistant

Corrosion-resistant design utilizes liquid salt nitriding, nickel plating, stainless steel, aluminum and chrome on key components for longer life.

Typical Applications

- Automotive dealerships
- Fast lube centers
- Service shops
- Heavy-duty dealerships
- Fleet services facilities
- In-plant
- Lube trucks
- Mining

Typical Fluids Handled

- Grease up to NLGI #2

Pump Performance

Mini Fire-Ball 225 Pumps

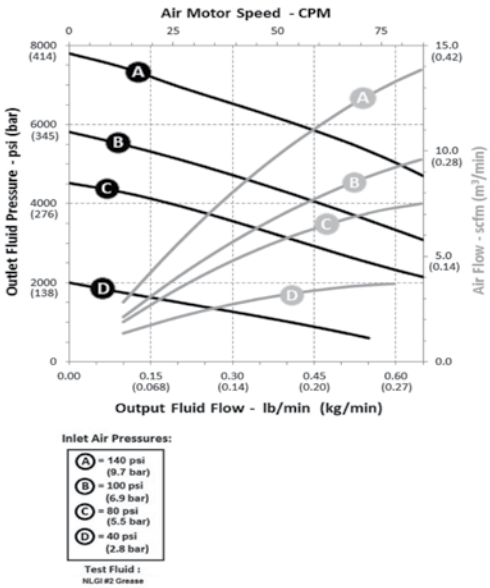

Mini Fire-Ball® 225 Grease Pumps

Technical Specifications

Fluid Pressure Ratio	50:1
Air Motor Effective Diameter	2.25 in (57.2 mm)
Annual Usage	Up to 10,000 lb (4,535 kg)
Maximum Fluid Working Pressure	8,400 psi (578 bar / 57.8 MPa)
Approximate Free Flow Rate @ 100 psi	1.5 lb/min (0.7 kg/min)
Output per Cycle	0.12 oz (3.5 g)
Continuous Duty Flow Rate	0.32 lb/min (0.15 kg/min)
Approximate Air Use and Flow @ 100 psi (80 cpm)	9.3 @ 0.62 lb/min (0.26 @ 0.28 kg/min)
Air Inlet	3/8 in NPT(F)
Fluid Outlet	1/4 in NPT(F)
Air Operation Range	40 psi to 140 psi (3 bar to 10 bar)
Max Recommended Pump Speed	100 cpm
Cycles per Pound (Kg)	130 cpp (287 cpk)
Wetted Parts	Carbon steel, zinc plating, brass, polyurethane, ultra-high molecular weight polyethylene, Buna-N
Sound Pressure Level	77.8 dB(A)
Sound Power Level	85.6 dB(A)
Approximate Weight	15 lb (6.8 kg)
Instruction Manual	309966

Ordering Information

Mini Fire-Ball 50:1 Pumps

Part Number	Description
246909	For 35 lb (16 kg) pail
253361	For 35 lb (16 kg) pail, without handle
246780	For 120 lb (55 kg) drum
246781	For 400 lb (180 kg) drum

Mini Fire-Ball® 225 Grease Pump Packages

Ordering Information

35 lb and 50 lb Grease Packages

Package Number		246910*	246911*	246913*
Ratio		50:1	50:1	50:1
Type of Package		Portable pail dispenser	Stationary pail dispenser	Cart-mounted pail dispenser
Container Size		35 lb to 50 lb (16 kg to 23 kg)	35 lb to 50 lb (16 kg to 23 kg)	35 lb to 50 lb (16 kg to 23 kg)
Container		–	204134	204134
Pump Part Number		246909	246909	246909
Fluid Hose Size		1/4 in x 12 ft	1/4 in x 12 ft	1/4 in x 12 ft
Dispense Hose Kit		236058	236058	236058
Dispense Kit Includes	12 ft Hose	109151	109151	109151
	Air Coupler	114558	114558	114558
	Air Fitting	169971	169971	169971
	Z-Swivel	202577	202577	202577
	Pro-Shot Valve	242056	242056	242056
Follower Plate		24F901	**	**
Drum Cover		222059	24R350	24R350
Portable Base		–	–	203650
Instruction Manual		309967	309967	309967

*Use 3/8 in (9.5 mm) air regulator (109075); must be ordered separately.
**Order follower plate (220653) separately for 35 lb (16 kg) pails or (220654) for 70 lb (32 kg) bulk.

246911

Ordering Information

120 lb and 400 lb Grease Packages

Package Number		246914*	246915*	246916*	246917*
Ratio		50:1	50:1	50:1	50:1
Type of Package		Stationary supply package	Portable package with caster base	Portable package with 2-wheel cart	Stationary supply package
Container Size		120 lb (55 kg)	120 lb (55 kg)	120 lb (55 kg)	400 lb (180 kg)
Pump Part Number		246780	246780	246780	246781
Fluid Hose Size		1/4 in x 6 ft	1/4 in x 12 ft	1/4 in x 12 ft	1/4 in x 6 ft
Dispense Hose Kit		222072	236058	236058	222072
Dispense Kit Includes	12 ft Hose	–	109151	109151	–
	6 ft Hose	109150	–	–	109150
	6 ft Coupled Hose	203320	–	–	203320
	Air Coupler	–	114558	114558	–
	Air Fitting	–	169971	169971	–
	Z-Swivel	–	202577	202577	–
	90º Fitting(s)	155494 / 155541	–	–	155494 / 155541
	Pro-Shot Valve	–	242056	242056	–
Follower Plate		24F902	24F902	24F902	24F903
Drum Cover		24R350	24R350	24R350	200326
Portable Base		–	203622	203650	–
Instruction Manual		309967	309967	309967	309967

*Use 3/8 in (9.5 mm) air regulator (109075); must be ordered separately.

7 Year Warranty!

Ideal for Shops with Grease Transfer

Install the Fire-Ball 300 in grease dispense applications. A differential air motor ensures smooth the double-acting pump design provides reliable grease flow and accurate dispense.

Durable

Thick cast aluminum air motor housing offers unmatched durability.

Fewer Repairs

Fewer moving parts in the air motor assembly means less downtime and low repair cost.

Extended Seal Life

In-line pump design aligns the air motor piston and fluid piston rods to maximize seal life.

Superior Sealing

Non-metallic poppet valves offer positive sealing performance, even with contaminated “dirty” air environments for long life without repair.

Corrosion-Resistant

Corrosion-resistant design utilizes liquid salt nitriding, nickel plating, stainless steel, aluminum and chrome on key components for longer life.

Typical Applications

- Automotive dealerships
- Fast lube centers
- Service shops
- Heavy-duty dealerships
- Fleet services facilities
- In-plant
- Lube trucks
- Mining

Typical Fluids Handled

- Grease up to NLGI #2

Pump Performance

Fire-Ball 300 15:1 Pumps

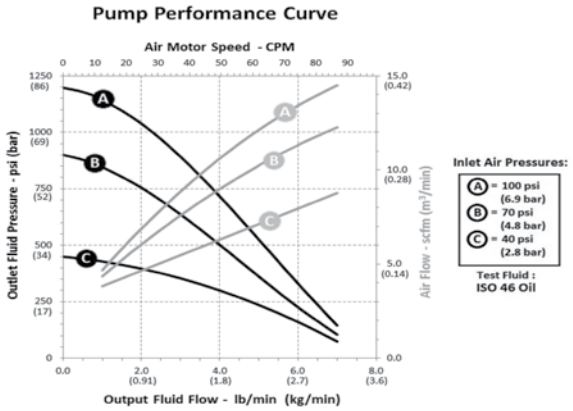

Fire-Ball 300 50:1 Pumps

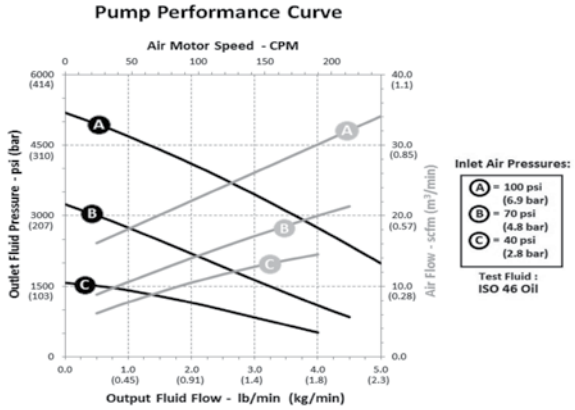

Technical Specifications

	Fire-Ball 300 15:1	Fire-Ball 300 50:1
Fluid Pressure Ratio	15:1	50:1
Air Motor Effective Diameter	3 in (76.2 mm)	3 in (76.2 mm)
Annual Usage	Up to 10,000 lb (4,535 kg)	Up to 10,000 lb (4,535 kg)
Maximum Fluid Working Pressure	2,700 psi (186 bar / 18.6 MPa)	8,400 psi (579 bar / 57.9 MPa)
Approximate Free Flow Rate @ 100 psi	7.5 lb/min (3.4 kg/min)	7.5 lb/min (3.4 kg/min)
Output per Cycle	1.29 oz (36.6 g)	0.34 oz (9.5 g)
Continuous Duty Flow Rate	0.7 lb/min (0.32 kg/min)	1.19 lb/min (0.54 kg/min)
Approximate Air Use and Flow @ 100 psi (80 cpm)	14 @ 6.5 lb/min (0.40 @ 2.9 kg/min)	21 @ 1.7 lb/min (0.59 @ 0.77 kg/min)
Air Inlet	3/8 in NPT(F)	3/8 in NPT(F)
Fluid Outlet	1/4 in NPT(F)	1/4 in NPT(F)
Air Operation Range	40 psi to 180 psi (2.8 bar to 12.5 bar)	30 psi to 140 psi (3.0 bar to 9.7 bar)
Max Recommended Pump Speed	66 cpm	76 cpm
Cycles per Pound (Kg)	12.4 cpp (27 cpk)	47.4 cpp (105 cpk)
Wetted Parts	Carbon steel, brass, copper, aluminum, PTFE, nitrile rubber, leather	Steel, brass, aluminum, acetal, nitrile rubber, polyurethane
Sound Pressure Level	77.8 dB(A)	77.8 dB(A)
Sound Power Level	85.6 dB(A)	85.6 dB(A)
Approximate Weight	22 lb (10 kg)	22 lb (10 kg)
Instruction Manual	306531	308883

Ordering Information

Fire-Ball 300 Grease Pumps

Part Number	Ratio	Description
206405	15:1	For 35 lb (16 kg) pail
206699	15:1	For 120 lb (55 kg) drum
206700	15:1	For 400 lb (180 kg) drum
239877	50:1	For 35 lb or 70 lb (16 kg or 32 kg) pail
239887	50:1	For 120 lb (55 kg) drum
239888	50:1	For 400 lb (180 kg) drum

Ordering Information

15:1 Grease Pump Packages

Package Number		222078	220170	220171
Type of Package		Stationary Pail Dispenser	Stationary Drum Dispenser	Cover-Mounted Drum Dispenser
Ratio		15:1	15:1	15:1
Container Size		35 lb (16 kg)	120 lb (55 kg)	400 lb (180 kg)
Pump Part Number		206405	206699	206700
Dispense Kit		222080	222081	222081
Dispense Kit Includes	Fluid Hose	1/4 in x 15 ft	1/4 in x 25 ft	1/4 in x 25 ft
	Hose Part Number	109165	109167	109167
	Air Coupler	110198	110198	110198
	Air Fitting	–	169971	169971
	Closed Nipple	156849	156849	156849
	Z-Swivel	202577	202577	202577
	Fitting(s)	169971	–	–
	Dispenser	Pro-Shot	Pro-Shot	Pro-Shot
	Dispenser Part Number	242056	242056	242056
	Air Regulator	110234	110234	110234
	Air Pressure Gauge	100960	100960	100960
Drum Cover		222058	204574	200326
Instruction Manual		307882	307882	307882

Ordering Information

50:1 25 to 50 lb Grease Pump Packages

Package Number		222069*	245694*	225827*	225773*	245695*	226012*
Type of Package		Portable pail dispenser	Portable pail dispenser	Stationary pail dispenser	Cart-mounted pail dispenser	Cart-mounted pail dispenser	Cart-mounted pail topper
Ratio		50:1	50:1	50:1	50:1	50:1	50:1
Container Size		25 lb to 50 lb (11 kb to 23 kg)	25 lb to 50 lb (11 kb to 23 kg)	35 lb to 50 lb (16 kg to 23 kg)	35 lb to 50 lb (16 kg to 23 kg)	35 lb to 50 lb (16 kg to 23 kg)	50 lb (23 kg)
Pump Part Number		239877	239877	239877	239877	239877	239877
Dispense Kit		222070	245697	222070	222070	245697	222070
Dispense Kit Includes	Fluid Hose	1/4 in x 12 ft	1/4 in x 12 ft	1/4 in x 12 ft	1/4 in x 12 ft	1/4 in x 12 ft	1/4 in x 12 ft
	Hose Part Number	109151	109151	109151	109151	109151	109151
	Air Coupler	114558	114558	114558	114558	114558	114558
	Air Fitting	169971	169971	169971	169971	169971	169971
	Z-Swivel	202577	202577	202577	202577	202577	202577
	Dispenser	Pro-Shot	Accu-Shot	Pro-Shot	Pro-Shot	Accu-Shot	Pro-Shot
	Dispenser Part Number	242056	233807	242056	242056	233807	242056
Follower Plate		24F901	220653	**	**	**	–
Drum Cover		222059	222059	24R350	24R350	204574	–
Holster		–	–	203976	203976	203976	203976
Container		–	–	204134	204134	204134	–
Portable Base		–	–	–	203650	203650	203650
Elevator		–	–	–	–	–	203664
Inductor Plate		–	–	–	–	–	204351
Instruction Manual		307878	307878	307878	307878	307878	307878

*Use 3/8 in (9.5 mm) air regulator (109075); must be ordered separately.
**Order follower plate 220654 separately, if needed.

Ordering Information

50:1 120 lb Grease Pump Packages

Package Number		225006*	225026*	26C185*	26C186*	245696*	222245*
Type of Package		Portable with caster base	Portable with 2-wheel cart	Portable with caster base	Portable with 2-wheel cart	Portable with 2-wheel cart	Portable with heavy duty cart
Ratio		50:1	50:1	50:1	50:1	50:1	50:1
Container Size		120 lb (55 kg)	120 lb (55 kg)	120 lb (55 kg)	120 lb (55 kg)	120 lb (55 kg)	120 lb (55 kg)
Pump Part Number		239887	239887	239887	239887	239887	239887
Dispense Kits		222070	222070	26C183	26C183	245697	222383
Dispense Kit Includes	Fluid Hose	1/4 in x 12 ft	1/4 in x 12 ft	1/4 in x 12 ft	1/4 in x 12 ft	1/4 in x 12 ft	1/4 in x 25 ft
	Hose Part Number	109151	109151	109151	109151	109151	109154
	6 ft Coupled Hose	–	–	–	–	–	–
	Air Coupler	114558	114558	114558	114558	114558	114558
	Air Fitting	169971	169971	169971	169971	169971	169971
	Z-swivel	202577	202577	202577	202577	202577	202577
	Fitting(s)	–	–	–	–	–	–
	Dispenser	Pro-Shot	Pro-Shot	Pro-Shot	Pro-Shot	Accu-Shot	Pro-Shot
	Dispenser Part Number	242056	242056	26C184	26C184	233807	242056
Fluid Hose Size		See kit above	See kit above	See kit above	See kit above	See kit above	See kit above
Air Hose Size		–	–	–	–	–	–
Meter		See kit above	See kit above	See kit above	See kit above	See kit above	See kit above
Meter Part Number		See kit above	See kit above	See kit above	See kit above	See kit above	See kit above
Follower Plate		24F902	24F902	24F902	24F902	220654	24F902
Drum Cover		24R350	24R350	24R350	24R350	204574	222060
Holster		203976	203976	203976	203976	203976	–
Portable Base		203622	203650	203622	203650	203650	222243
Elevator		–	–	–	–	–	–
Pump Support		–	–	–	–	–	–
Hold Down Kit		–	–	–	–	–	222061
Instruction Manual		307878	307878	307878	307878	307878	307878

*Use 3/8 in (9.5 mm) air regulator (109075); must be ordered separately.

Ordering Information

50:1 120 lb Grease Pump Packages (Cont.)

Package Number		225014*	222073*
Type of Package		Stationary supply	Stationary supply topper-inductor
Ratio		50:1	50:1
Container Size		120 lb (55 kg)	120 lb (55 kg)
Pump Part Number		239887	239887
Dispense Kits		222072	–
Dispense Kit Includes	Fluid Hose	1/4 in x 6 ft	–
	Hose Part Number	109150	–
	6 ft Coupled Hose	203320	–
	Air Coupler	–	–
	Air Fitting	–	–
	Z-swivel	–	–
	Fitting(s)	155494/155541	–
	Dispenser	–	–
	Dispenser Part Number	–	–
Fluid Hose Size		See kit above	–
Air Hose Size		See kit above	–
Follower Plate		24F902	–
Drum Cover		24R350	–
Holster		–	–
Portable Base		–	–
Elevator		–	204121
Pump Support		–	222074
Hold Down Kit		–	–
Instruction Manual		307880	306523

*Use 3/8 in (9.5 mm) air regulator (109075); must be ordered separately.

50:1 400 lb Grease Pump Packages

Package Number		225016*	226013*
Type of Package		Stationary supply	Stationary supply topper-inductor
Ratio		50:1	50:1
Container Size		400 lb (180 kg)	400 lb (180 kg)
Pump Part Number		239888	239888
Hose and Fitting Kits		222072	204467
Dispense Kit Includes	Fluid Hose	1/4 in x 6 ft	1/4 in x 6 ft
	Hose Part Number	109150	109150
	6 ft Coupled Hose	203320	–
	Fitting(s)	155494/155541	100206/156971/205528
Air Hose Size		3/8 in x 6 ft	3/8 in x 6 ft
Follower Plate		24F903	–
Drum Cover		200326	–
Elevator		–	204385
Pump Support		–	204461
Inductor Plate		–	204353
Base		–	205339
Instruction Manual		307880	306556

*Use 3/8 in (9.5 mm) air regulator (109075); must be ordered separately.

Ordering Information

50:1 Grease Pump Lube Truck Packages

Package Number		222085*	222071*
Type of Package		Lube truck	Lube truck
Ratio		50:1	50:1
Container Size		120 lb (55 kg)	400 lb (180 kg)
Pump Part Number		239887	239888
Dispense Kits		222072	222072
Dispense Kit Includes	Fluid Hose	1/4 in x 6 ft	1/4 in x 6 ft
	Hose Part Number	109150	109150
	6 ft Coupled Hose	203320	203320
	Fitting(s)	155494/155541	155494/155541
Air Hose Size		3/8 in x 6 ft	3/8 in x 6 ft
Follower Plate		220654	223845
Drum Cover		222060	207366
Hold Down Kit		222061	207361
Instruction Manual		307880	307880

*Use 3/8 in (9.5 mm) air regulator (109075); must be ordered separately.

Ordering Information

50:1 Grease Pump Side Pocket and Horizontal Mount Packages

Package Number		244644	244645
Type of Package		Side Pocket Mount	Horizontal Mount
Ratio		50:1	50:1
Pump Part Number		239888	239877
Dispense Kits		222072	222072
Dispense Kit Includes	Fluid Hose	1/4 in x 6 ft	1/4 in x 6 ft
	Hose Part Number	109150	109150
	6 ft Coupled Hose	203320	203320
	Fitting(s)	155494/155541	155494/155541
Air Hose Size		3/8 in x 6 ft	3/8 in x 6 ft
Pump Mount Bracket		3 in (f) Coupler – 512874	3 in (f) Coupler – 512874
Air Regulator		109075	109075
Air Shut-Off Valve		110224	110224
Installation Kit		948393	948393
Instruction Manual		309350	309350

10 Year Warranty!

The Pump of Choice for Your Most Demanding Applications!

The Fire-Ball 425 features a large air motor to supply the power you need for long pipe runs and higher-volume dispensing. An ideal choice for applications where multiple dispenses happen at the same time.

Durable Casting

Thick cast aluminum air motor housing offers unmatched durability.

Fewer Repairs

Fewer moving parts in the air motor assembly means less downtime and low repair cost.

Extended Seal Life

In-line pump design aligns the air motor piston and fluid piston rods to maximize seal life.

Superior Sealing

Non-metallic poppet valves offer positive sealing performance, even with contaminated “dirty” air environments for long life without repair.

Corrosion-Resistant

Corrosion-resistant design utilizes liquid salt nitriding, nickel plating, stainless steel, aluminum and chrome on key components for longer life.

Typical Applications

- Automotive dealerships
- Fast lube centers
- Service shops
- Heavy-duty dealerships
- Fleet services facilities
- In-plant
- Lube trucks
- Mining

Typical Fluids Handled

- Grease up to NLGI #2

Fire-Ball® 425 Grease Pumps

Pump Performance

Fire-Ball 425 10:1 Pumps

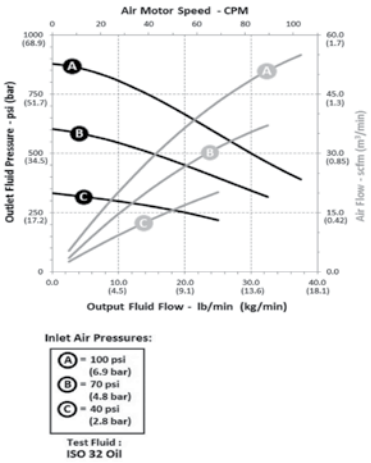

Fire-Ball 425 50:1 Pumps

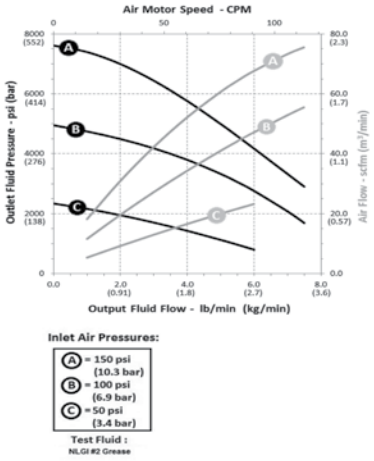

Fire-Ball 425 75:1 Pumps

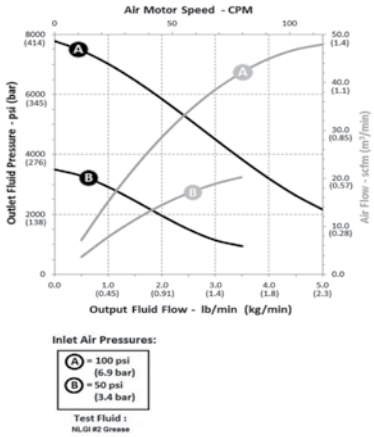

Technical Specifications

	Fire-Ball 425 10:1	Fire-Ball 425 50:1	Fire-Ball 425 75:1
Fluid Pressure Ratio	10:1	50:1	75:1
Air Motor Effective Diameter	4.25 in (108 mm)	4.25 in (108 mm)	4.25 in (108 mm)
Annual Usage	20,000+ lb (9,072+ kg)	20,000+ lb (9,072+ kg)	20,000+ lb (9,072+ kg)
Maximum Fluid Working Pressure	1,800 psi (124 bar / 12.4 MPa)	7,500 psi (517 bar / 51.7 MPa)	7,500 psi (517 bar / 51.7 MPa)
Approximate Free Flow Rate @ 100 psi	29 lb/min (13.1 kg/min)	9 lb/min (4.1 kg/min)	6.5 lb/min (2.9 kg/min)
Output per Cycle	5.82 oz (164.7 g)	1.06 oz (30 g)	0.71 oz (20 g)
Continuous Duty Flow Rate	3.5 lb/min (1.59 kg/min)	3.35 lb/min (1.52 kg/min)	1.95 lb/min (0.88 kg/min)
Approximate Air Use and Flow @ 100 psi (80 cpm)	45 @ 29 lb/min (1.3 @ 13 kg/min)	43 @ 5.3 lb/min (1.2 @ 2.4 kg/min)	43 @ 3.5 lb/min (1.2 @ 1.6 kg/min)
Air Inlet	1/2 in NPT(F)	1/2 in NPT(F)	1/2 in NPT(F)
Fluid Outlet	1 in NPT(F)	3/8 in NPT(F)	3/8 in NPT(F)
Air Operation Range	40 psi to 180 psi (2.8 bar to 12.5 bar)	40 psi to 150 psi (2.8 bar to 10.4 bar)	40 psi to 100 psi (2.8 bar to 7 bar)
Max Recommended Pump Speed	60 cpm	60 cpm	60 cpm
Cycles per Pound	2.75 cpp	15.1 cpp	22.7 cpp
Cycles per Kg	6 cpk	33 cpk	50 cpk
Wetted Parts	Steel, brass, aluminum, leather, Buna-N	CS, brass, aluminum, leather	CS, brass, aluminum, leather
Sound Pressure Level	80.9 dB(A)	80.9 dB(A)	80.9 dB(A)
Sound Power Level	94.6 dB(A)	94.6 dB(A)	94.6 dB(A)
Approximate Weight	38 lb (17.2 kg)	34 lb to 37 lb (15 kg to 17 kg)	30 lb to 37 lb (14 kg to 17 kg)
Instruction Manual	309407	306674	308777

Ordering Information

Fire-Ball 425 Grease Pumps

Part Number	Ratio	Description
965124	10:1	Stubby pump
965129*	10:1	For 400 lb (180 kg) drum
205394	50:1	For 120 lb (55 kg) drum
205395	50:1	For 400 lb (180 kg) drum

Part Number	Ratio	Description
239731	75:1	For 35 or 70 lb (16 or 32 kg) pail
239729	75:1	For 120 lb (55 kg) drum
239730	75:1	For 400 lb (180 kg) drum

*Includes 2 in NPT Bung Adapter (part number 222308).

Ordering Information

50:1 120 lb and 400 lb Grease Pump Packages

Package Number		223108*	225781*	226018*
Type of Package		Stationary Supply	Stationary Supply	Stationary Supply Topper-Inductor
Ratio		50:1	50:1	50:1
Container Size		120 lb (55 kg)	400 lb (180 kg)	400 lb (180 kg)
Pump Part Number		205394	205395	205395
Dispense Kits		222076	222076	205102
Dispense Kit Includes	Fluid Hose	3/8 in x 6 ft	3/8 in x 6 ft	3/8 in x 6 ft
	Hose Part Number	109163	109163	109163
	6 ft Coupled Hose	205418	205418	–
	Fitting(s)	155470/155494	155470/155494	156859/196220/205528
Air Hose Size		1/2 in x 6 ft	1/2 in x 6 ft	1/2 in x 6 ft
Drum Cover		204574	200326	–
Follower Plate		223344	223846	–
Pump Support		–	–	204461
Elevator		–	–	204385
Inductor Plate		–	–	205699
Base		–	–	205339
Instruction Manual		307880	307880	306556

*Use 1/2 in (12.7 mm) air regulator (104266) and gauge (100960); must be ordered separately.

Ordering Information

75:1 120 lb and 400 lb Grease Pump Packages

Package Number		244635*	244636*	244637*
Type of Package		Stationary Cover-Mount	Stationary Cover-Mount	Stationary Inductor
Ratio		75:1	75:1	75:1
Container Size		120 lb (55 kg)	400 lb (180 kg)	400 lb (180 kg)
Pump Part Number		239729	239730	239730
Dispense Kits		222076	222076	205102
Dispense Kit Includes	Fluid Hose	3/8 in x 6 ft	3/8 in x 6 ft	3/8 in x 6 ft
	Hose Part Number	109163	109163	109163
	6 ft Coupled Hose	205418	205418	–
	Fitting(s)	155470/155494	155470/155494	156859/196220/205528
Air Hose Size		1/2 in x 6 ft	1/2 in x 6 ft	1/2 in x 6 ft
Drum Cover		204574	200326	–
Follower Plate		223344	223846	–
Pump Support		–	–	204461
Elevator		–	–	204385
Inductor Plate		–	–	205699
Base		–	–	205339
Instruction Manual		307880	307880	306556

*Use 1/2 in (12.7 mm) air regulator (104266) and gauge (100960); must be ordered separately.

Ordering Information

50:1 and 75:1 Grease Pump Lube Truck Packages

Package Number		223107*	222075*	243817*	243818**
Type of Package		Lube Truck	Lube Truck	Lube Truck	Lube Truck
Ratio		50:1	50:1	75:1	75:1
Container Size		120 lb (55 kg)	400 lb (180 kg)	120 lb (55 kg)	400 lb (180 kg)
Pump Part Number		205394	205395	239729	239730
Dispense Kits		222076	222076	222076	222076
Dispense Kit Includes	Fluid Hose	3/8 in x 6 ft	3/8 in x 6 ft	3/8 in x 6 ft	3/8 in x 6 ft
	Hose Part Number	109163	109163	109163	109163
	6 ft Coupled Hose	205418	205418	205418	205418
	Fitting(s)	155470/155494	155470/155494	155470/155494	155470/155494
Air Hose Size		1/2 in x 6 ft	1/2 in x 6 ft	1/2 in x 6 ft	1/2 in x 6 ft
Drum Cover		222060	207366	222060	207366
Follower Plate		223344	223846	223344	223846
Hold Down Kit		222061	207361	222061	207361
Instruction Manual		307880	307880	307880	307880

*Use 1/2 in (12.7 mm) air regulator (104266) and gauge (100960); must be ordered separately.
**Use 3/8 in (9.5 mm) air regulator (109075); must be ordered separately.

Ordering Information

Grease Pump RAM Packages

		Part 257435 (Ram Assembly) not shown	Part 257435 (Ram Assembly) not shown
Package Number		244905	244906
Type of Package		Stationary Ram	Stationary Ram
Ratio		50:1	75:1
Container Size		400 lb (180 kg)	400 lb (180 kg)
Pump Part Number		Fire-Ball 425 – 205395	Fire-Ball 425 – 239730
Dispense Kits		222076	222076
Dispense Kit Includes	Fluid Hose	3/8 in x 6 ft	3/8 in x 6 ft
	Hose Part Number	109163	109163
	6 ft Coupled Hose	205418	205418
	Fitting(s)	155470/155494	155470/155494
Air Hose Size		1/2 in x 6 ft	1/2 in x 6 ft
Ram		257435	257435
Adapter Kit		224266	224266
Air Regulator and Gauge		*	244844
Ram Plate Seal Kit		247335	247335
Pump Mount Kit		247337	247337
Instruction Manual		309345	309345

*Air gauge included with RAM controller.

RAM-Mount

- Force feed high volume pumps
- Extreme viscous grease
- Reduce waste
- Clean and convenient method of drum change

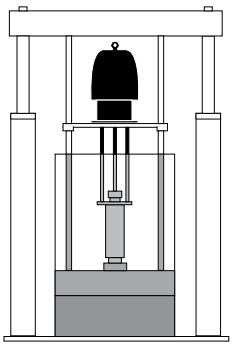

Ordering Information

50:1 and 75:1 Grease Pump Side Pocket and Horizontal Mount Packages

Package Number		244646	244647	244648
Type of Package		Side Pocket Mount	Side Pocket Mount	Horizontal Mount
Ratio		50:1	75:1	75:1
Pump Part Number		205395	239730	239731
Dispense Kits		222076	222076	222076
Dispense Kit Includes	Fluid Hose	3/8 in x 6 ft	3/8 in x 6 ft	3/8 in x 6 ft
	Hose Part Number	109163	109163	109163
	6 ft Coupled Hose	205418	205418	205418
	Fitting(s)	155470/155494	155470/155494	155470/155494
Air Hose Size		1/2 in x 6 ft	1/2 in x 6 ft	1/2 in x 6 ft
Pump Mount Bracket		3 in (f) Coupler – 512874	3 in (f) Coupler – 512874	3 in (f) Coupler – 512874
Air Regulator		244844	244844	244844
Air Shut-Off Valve		110225	110225	110225
Installation Kit		948392	948392	948392
Instruction Manual		309350	309350	309350

Ordering Information

Air Regulators

Part Number	Description
109075	3/8 in NPT (fbe) with gauge
244844	1/2 in NPT (fbe) with gauge

Bleed-Type Air Shut-Off Valves

Part Number	Description
110223	1/4 in NPT
110224	3/8 in NPT
110225	1/2 in NPT
110226	3/4 in NPT

Bung Adapters

Part Number	Dimensions	Compatible Pumps
239965	1.65 in ID	Fire-Ball 425, 50:1 Fire-Ball 425, 75:1
239966	1.29 in ID	Fire-Ball 300, 15:1 Fire-Ball 300, 50:1

Dispense Hose and Fitting Kits

Part Number	Compatible Pump(s)	Includes							
		Fluid Hose Size	Fluid Hose	Grease Dispense Valve	Z-Swivel	3/8 in Closed Nipple	Quick-Disconnect Nipple	Quick-Disconnect Coupler	3/8 in Air Regulator
222080	Fire-Ball 300, 15:1	1/4 in x 15 ft	109165	242056	202577	156849	169971	110198	110234
222081	Fire-Ball 300, 15:1	1/4 in x 25 ft	109167	242056	202577	156849	169971	110198	110234
236058	Mini Fire-Ball 225, 50:1	1/4 in x 12 ft	109151	242056	202577	–	169971	114558	–
222070	Fire-Ball 300, 50:1	1/4 in x 12 ft	109151	242056	202577	–	169971	114558	–
26C183	Fire-Ball 300, 50:1	1/4 in x 12 ft	109151	26C184	202577	–	169971	114558	–
222383	Mini Fire-Ball 225, 50:1 Fire-Ball 300, 50:1	1/4 in x 25 ft	109154	242056	202577	–	169971	114558	–

Hose and Fitting Kits

Part Number	Pressure Rating	Compatible Pumps	Includes			
			6 ft Air Hose	Air Hose Swivel Elbow	6 ft Fluid Hose	Fluid Hose Swivel Elbow
222072	5,000 psi (345 bar)	Fire-Ball 300, 50:1	203320	155494	109150	155541
222076	4,000 psi (276 bar)	Fire-Ball 425, 50:1	205418	155470	109163	155494

Ordering Information

Drum Covers

Part Number	Description	Compatible Pumps
222059	Cover for 35 lb (16 kg) pails	Mini Fire-Ball 225, 50:1 Fire-Ball 300, 50:1
24R350	LD Cover for open-head 35 lb (16 kg), 70 lb (32 kg) or 120 lb (55 kg) drums	Mini Fire-Ball 225, 50:1 Fire-Ball Pumps
204574	SD Cover for open-head 70 lb (32 kg) or 120 lb (55 kg)	Mini Fire-Ball 225, 50:1 Fire-Ball Pumps
200326	Cover for open-head 400 lb (180 kg) drums	Mini Fire-Ball 225, 50:1 Fire-Ball 300, 15:1 Fire-Ball 300, 50:1 Fire-Ball 425, 10:1 and 50:1
160754	Bung-adapter plate for mounting pump to 120 lb (55 kg) or 400 lb (180 kg) drum covers	Fire-Ball Pumps

Drum Elevator

Part Number	Description	Includes		
		Cover Support	Drum Elevator	Air Control Kit
241663	Air-powered elevator to speed up 400 lb (180 kg) drum changes	207562	204385	207561

Mounting Accessories for Fire-Ball Pumps

	Part Number	Description
	948393	Flange Adapter (male) for Fire-Ball 300 Pumps
	948392	Flange Adapter (male) for Fire-Ball 425 Pumps
	512874	Coupler (female), 3 in thread

Ordering Information

Follower Plates

Part Number	Container Size	Flexible Wiper	Compatible Pumps
24F901	35 lb (16 kg)	16F769	LD 50:1 Mini Fire-Ball 225, 50:1 Fire-Ball 300, 15:1 Fire-Ball 300, 50:1
24F902	70 lb (32 kg) 120 lb (55 kg)	16F781	LD 50:1 Mini Fire-Ball 225, 50:1 Fire-Ball 300, 15:1 Fire-Ball 300, 50:1
24F903	400 lb (180 kg)	16F784	LD 50:1 Mini Fire-Ball 225, 50:1 Fire-Ball 300, 15:1 Fire-Ball 300, 50:1
220653	35 lb (16 kg)	183241	Mini Fire-Ball 225, 50:1 Fire-Ball 300, 15:1 Fire-Ball 300, 50:1
220654	70 lb (32 kg) 120 lb (55 kg)	183243	Mini Fire-Ball 225, 50:1 Fire-Ball 300, 15:1 Fire-Ball 300, 50:1
223845	400 lb (180 kg)	186463	Mini Fire-Ball 225, 50:1 Fire-Ball 300, 15:1 Fire-Ball 300, 50:1
204130	400 lb (180 kg)	–	Mini Fire-Ball 225, 50:1 Fire-Ball 300, 15:1 Fire-Ball 300, 50:1
223344	120 lb (55 kg)	183243	Fire-Ball 425, 50:1 Fire-Ball 425, 75:1
223700	120 lb (55 kg)	183243	Dyna-Star 5:1
223701	400 lb (180 kg)	186463	Dyna-Star 5:1 Fire-Ball 425 10:1
223846	400 lb (180 kg)	186463	Fire-Ball 425, 50:1 Fire-Ball 425, 75:1
205337	400 lb (180 kg)	-	Fire-Ball 425, 50:1 Fire-Ball 425, 75:1

High-Pressure Grease Shut-Off Valve

Part Number	Description	Pressure Rating	Inlet
202869	High-pressure needle valve	5,000 psi (345 bar)	1/2 in

Lincoln-to-Graco Adapter Kit

Part Number	Description	Compatible Pump
241246	For replacing a Series 20 Lincoln	Fire-Ball 300, 50:1

Ordering Information

Portable Bases

	Part Number	Description
	131183	Drum dolly, 35 lb (16 kg)
	131184	Drum dolly, 120 lb (54 kg)
	129645	Drum dolly, 400 lb (182 kg)
	203622	Caster base for 120 lb (54 kg) drums

Carts

	Part Number	Description	Compatible Container Size
	203650	Drums fit onto recess on formed base. Rim clamps secure drum onto cart.	35 lb (16 kg) 70 lb (32 kg) 120 lb (55 kg)
	222243	Heavy-duty drum cart with pneumatic wheels	120 lb (55 kg)
	111470	Heavy-duty drum truck on roll-around base	400 lb (180 kg)

Pro-Shot Dispense Valves

	Part Number	Description
	242055	1/4 in NPT(F) inlet without coupler or extension
	242056	1/4 in NPT(F) inlet with coupler and extension 200389
	242057	3/8 in NPT(F) inlet without coupler or extension
	242058	3/8 in NPT(F) inlet with coupler and extension 200389
	224872	Includes 30 in (76.2 cm) whip hose (109148), Z-Swivel (202577), and grease valve (242056)

Swivel

	Part Number	Description
	202577	Z-Swivel allows non-binding movement for hard-to-reach locations, 1/4-18 NPT

GT 750 36:1 Grease Pumps

Grease

Fewer Strokes and Longer Pump Life

The GT 750 pump was engineered to perform in challenging applications and changing environments. The large 7.5-inch air motor and pump lower combination allows the GT 750 pump to move the same amount of grease with up to four times fewer pump strokes.

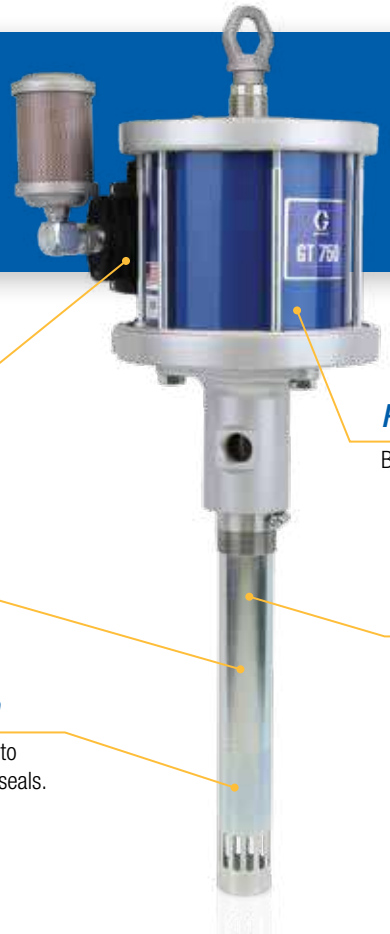

Up to 32 lb/min (13.6 kg/min)

Efficient Air Motor

Use less air to move more grease.

Proven Pump Technology

Based on Graco NXT™ pump technology.

High Flow Rates

Up to 32 lb/min of grease.

Multiple Tank Options

Available in 35, 120 and 400 lb down tube lengths.

High Volume Per Stroke

Pump more grease without having to drive pump too quickly to damage seals.

Typical Applications

- Lube trucks
- Mining
- Heavy-duty dealerships
- Fleet service facilities
- In-plant

Typical Fluids Handled

- Grease up to NLGI #2

Technical Specifications

Fluid Pressure Ratio	36:1
Air Pressure Operating Range	40-100 psi (3-7 bar)
Maximum Working Pressure	3600 psi (248 bar)
Maximum Recommended Continuous Pump Speed	60 cycles per minute
Air Motor Effective Diameter	7.5 in (190 mm)
Stroke	4.75 in (121 mm)
Air Inlet	1/2 in NPT
Fluid Outlet	1 in NPT
Maximum Delivery	32 lb/min (13.6 kg/min)
Pump Weight	59 lb (26.8 kg)
Wetted Parts	Steel, brass, Buna-N, urethane, ductile iron, aluminum
Sound Power (measured at 70 psi [4.8 bar], 20 CPM per ISO-9414-2)	77.2 dBa
Sound Pressure (tested at 3.28 ft [1 m] from equipment)	70.5 dBa
Pump Cycles Per Pound	3 cycles
Pump Cycles Per KG	6 cycles
Warranty	Five years overall and 1 year wear parts
Instruction Manual	3A5363

Pump Performance

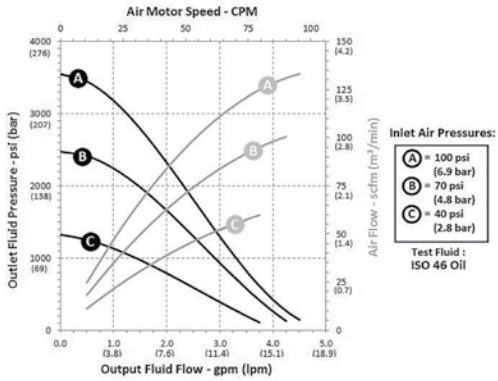

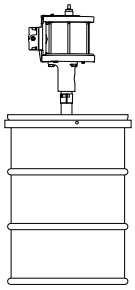

Drum Mount

Side Pocket Mount

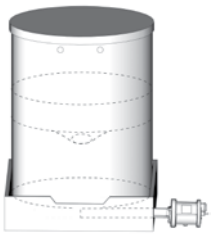

Horizontal Mount

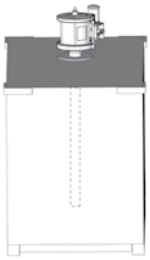

Top Mount

Ordering Information

GT 750 36:1 Grease Pumps

	Part Number	Description
	24W498	GT 750, 36:1 Grease Pump, stubby length
	25D116	GT 750, 36:1 Grease Pump, 120 lb length
	24W337	GT 750, 36:1 Grease Pump, 400 lb length

Accessories

Cam Lock Adapters

	Part Number	Description
	131380	Male Cam Lock Adapter – 3 in
	131394	Female Cam Lock Adapter – 3 in

Drum Covers

	Part Number	Description
	204574	Cover for 120 lb (54 kg) drums
	200326	Cover for 400 lb (182 kg) drums
	160754	Bung Adapter Plate (used to mount pump to drum cover) – 2 in

Follower Plates

	Part Number	Description
	223700	Follower plate for 120 lb (54 kg) drums
	223701	Follower plate for 400 lb (182 kg) drums

Move Large Amounts of Grease Fast

Tested to outperform and outlast all other pumps on the market – with its long-life packing design and intuitive, easy-to-use controls – the NXT™ High-Flo pump is the best value for the money. Fewer parts, faster repairs, and long-lasting durability.

Optional DataTrak Control

Intuitive, easy-to-use DataTrak™ control gives you pump diagnostics, material usage tracking and pump runaway protection.

NXT Air Motor

Modular design for easier maintenance with rugged body armor that won't rust or dent.

Modular Air Valves

Easy-to-repair valve eliminates stalling and contains deicing controls.

Integrated Air Controls

Easy-turn, lockable regulator is front-mounted for easy access. Compact and modular with built-in filtration.

Piston Valve with Floating Piston Seal

For maximum pressure balance over a range of material viscosities.

Typical Applications

- Fleet services facilities
- In-plant
- Mining

Typical Fluids Handled

- Grease up to NLGI #2

Pump Performance

Inlet Pressures:

A = 100 psi (6.9 bar) air pressure B = 70 psi (4.8 bar) air pressure C = 40 psi (2.8 bar) air pressure

TEST FLUID: No. 10 Weight Oil

NXT 14:1 Check-Mate Pumps

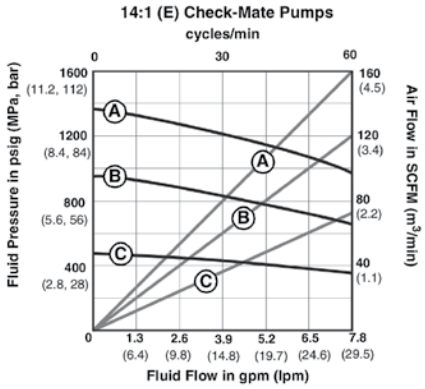

NXT 26:1 Check-Mate Pumps

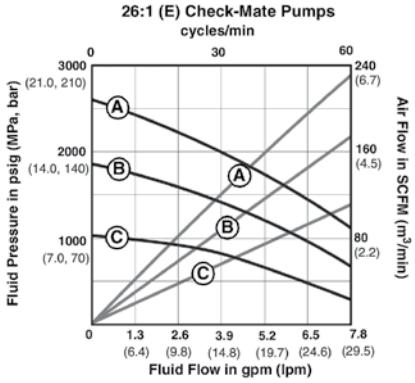

NXT 29:1 Check-Mate Pumps

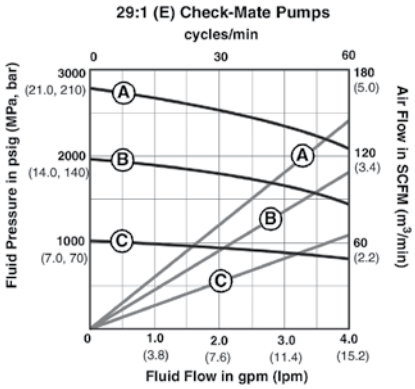

Technical Specifications

	NXT Check-Mate 14:1	NXT Check-Mate 26:1	NXT Check-Mate 29:1
Fluid Pressure Ratio	14:1	26:1	29:1
Air Motor	NXT 3400	NXT 6500	NXT 3400
Air Motor Effective Diameter	7.5 in (191 mm)	10.4 in (264 mm)	7.5 in (191 mm)
Pump Lower	L500CS	L500CS	L250CS
Maximum Fluid Working Pressure	1,400 psi (97 bar / 9.7 MPa)	2,600 psi (179 bar / 17.9 MPa)	2,900 psi (200 bar / 20 MPa)
Output per Cycle	15.4 oz (435 g)	15.4 oz (435 g)	7.7 oz (218 g)
Air Inlet	3/4 in NPT(F)	3/4 in NPT(F)	3/4 in NPT(F)
Fluid Outlet	1-1/2 in NPT(M)	1-1/2 in NPT(M)	1 in NPT(F)
Air Operation Range	0 psi to 100 psi (0 bar 7 bar)	0 psi to 100 psi (0 bar to 7 bar)	0 psi to 100 psi (0 bar to 7 bar)
Max Recommended Pump Speed	20 cpm	20 cpm	20 cpm
Cycles per Pound	1.0 cpp	1.0 cpp	2.1 cpp
Cycles per Kg	2 cpk	2 cpk	5 cpk
Wetted Parts	303, 304, 316 and 17-4PH grades of stainless steel; ductile iron and carbon steel, electroless nickel plated; carbon steel, zinc and electroless nickel plated; E52100 and ETD 150 alloy steel; PTFE; UHMWPE; carbon-filled PTFE; acetal	303, 304, 316 and 17-4PH grades of stainless steel; ductile iron and carbon steel, electroless nickel plated; carbon steel, zinc and electroless nickel plated; E52100 and ETD 150 alloy steel; PTFE; UHMWPE; carbon-filled PTFE; acetal	ETD 150, 41L40, and 4140 alloy steel; 304, 316, 17-4PH and 440C grades of stainless steel; acetal; carbon-filled PTFE; carbon steel; ductile iron; electroless nickel, zinc and chrome plating; PTFE; UHMWPE
Sound Pressure Level	77 dB(A)	80 dB(A)	77 dB(A)
Sound Power Level	87 dB(A)	90 dB(A)	87 dB(A)
Approximate Weight	152 lb (69 kg)	169 lb (77 kg)	128 lb (58 kg)
Instruction Manual	System – 312863 Pump – 312376 Pump Lower – 312375 Air Motor – 311238	System – 312863 Pump – 312376 Pump Lower – 312375 Air Motor – 311238	System – 312863 Pump – 312376 Pump Lower – 312375 Air Motor – 311238

NXT Check-Mate® Grease Pumps

Pump Performance

Inlet Pressures:

A = 100 psi (6.9 bar) air pressure B = 70 psi (4.8 bar) air pressure C = 40 psi (2.8 bar) air pressure

TEST FLUID: No. 10 Weight Oil

NXT 55:1 Check-Mate Pumps

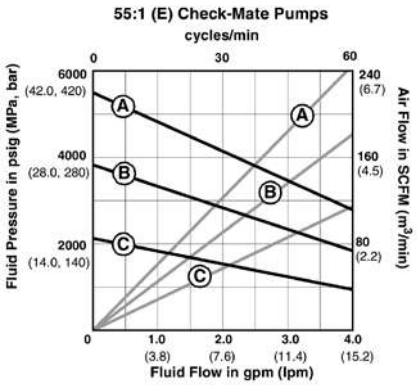

NXT 63:1 Check-Mate Pumps

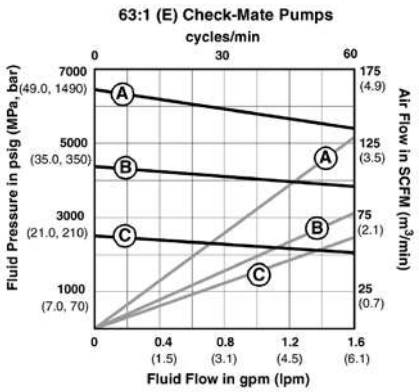

NXT 68:1 Check-Mate Pumps

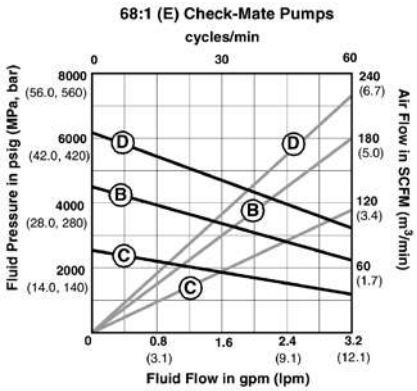

Technical Specifications

	NXT Check-Mate 55:1	NXT Check-Mate 63:1	NXT Check-Mate 68:1
Fluid Pressure Ratio	55:1	63:1	68:1
Air Motor Effective Diameter	10.4 in (264 mm)	7.5 in (191 mm)	10.4 in (264 mm)
Maximum Fluid Working Pressure	5,500 psi (379 bar / 37.9 MPa)	4,500 psi (310 bar / 31 MPa)	5,300 psi (366 bar / 36.6 MPa)
Output per Cycle	7.7 oz (218 g)	3.1 oz (87 g)	6.1 oz (174 g)
Air Inlet	3/4 in NPT(F)	3/4 in NPT(F)	3/4 in NPT(F)
Fluid Outlet	1 in NPT(F)	3/4 in NPT(M)	1 in NPT(F)
Air Operation Range	0 psi to 100 psi (0 bar to 7 bar)	0 psi to 72 psi (0 bar to 4.9 bar)	0 psi to 78 psi (0 bar to 5.4 bar)
Max Recommended Pump Speed	20 cpm	20 cpm	20 cpm
Cycles per Pound	2.1 cpp	5.2 cpp	2.6 cpp
Cycles per Kg	5 cpk	11 cpk	6 cpk
Wetted Parts	ETD 150, 41L40 and 4140 alloy steel; 304 and 17-4PH grades of stainless steel; acetal; carbon-filled PTFE; CS; ductile iron; eNi, Zn and chrome plating; UHMWPE	ETD 150, 41L40 and 4140 alloy steel; 304 and 17-4PH grades of stainless steel; acetal; carbon-filled PTFE; CS; ductile iron; eNi, Zn and chrome plating; UHMWPE	ETD 150, 41L40 and 4140 alloy steel; 304, 316 and 17-4PH grades of stainless steel; acetal; carbon-filled PTFE; CS; ductile iron; eNi, Zn and chrome plating; PTFE; UHMWPE
Sound Pressure Level	80 dB(A)	87 dB(A)	80 dB(A)
Sound Power Level	90 dB(A)	87 dB(A)	90 dB(A)
Approximate Weight	145 lb (66 kg)	101 lb (46 kg)	145 lb (66 kg)
Instruction Manual	System – 312863 Pump – 312376 Pump Lower – 312375 Air Motor – 311238	System – 312863 Pump – 312376 Pump Lower – 312375 Air Motor – 311238	System – 312863 Pump – 312376 Pump Lower – 312375 Air Motor – 311238

Ordering Information

Pump Packages with DataTrak

Package Number	247973	247976	247974	247977	247975	247978
Ratio	14:1	26:1	29:1	55:1	63:1	68:1
Pump with DataTrak	P14MCS	P26MCS	P29MCS	P55MCS	P63MCS	P68MCS
Mounting Type	Floor Standing	Floor Standing	Floor Standing	Floor Standing	Floor Standing	Floor Standing
Mounting Number	223952	223952	223952	223952	223952	223952
3/4 in x 6 ft Air Hose	208610	208610	208610	208610	208610	208610
1 in x 6 ft Fluid Hose	115042	244657	244657	244657	244657	244657

Pump Packages without DataTrak

Package Number	24E006	24E007	24E008	24E009	24E010	24E011
Ratio	14:1	26:1	29:1	55:1	63:1	68:1
Pump without DataTrak	P14DCS	P26DCS	P29DCS	P55DCS	P63DCS	P68DCS
Mounting Type	Floor Standing	Floor Standing	Floor Standing	Floor Standing	Floor Standing	Floor Standing
Mounting Number	223952	223952	223952	223952	223952	223952
3/4 in x 6 ft Air Hose	208610	208610	208610	208610	208610	208610
1 in x 6 ft Fluid Hose	115042	244657	244657	244657	244657	244657

Ordering Information

RAM Pump Packages with DataTrak

Package Number	247979	247980	247981
Ratio	14:1	63:1	68:1
RAM System	CM53BN	CM17BN	CM2RBN
3/4 in x 6 ft Air Hose	208610	208610	208610
1 in x 6 ft Fluid Hose	115042	244657	244657

RAM Pump Packages without DataTrak

Package Number	24E780	24E781	24E782
Ratio	14:1	63:1	68:1
RAM System	CM515N	CM155N	CM2L5N
3/4 in x 6 ft Air Hose	208610	208610	208610
1 in x 6 ft Fluid Hose	115042	244657	244657

Accessory Ordering Information

Drum Covers

Part Number	Description
200326	Cover for open-head 400 lb (180 kg) drums
204574	SD Cover for open-head 70 lb (32 kg) or 120 lb (55 kg)
24R350	LD Cover for open-head 35 lb (16 kg), 70 lb (32 kg) or 120 lb (55 kg) drums

Field-Proven, Energy-Efficient

Hydraulic Dyna-Star pumps provide reliable, quiet, ice-free performance at maximum pressure and low-flow rates and are up to three times more energy efficient than comparable compressed-air systems.

Built-In Reliability

Self-lubricating vertical design for long life and reliable operation in high-vibration environments.

Quiet Hydraulic Motor

No need for add-on mufflers.

High-Efficiency Motor

Uses less hydraulic oil.

Typical Applications

- Service shops
- Heavy-duty dealerships
- Fleet services facilities
- In-plant
- Lube trucks
- Mining

Typical Fluids Handled

- Grease up to NLGI #2

Technical Specifications

Fluid Pressure Ratio	5:1	10:1
Pump Number	224912 – 35 lb (16 kg) 224751 – 120 lb (55 kg) 224752 – 400 lb (180 kg)	247540 – 60 lb (27 kg) 247443 – 120 lb (55 kg) 247450 – 400 lb (180 kg)
Applications	Grease Dispensing	Grease Dispensing
Maximum Input Pressure	1,500 psi (102 bar)	600 psi (41 bar)
Maximum Fluid Input Volume	3 gpm (11.4 lpm)	3 gpm (11.4 lpm)
Maximum Output Flow Rate	4 lb/min (1.8 kg)	1.1 lb/min (0.5 kg)
Maximum Recommended CPM	60	60
Maximum Fluid Output Pressure	7,500 psi (517 bar)	7,500 psi (517 bar)
Hydraulic Supply Inlet	3/8 in NPT	3/4 to 16 in JIC (37º Flare)
Hydraulic Return Outlet	3/4 in NPT	3/4 in NPT
Fluid Outlet	1/2 in NPT	1/2 in NPT
Maximum Incoming Fluid Temp.	130°F (54°C)	200°F (93°C)
Wetted Parts	Steel, copper, polyurethane, Buna-N, polyester elastomer	Steel, copper, polyurethane, Buna-N, polyester elastomer
Sound Pressure Level	77 dB(A)	77 dB(A)
Approximate Weight	224912 – 32.5 lb (14.7 kg) 224751 – 37.5 lb (17 kg) 224752 – 42 lb (19.1 kg)	247540 – 41 lb (18.6 kg) 247443 – 43.5 lb (19.7 kg) 247450 – 48 lb (21.8 kg)
Instruction Manual	308156	312350

Ordering Information

Dyna-Star Hydraulic Pumps

Part Number	Description
224912	5:1 Grease pump for 35 lb (16 kg) pails
224751	5:1 Grease pump for 120 lb (55 kg) drum
224752	5:1 Grease pump for 400 lb (180 kg) drum
247450	10:1 Grease pump for 35 lb (16 kg) pails
247443	10:1 Grease pump for 120 lb (55 kg) drum
247450	10:1 Grease pump for 400 lb (180 kg) drum

Accessories

Drum Covers

Part Number	Description
224915	Cover for 35 lb (16 kg) pail
204574	Cover for 120 lb (55 kg) drum
200326	Cover for 400 lb (180 kg) drum

Follower Plates

Part Number	Description
224916	Follower plate for 35 lb (16 kg)
223700	Follower plate for 120 lb (55 kg)
223701	Follower plate for 400 lb (180 kg)

Hydraulic Fluid Controls

Required for each pump

Part Number	Description
236864	Dyna-Star Fluid Controls [1,500 psi (102 bar); 3 gpm (11.4 lpm)]. Includes manifold with pressure-reducing valve, flow control valve, pressure gauge, shut-off ball valves, and 3 ft (0.9 m) supply and return hoses. Instruction manual 308395.

Tie-Down Covers

Part Number	Description
222060*	Dyna-Star, 5:1 tie-down cover for 120 lb (55 kg)
207366**	Dyna-Star, 5:1 tie-down cover for 400 lb (180 kg)

*Use with hold-down kit 222061. **Use with hold-down kit 207361.

Field-Proven, Energy-Efficient

When paired with any of Graco's priming piston pumps, the Viscount II hydraulic motor offers exceptional cost savings by operating on 20% of the energy used by a pneumatic motor.

Built-In Reliability

Self-lubricating vertical design for long life and reliable operation in high-vibration environments.

Quiet Hydraulic Motor

No need for add-on mufflers.

High-Efficiency Motor

Uses less hydraulic oil.

Typical Applications

- Service shops
- Heavy-duty dealerships
- Fleet services facilities
- In-plant
- Lube trucks
- Mining

Typical Fluids Handled

- Grease up to NLGI #2

Technical Specifications

Fluid Pressure Ratio	2.4:1
Pump Number	222902 – 400 lb (180 kg)
Applications	Grease Dispensing
Maximum Input Pressure	1,500 psi (103.5 bar)
Maximum Fluid Input Volume	12 gpm (45.4 lpm)
Maximum Output Flow Rate	7.5 gpm (28.5 lpm)
Maximum Recommended CPM	60
Maximum Fluid Output Pressure	2,300 psi (159 bar)
Hydraulic Supply Inlet	3/4 in NPT
Hydraulic Return Outlet	1 in NPT
Fluid Outlet	1-1/2 in NPT
Maximum Incoming Fluid Temp.	130°F (54°C)
Wetted Parts	Carbon steel; chrome, zinc and electroless nickel plating; 304 and 17-4 PH grades of stainless steel; E52100 alloy steel; ductile iron; acetal; PTFE; ultra-high-molecular weight polyethylene
Sound Pressure Level	< 70 dB(A)
Approximate Weight	196 lb (89 kg)
Instruction Manual	308149

Ordering Information

Viscount II Pumps

Part Number	Description
222902	2.4:1 Grease Pump for 400 lb (180 kg) drum

Accessories

Hydraulic Fluid Controls

Required for each pump

	Part Number	Description
	236865	Viscount II Fluid Controls [1,500 psi (102 bar); 3 gpm (11.4 lpm)]. Includes manifold with pressure-reducing valve, flow control valve, pressure gauge, shut-off ball valves, and 3 ft (0.9 m) supply and return hoses. Instruction manual 308395.

Ordering Information

Manual Dispense from Bulk Containers

Package Number	225914*	225844*	112197**	112198**
Fluids Handled	Grease	Grease	Grease	Grease
Container Size	35 lb (16 kg)	35 lb (16 kg)	35 lb (16 kg)	120 lb (55 kg)
Pump Part Number	203702	203702	–	–
Dispense Kit	203703	203703	Filler Adapter***	Filler Adapter***
Booster Gun	203697	–	–	–
Cover and Follower Plate	203701	203701	–	–
Instruction Manual	306436	306436	306436	306436

* Delivers 1/4 oz (0.7 grams) of grease per stroke at pressures to 3,000 psi (207 bar). Can service fittings directly or be used to charge a booster gun for more efficiency at higher pressures.
** Fills all three-way loading grease guns equipped with filler fittings.
*** Dispense kit 203703 can be used for direct greasing applications (must be ordered separately).

Graco Dispense Valves and Guns Selection Guide

Grease Valves

	Fluid	Type	Maximum Working Pressure	Maximum Flow Rate	Intended Use	Warranty	Reference Pages
Accu-Shot™	NLGI #2	Metered	8,000 psi (552 bar)	2 lb/min 1 kg/min	Indoor/ Outdoor	1 year	153
Pro Shot™	Grease up to NLGI #2	Non-Metered	8,000 psi (552 bar)	2 lb/min 1 kg/min	Indoor/ Outdoor	1 year	154
Power Shot™	Grease up to NLGI #2	**Booster**	Supply 5,000 psi (345 bar) Output 18,000 psi (1,242 bar)	N/A	Indoor/ Outdoor	1 year	155

Grease Guns

	Fluid	Style	Maximum Working Pressure	Loading	Intended Use	Warranty	Reference Pages
Manual	Grease up to NLGI #2	Lever	6,000 psi to 10,000 psi (414 bar to 690 bar)	Cartridge/ bulk fill/ loader fill/ suction	Indoor/ Outdoor	1 year	156
Pneumatic	Grease up to NLGI #2	Pistol	6,000 psi (414 bar)	Bulk fill/ loader fill	Indoor/ Outdoor	1 year	156
Booster	Grease up to NLGI #2	Pistol	10,000 psi (690 bar)	Loader fill	Indoor/ Outdoor	1 year	156

Accu-Shot™ Metered Grease Valve

1 Year Warranty

For Heavy-Duty Applications

Designed to perform in heavy-equipment shops, fleet maintenance shops, municipal garages and higher-volume in-plant applications with longer plumbing runs and larger fluid usage.

Easy-to-Read LCD

Easily reset electronic display.

Accurate Grease Metering

± 3% accuracy with ± 1% repeatability.

Battery Powered

Utilizes two standard AA alkaline batteries.

Handles Pressure Up to 5,000 psi (345 bar)

Flow up to 36 oz/min (1 kg/min).

Technical Specifications

Maximum Working Pressure	5,000 psi (345 bar)
Metering System	Oval gears
Accuracy	± 3% with grease consistency (grade NLGI) 2/3
Repeatability (typical)	± 1% with grease consistency (grade NLGI) 2/3
Storage Temperature Range	-4°F to 158°F (-20°C to 170°C)
Operating Temperature Maximum	95 (%RU)
Battery	Standard alkaline batteries 2 x 1.5 Volt Size AA
Battery Life	18 to 24 months (depends on usage)
Dimensions (without extension)	8.8 in L x 1.8 in W x 4.4 H (22.4 cm L x 4.6 cm W x 11.2 cm H)
Weight	2.2 lb (1.0 kg)
Warranty	One year
Instruction Manual	309454

Typical Applications

- Fleet services facilities
- Heavy-duty dealerships
- In-plant
- Lube trucks
- Mining

Typical Fluids Handled

- Grease up to NLGI #2

Ordering Information

Part Number	Description	Includes
233807	U.S. measurement, includes extension and hydraulic coupler	Standard nozzle extension (200389) and 1/4 in NPT inlet
233933	Metric measurement, includes extension and hydraulic coupler	

Pro Shot™ Non-Metered Grease Valve

Grease

For Heavy-Duty Applications

Designed to perform in heavy-equipment shops, fleet maintenance shops, municipal garages and higher-volume in-plant applications with longer plumbing runs and larger fluid usage.

1 Year Warranty

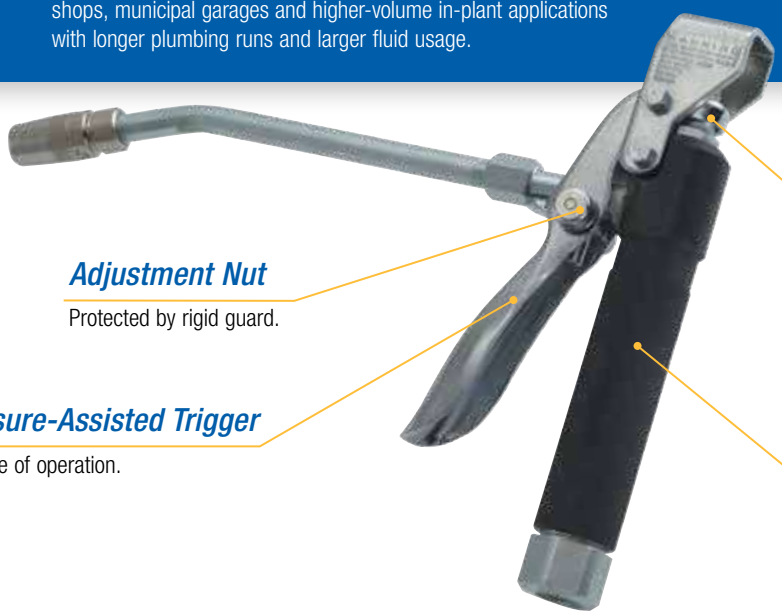

Adjustment Nut

Protected by rigid guard.

Pressure-Assisted Trigger

For ease of operation.

Easy Top Adjustment

With locking nut.

Rugged Design

For harsh environments.

Typical Applications

- Fleet services facilities
- Heavy-duty dealerships
- In-plant
- Lube trucks
- Mining

Typical Fluids Handled

- Grease up to NLGI #2

Technical Specifications

Maximum Working Pressure	8,000 psi (552 bar)
Inlet Size	1/4 in or 3/8 in
Wetted Parts	Chrome vanadium, polyurethane, brass, carbon steel, alloy steel
Warranty	One year
Instruction Manual	309032

Ordering Information

	Description	NPT	
		1/4 in	3/8 in
	Non-metered grease valve with standard nozzle extension (200389)	242056	242058
	Bare non-metered grease valve only	242055	242057
	Non-metered grease valve package. Includes Grease Valve (242056), Z-Swivel (202577) and Whip Hose (109148).	224872	–
	Non-metered grease valve package. Includes Grease Valve (242055), coupler (200325) and Whip Hose (109145).	26C184	–

For Heavy-Duty Applications

Designed to perform in heavy-equipment shops, fleet maintenance shops, municipal garages and higher-volume in-plant applications with longer plumbing runs and larger fluid usage.

1 Year Warranty

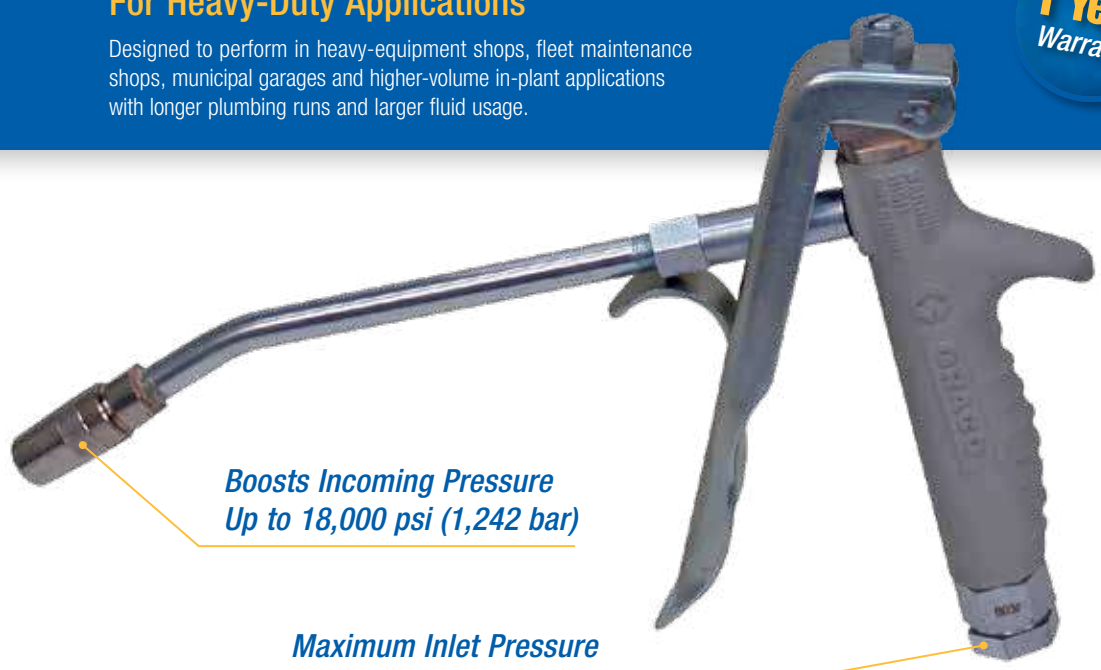

Boosts Incoming Pressure Up to 18,000 psi (1,242 bar)

Maximum Inlet Pressure of 5,000 psi (345 bar)

Typical Applications

- Fleet services facilities
- Heavy-duty dealerships
- In-plant
- Lube trucks
- Mining

Typical Fluids Handled

- Grease up to NLGI #2

Technical Specifications

Maximum Input Pressure	5,000 psi (34 MPa, 345 bar)
Maximum Delivery Pressure	Up to 18,000 psi (124 MPa, 1241 bar)
Inlet Size	1/8 NPT female
Wetted Parts	Alloy steel, carbon steel, chrome alloy, copper, leather
Weight	3 lb (1.4 kg)
Height	7 in (178 mm)
Length	11.675 in (296 mm)
Warranty	One year
Instruction Manual	306271

Ordering Information

Part Number	Description
202600	1/8 NPT(F) Power Shot booster Valve. Includes nozzle (200389)

Accessories

Part Number	Description
202579	Hose swivel (must be ordered separately)

Grease

1 Year Warranty

Lever-Action and Pistol-Style Grease Dispensing Guns

Durable design for years of trouble-free use in demanding environments. Reduces downtime and is easy to load – two- or three-way loading capability makes it easy to keep on greasing.

Comfortable Pistol-Style Grip

Allows for easy, one-handed operation.

Bulk Loader Valve

Allows loading from bulk container pumps.

Optional Pneumatic Operation

Works faster, reduces fatigue and is easier to use in cold conditions.

Heavy-Duty Cast Head and Cartridge Body

Designed for reliability and long life.

Ordering Information

	Part Number	Style	Gun Type	Pressure psi (bar)	Loading	Includes
	112196	Pneumatic	Pistol	6,000 (414)	Bulk fill/ loader fill	Rigid extension and hydraulic coupler
	203697	Booster	Pistol	10,000 (690)	Loader fill	Rigid extension
	110218	Manual	Lever	6,000 (414)	Cartridge/bulk fill	Rigid extension and hydraulic coupler
	110216			10,000 (690)	Cartridge/ bulk fill/ loader fill	Rigid extension, hydraulic coupler and air bleeder valve
	110203		Pistol			Rigid extension, hydraulic coupler and air bleeder valve
	110202					12 in (30.4 cm) flexible extension, hydraulic coupler and air bleeder valve
	110201		Suction	–	Suction	12 in (30.4 cm) clear plastic hose

Accessories

Part Number	Description
109145	12 in (30.4 cm) clear plastic hose without coupler
112255	18 in (45.8 cm) clear plastic hose without coupler

Ordering Information

Z-Swivels

Maximum Working Pressure psi (bar)	Inlet	Outlet	Thread	Part Number
6,500 (450)	1/8 in	1/4 in	NPT	202579
6,500 (450)	1/4 in	1/4 in	NPT	202577
6,500 (450)	3/8 in	3/8 in	NPT	224569
6,000 (414)	1/2 in	1/2 in	NPT	207948

Straight Swivels

Maximum Working Pressure psi (bar)	NPT		Part Number
	Inlet	Outlet	
8,000 (500)	1/8 in	1/8 in	204082
8,000 (500)	1/4 in	1/8 in	204083
8,000 (500)	1/4 in	1/4 in	204084
6,000 (414)	1/2 in	1/2 in	207947
5,000 (345)	3/8 in	1/2 in	214926
5,000 (345)	1/2 in	1/2 in	207946

360° Swivels

Part Number	Includes	
	Fitting	Coupler
203597	203198	200325
203198	203198	–

Nozzles

Part Number	Description
200389	Standard nozzle. Includes straight 6 in (15.2 cm), 1/8 NPT(M) extension tube (197471) and tapered nose coupler (200325).
204072	Swivel nozzle. Includes straight 6 in (15.2 cm), 1/8 NPT(M) extension tube (197471) and tapered nose coupler (200325). Coupler has 360° swivel adapter (203198) for added convenience.
204897	Swivel nozzle. Includes straight 12 in (30.4 cm), 1/8 NPT(M) extension tube (155836) and tapered nose coupler (200325). Coupler has 360° swivel adapter (203198) for added convenience.
204204*	Flexible 12 in (30.4 cm) hose nozzle. 1/8 NPT(M) includes tapered-nose coupler (200325).
203504*	Flexible 12 in (30.4 cm) hose nozzle. 1/8 NPT(M) includes tapered-nose coupler (200325) and lock-sleeve connector (203497) for quick connection to any grease nozzle having tapered-nose coupler.
109145	12 in (30.4 cm) hose nozzle without coupler.
112255	18 in (45.8 cm) hose nozzle without coupler.
109148*	30 in (76.2 cm) hose nozzle without coupler, has 1/8 NPT(M) both ends. Use as alternate for rigid nozzle with tapered-nose coupler 200325.

200389

204072

Ordering Information

Couplers

Part Number	Description
200325	1/8 NPT(F) inlet standard tapered-nose coupler. Hardened jaws grip grease fittings through wide-sealing angle, but release easily. Maximum working pressure 8,000 psi (551 bar).
202650	1/8 NPT(F) inlet standard straight-nose grease coupler for manual operated grease guns only. Maximum working pressure 3,000 psi (206 bar).
200020	1/8 NPT(F) inlet standard button-head coupler. Gives fast, positive seal on button-head fittings.
200021	1/8 NPT(F) inlet giant button-head coupler. Gives fast, positive seal on larger button-head fittings.

200325

200020

Adapters

Adapters have lock-sleeve quick-connector; works with any grease nozzle with a tapered-nose coupler.

Part Number	Description
201881	Hydraulic-to-push adapter. Used for U-joints and low-pressure service.
205532	Hydraulic-to-steel needle adapter. Used for flush fittings. 250 psi (17 bar) max. Not for air grease applications or guns.
205582	Hydraulic-to-nylon needle adapter. Used for removable plugs. 250 psi (17 bar) max. Not for air grease applications or guns.
223187	90° hydraulic-to-push adapter (K-car). Refer to instruction manual 306708.
203497	Lock-sleeve connector. 1/8 NPT(F) outlet. Allows for quick connection to tapered-nose coupler. Inlet is standard grease fitting with sleeve to lock connector in place.
236171	Easy-fill valve. For faster loading of Graco hand grease guns with gun loaders. Replaces hydraulic fittings on all grease guns with 1/8 NPT(F).
204929	Grease loader valve. For use with lever-operated, high-volume grease pumps. Permits quick bulk filling of hand-operated grease lever guns equipped with easy-fill valve 236171.
205592	Hydraulic adapter assortment package. Contains needle adapter (205568), plug adapter (205554), push adapter (201881), nylon needle adapter (205582), hydraulic-to-steel needle adapter (205532) and whip hose nozzle connector (203504).

205532

205582

203497

205592

Tapered Thread Grease Fittings, 10,000 psi (690 bar) (steel; ball check)

Part Number	Shank	Description
100054	9/32	1/8 NPT straight
101277	1-9/32	1/8 NPT straight
100970	9/32	1/8 NPT 30° angle
100834	9/32	1/8 NPT 45° angle
100971	9/32	1/8 NPT 65° angle
100833	9/32	1/8 NPT 90° angle
100848	3/8	1/4 NPT 67° angle
100846	3/16	1/4-28 tapered SAE-LT straight
100847	13/64	1/4-28 tapered SAE-LT 45° angle
101283	3/16	1/4-28 tapered SAE-LT 90° angle
101281	11/32	1/4-28 tapered SAE-LT straight
110702	19/64	1/4-28 tapered SAE-LT 65° angle
100835	12/32	1/4 NPT straight

100054

100970

100834

100833

100848

Ordering Information

1/4 in Tapered Thread-Forming Grease Fittings, 10,000 psi (690 bar) (steel; ball check)

Part Number	Shank	Description
110703	13/64	1/4-28 straight
110705	13/64	1/4-28 90° angle

Drive-Type Grease Fittings (steel)

Part Number	Shank	Description
110706	3/32	3/16 drill straight
110709	7/32	3/16 drill 65° angle
110713	1/4	3/16 drill straight without ball check
101312	7/32	3/16 drill straight with ball check
110710	1/4	5/16 drill straight with ball check
101287	17/64	1/4 drill straight without ball check

101287

Standard Button-Head Grease Fitting (steel)

1/4 in Tapered Thread Grease Fittings (steel; ball check)

Part Number	Shank	Description
100837	7/16	1/4 NPT straight
101297	33/64	3/8 NPT straight
110711	35/64	1/2 NPT straight

101297

Giant Button-Head Grease Fitting (steel)

Part Number	Shank	Description
110712	9/16	3/8 NPT straight
100854	1/2	1/4 NPT straight

110712

Easy-Outs

Part Number	Description
101604	3/8 NPT straight
101605	1/4 NPT straight

101604

Grease Accessory Packages

Convenient storage box contains the following threaded fittings in the quantities listed:

Part Number	Package Includes			
	Quantity	Grease Fitting No.	Shank	Description
202654	30	100054	9/32	1/8 NPT straight
	10	100970	9/32	1/8 NPT 30° angle
	10	100833	9/32	1/8 NPT 90° angle
	20	100846	3/16	1/4-28 straight
	10	100847	13/64	1/4-28 45° angle

202654

Notes

DIESEL EXHAUST FLUID (DEF) SYSTEMS

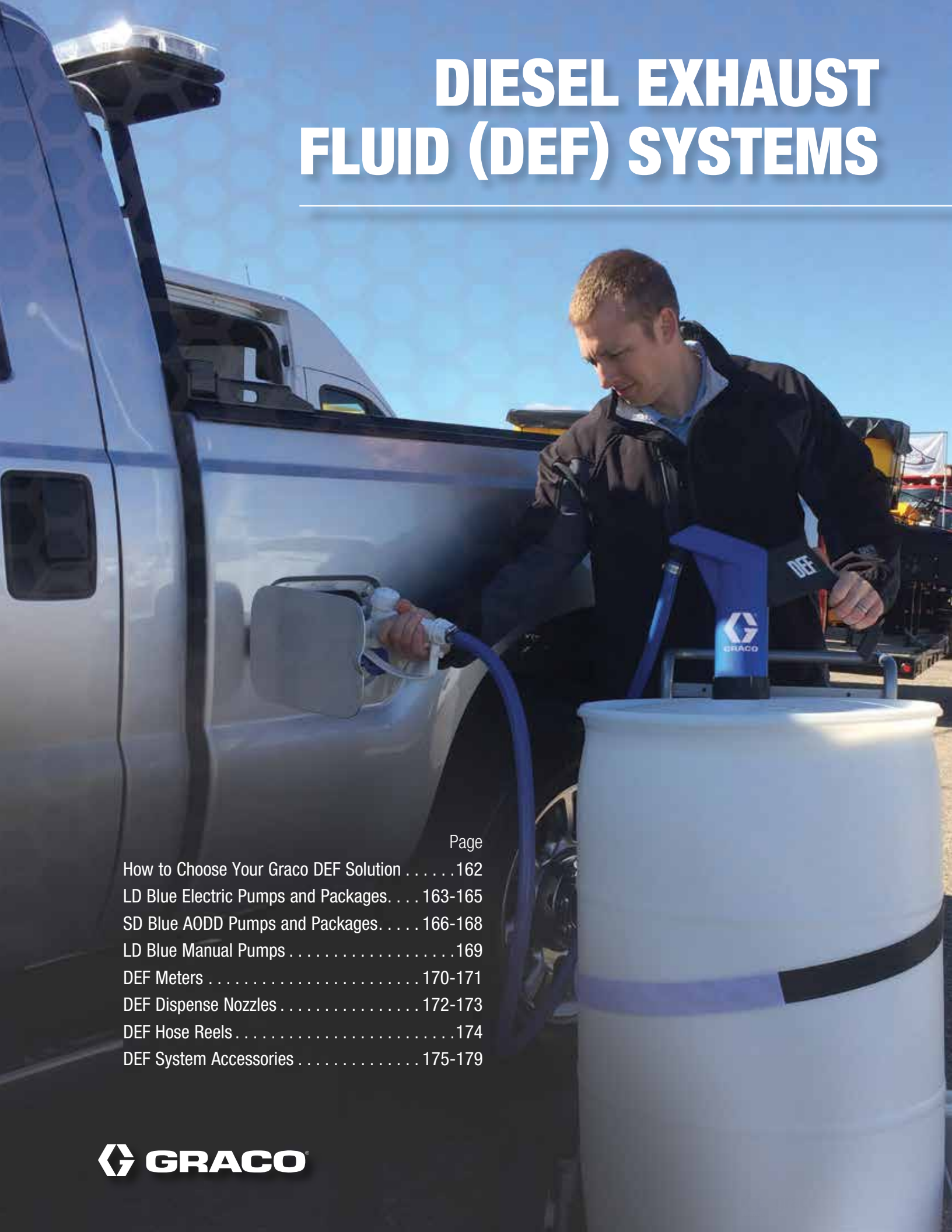

Page

How to Choose Your Graco DEF Solution 162
LD Blue Electric Pumps and Packages. . . . 163-165
SD Blue AODD Pumps and Packages. 166-168
LD Blue Manual Pumps 169
DEF Meters 170-171
DEF Dispense Nozzles 172-173
DEF Hose Reels 174
DEF System Accessories 175-179

GRACO®

Flexible Installation – Solutions for Every Application

Choose from configured packages or build a custom DEF system specific to your application with individual pumps and components. From the economical hand pumps to the high-performance electric or air-operated double diaphragm (AODD) packages, Graco has you covered. Every solution is designed with the highest-quality components for trouble-free operation.

Tote Mount

Drum Mount

Wall Mount

How to Choose Your Graco DEF Solution:

A Identify your power supply

Choose the pump that's right for your application. Choose the lightweight and reliable manual hand pump for small applications. The LD Blue electric pumps are recommended for applications up to 50 ft, or upgrade to the SD Blue AODD pump for longer applications, up to 200 ft.

B Determine your container size*

Whether dispensing from a drum or a tote container, Graco has the package that fits your needs. Fifty-five gallon drums are ideal for one or two truck operations, and for larger fleets choose 275 or 330 gallon IBC totes.

*Tote and drum not for sale from Graco

C Choose your accessories

Graco offers a full line of high-quality DEF accessories to complement your installation. Select from automatic or manual dispense nozzles, closed-system couplers, in-line meters, hose reels, mounting brackets, fittings, and dispense and suction hoses.

A Reliable Industrial Pump with Self-Priming Capabilities

Whether you own a small garage, large dealership or heavy equipment maintenance facility, Graco has a complete line of diesel exhaust fluid (DEF) products for every application. Our electric, pneumatic or manual products are engineered specifically for the advanced needs of DEF fluid and are designed to minimize downtime and dispense materials quickly without compromising chemical integrity.

2 Year Warranty!

Built-In Safety and Reliability

Automatic shut-off timer (6.5 min) incorporated into the 120V pump. Prevents the pump from running past the duty cycle and maximizes the life of the pump.

Stay Up and Running Longer

Reduce downtime and get more work done with the LD Blue systems – up to twice the life of competitive pumps.

Reduced Maintenance

Features a self-priming membrane pump that has no need for a dynamic seal, reducing the need for maintenance.

Typical Applications

- Automotive and heavy-duty dealerships
- Agriculture
- Service and fast lube centers
- Fleet service facilities

Typical Fluids Handled

- Diesel exhaust fluid

Technical Specifications

	120V	12V
Maximum Flow Rate	9 gpm	9.5 gpm
Maximum Fluid Pressure	50 psi	50 psi
RPM	1,750	2,600
Watts	500	260
Voltage	120V / 60hz	12V
Maximum Amperage	4.5A	22A
Duty Cycle	20 min ON/OFF	20 min ON/OFF
Listings	CRU US	CE

Ordering Information

Pump Only

Part Number	Description
127642	120V AC electric pump, 3/4 in barbed hose tail
127643	12V DC electric pump, 3/4 in barbed hose tail

Ordering Information

LD Blue Electric Pump Packages

Package Number	26C172	26C175	26C173	26C174
Mount Type	Tote	Tote	Tote	Tote
Voltage	12 VDC	120 VAC	12 VDC	120 VAC
Type of Nozzle	Automatic	Automatic	Automatic	Automatic
Nozzle	127655	127655	127655	127655
Pump	127643	127642	127643	127642
Bracket	Stainless steel	Stainless steel	Stainless steel	Stainless steel
Meter	127873	127873	–	–
1 in Elbow Fitting	127656	127656	–	–
Dispense Hose	127680	127680	127680	127680
Dispense Hose Length	20 ft	20 ft	20 ft	20 ft
Suction Hose	127679	127679	127679	127679
Suction Hose Length	5 ft	5 ft	5 ft	2 ft
Fittings (2)	SST clamps	SST clamps	SST clamps	SST clamps

Ordering Information

LD Blue Electric Pump Packages

Package Number	24V641	24V644	24V645	24V656	24V646
Mount Type	Tote	Tote	Tote	Drum	Tote
Voltage	120V	120V	120V	120V	12V
Type of Nozzle	Automatic	Manual	Automatic	Automatic	Automatic
Nozzle	127649	125078	127649	127649	127649
Pump	127642	127642	127642	127642	127643
Bracket	Stainless steel	Stainless steel	Stainless steel	Stainless steel	Stainless steel
Meter	127663	–	–	–	127663
1 in Elbow Fitting	127656	–	–	–	127656
Dispense Hose	24W161	24W161	24W161	24W161	24W161
Dispense Hose Length	20 ft	20 ft	20 ft	20 ft	20 ft
Suction Hose Length	5 ft	5 ft	5 ft	5 ft	5 ft
Fittings (2)	SST clamps	SST clamps	SST clamps	SST clamps	SST clamps

Package 24V646 installed on tote (not included in package).

Package 24V656 installed on 55 gallon drum (not included in package).

SD Blue Husky 515 Pump

Superior-Performing AODD Pump Capable of Higher Output Over Longer Runs

Whether for a small garage, large dealership or heavy equipment maintenance facility, our pneumatic pumps are engineered specifically for the advanced needs of DE fluid and are designed to minimize downtime and dispense materials quickly without compromising chemical integrity.

5 Year Warranty!

Modular Air Valve

Stall-free, low-pulsation air valve provides smooth and rapid changeover for increased efficiency and minimizes downtime.

Robust Design

Bolt-through fluid cover design eliminates leaks and provides better safety and more reliability.

Versatility

The Husky 515 pump delivers up to 15 gpm and works on as little as 30 psi.

Rugged Construction

Resists corrosion for reliable performance and long life.

Typical Applications

- Automotive and heavy-duty dealerships
- Mining
- Service and fast lube centers
- Fleet service facilities
- In-plant
- Lube trucks

Typical Fluids Handled

- Diesel exhaust fluid

Technical Specifications

Maximum Flow Rate	15 gpm
Maximum Fluid Pressure	50 psi
Air Operating Range	30-50 psi
Air Inlet	1/4 in NPT(F)
Pump Inlet	3/4 in BSPP(F)
Hose Inlet	3/4 in BSPP(F)
Pump Outlet	3/4 in BSPP(F)
Maximum Air Consumption	28 scfm

Ordering Information

Part Number	Description	Inlet/Outlet
24G745	SD Blue Husky 515 pump	3/4 in BSPP

Ordering Information

SD Blue Pump Tote Packages

	Deluxe		Standard	
Package Number	24F531	24F878	24V677	24V678
Mount Type	Tote/Wall	Tote/Wall	Tote/Wall	Tote/Wall
Type of Nozzle	Automatic	Automatic	Automatic	Automatic
Air-Operated Pump	24G745	24G745	24G745	24G745
Mounting Bracket	24F870	24F870	24W186	24W186
Valve/Nozzle	24F529	24F529	127649	127649
Meter	24G738	–	127663	–
Drum Quick Connect Kit	24F532	24F532	–	–
Air Regulator and Gauge	110147	110147	–	–
Air Shut-Off Ball Valve, Vented	110223	110223	–	–
50 psi Air Safety Valve	124963	124963	116306	116306
Dispense Hose	124603	124603	24W161	24W161
Dispense Hose Length	20 ft	20 ft	20 ft	20 ft
Suction Hose	124581	124581	24W149	24W149
Suction Hose Length	6 ft	6 ft	5 ft	5 ft
Fittings (2)	3/4 in BSPP(MBE)	3/4 in BSPP(MBE)	SST Clamps	SST Clamps

Package 24V677 installed on a 275 gallon tote (tote and coupler not included in package).

Ordering Information

SD Blue Pump Drum Packages

	Deluxe		Standard	
Package Number	24F947	24M499	24V679	24V686
Mount Type	Drum	Drum	Drum	Drum
Type of Nozzle	Manual	Automatic	Manual	Automatic
Air-Operated Pump	24G745	24G745	24G745	24G745
Mounting Bracket	24F679	24F679	24W185	24W185
Valve/Nozzle	125078	24F529	125078	127649
Meter	–	24H293	–	127663
Drum Quick Connect Kit	24F532	24F532	–	–
Air Regulator and Gauge	110147	110147	–	–
Air Shut-Off Ball Valve, Vented	110223	110223	–	–
50 psi Air Safety Valve	124963	124963	116306	116306
Dispense Hose	125079	124671	24W154	24W154
Dispense Hose Length	12 ft	12 ft	12 ft	12 ft
Suction Hose	124875	124875	24W148	24W148
Suction Hose Length	2 ft	2 ft	2 ft	2 ft
Fittings (2)	3/4 in BSPP(M)	3/4 in BSPP(M)	SST Clamps	SST Clamps

Package 24V686 installed on 55 gallon drum (not included in package).

LD Blue Manual Pumps

Features and Benefits

- Lightweight, reliable and cost-effective solution for dispensing DEF from 55 gallon drums
- Quick drum installation and change-out with integrated 2 inch bung adapter
- Fast delivery capable of 11 oz per stroke
- Adjustable telescoping downtube

Typical Applications

- Automotive and heavy-duty dealerships
- Agriculture
- Service and fast lube centers
- Fleet service facilities
- In-plant

Typical Fluids Handled

- Diesel exhaust fluid

Technical Specifications

Maximum Flow Rate	11 oz per stroke

Ordering Information

Part Number	Description
127647	DEF hand pump with drum-length adjustable downtube (125479)
24G636	DEF hand pump (127647), 6 ft dispense hose with ball valve (125478), drum length adjustable downtube (125479)
127875	DEF hand pump (127647), 6 ft dispense hose with ball valve (125478), drum length adjustable downtube (125479), LD manual nozzle (125078)

Accessories

Part Number	Description
125479	Drum length adjustable downtube for hand pump
125478	6 ft dispense hose with ball valve

SDI15 In-Line Meter

Features and Benefits

- Tracks totals in two modes – reset for periodic history and non-reset for meter life
- Durable design for rugged use
- Easy to use – dispenses pints, quarts, liters or gallons
- 0.5 gpm to 15 gpm flow rate
- 1500 psi maximum pressure, 1/2 in NPT inlet

Technical Specifications

Flow Range	0.5 gpm to 15 gpm (1.9 lpm to 57 lpm)
Maximum Working Pressure	1,500 psi (103 bar)
Units of Measure	Quarts, pints, gallons, liters (factory-set to quarts)
Weight	1.8 lb (0.8 kg)
Accuracy	± 2.5%
Inlet/Outlet	1/2 in BSPP
Maximum Totalizer	99,999
Maximum Recorded Dispense	999.99
Operating Temperature Range	-4°F to 122°F (-20°C to 50°C)
Storage Temperature Range	-13°F to 122°F (-25°C to 50°C)
Outdoor Use	No
Battery	2 AA alkaline
Wetted Parts	Stainless steel, PBT (polybutylene terephthalate), nickel, fluoroelastomer
Meter Pressure Loss	22 psi (1.5 bar) @ 14 gpm (53 lpm)
Instruction Manual	313048

Typical Applications

- Automotive and heavy-duty dealerships
- Mining
- Service and fast lube centers
- Fleet service facilities
- In-plant
- Lube trucks

Typical Fluids Handled

- Diesel exhaust fluid

Ordering Information

Part Number	Description
24G738	SDI15 DEF meter, 1/2 in BSPP(F/F), 1,500 psi, 0.5 to 15 gpm
24H293	SDI15 meter kit with fittings for SST auto nozzle. Includes SDI15 Meter (24G738), Swivel (124964), Nipple Fitting (24H292), Adapter Fitting (16G760) and Elastomeric Seal (124965).

LD Blue In-Line Meter

Features and Benefits

- Easy to install – use in-line or at the end of the dispense hose
- Impulse signals – single channel or reed switch
- 1.3 gpm to 26.4 gpm flow rate
- Rotatable display – 4 positions
- 1 in BSPP(M) inlet and outlet. Includes 1 in BSPP(F) coupler.

Technical Specifications

Flow Range	1.3 gpm to 26.4 gpm (4.9 lpm to 100 lpm)
Maximum Working Pressure	145 psi (10 bar)
Units of Measure	Quarts, pints, gallons, liters (factory-set to quarts)
Weight	0.6 lb (0.25 kg)
Accuracy	± 1.0%
Inlet/Outlet	1 in BSPP(M)
Maximum Totalizer	99,999
Maximum Recorded Dispense	999.99
Operating Temperature Range	14°F to 122°F (-10°C to 50°C)
Storage Temperature Range	-4°F to 158°F (-20°C to 70°C)
Outdoor Use	No
Battery	2AAA alkaline
Wetted Parts	SST, plastic, rubber
Meter Pressure Loss	5 psi (0.3 bar) @ 26.4 gpm (100 lpm)
Instruction Manual	333467

Typical Applications

- Automotive and heavy-duty dealerships
- Service and fast lube centers
- Fleet service facilities
- In-plant

Typical Fluids Handled

- Diesel exhaust fluid

Ordering Information

Part Number	Description
127663	LD digital in-line turbine meter, LCD display

Accessories

Part Number	Description
127800	Adapter – SD auto nozzle connection to LD meter

LD Blue Automatic Nozzles

Diesel Exhaust Fluid (DEF)

2 Year Warranty!

Features and Benefits

- Easy break-away system for low-cost repairs if the spout becomes detached
- Choose with or without built-in meter
- 4 gpm to12 gpm flow rate
- 50 psi maximum pressure
- 3/4 in BSPP inlet to transform nozzle into optional mis-filling system to prevent mis-fills
- Stainless steel spout

Technical Specifications

	Automatic Shut-Off Nozzle	Automatic Shut-Off Nozzle with Meter
Flow Range	4 gpm to 12 gpm (15 lpm to 45 lpm)	4 gpm to 12 gpm (15 lpm to 45 lpm)
Maximum Working Pressure	50 psi (3.5 bar)	50 psi (3.5 bar)
Units of Measure	–	Quarts, pints, gallons, liters (factory-set to quarts)
Weight	1.3 lb (0.6 kg)	1.8 lb (0.8 kg)
Accuracy	–	± 1%
Inlet	1 in BSP	1 in BSP
Maximum Totalizer	–	999,999
Maximum Recorded Dispense	–	99,999
Operating Temperature Range	-4°F to 130°F (-20°C to 55°C)	14°F to 122°F (-10°C to 50°C)
Storage Temperature Range	-40°F to 140°F (-40°C to 60°C)	-4°F to 158°F (-20°C to 70°C)
Outdoor Use	Yes	No
Battery	–	2AA alkaline
Wetted Parts	SST, rubber, plastic	SST, rubber, plastic
Meter Pressure Loss	13 psi (0.9 bar) @ 9.3 gpm (35 lpm)	13 psi (0.9 bar) @ 9.3 gpm (35 lpm)
Instruction Manual	333468	333469

Typical Applications

- Automotive and heavy-duty dealerships
- Service and fast lube centers
- Fleet service facilities
- In-plant

Typical Fluids Handled

- Diesel exhaust fluid

Ordering Information

Part Number	Description
127649	LD automatic nozzle with stainless steel breakaway spout
127650	LD automatic nozzle with built-in electronic turbine meter, with stainless steel breakaway spout

Accessories

	Part Number	Description
	127651	Spout replacement kit for LD nozzles 127649 and 127650
	127652	Magnetic mis-fill spout kit for LD automatic nozzles
	127654	Magnetic adapter for mis-fill kit

SD Blue Nozzle

Features and Benefits

- Heavy-duty design
- Automatic shut-off valve with stainless steel nozzle
- 11 gpm flow rate
- 50 psi maximum pressure
- 3/4 in BSPP inlet

Typical Applications

- Automotive and heavy-duty dealerships
- Mining
- Service and fast lube centers
- Fleet service facilities
- In-plant
- Lube trucks

Typical Fluids Handled

- Diesel exhaust fluid

Ordering Information

Part Number	Description
124398	SD automatic shut-off SST nozzle without swivel, 3/4 in BSPP(F)
24F529	SD automatic shut-off SST nozzle with swivel, 3/4 in BSPP(F)
127655	SD automatic shut-off SST nozzle, 3/4 in hose barb

LD Blue Manual Nozzle

Typical Applications

- Automotive and heavy-duty dealerships
- Service and fast lube centers
- Fleet service facilities
- In-plant

Typical Fluids Handled

- Diesel exhaust fluid

Features and Benefits

- Manual shut-off valve with stainless steel nozzle
- High 20 gpm flow rate
- 50 psi maximum pressure
- 3/4 in BSPP inlet
- Lightweight – under 1 lb

Ordering Information

Part Number	Description
125078	LD manual DEF nozzle with SST spout

XD 30 DEF Hose Reels

Features and Benefits

- For use with SD and LD pumps (LD pump with manual nozzle only)
- Stainless steel fluid section with open porting ensures high fluid flow with minimal pressure loss
- Flexible positioning of guide arm for mounting on bench, ceiling, wall, tote or utility truck
- 50 psi maximum pressure
- 3/4 in x 50 ft inlet hose with 3/4 in BSPP(M) swivel connection to provide leak-free connection

Typical Applications

- Automotive and heavy-duty dealerships
- Mining
- Service and fast lube centers
- Fleet service facilities
- In-plant
- Lube trucks

Typical Fluids Handled

- Diesel exhaust fluid

Technical Specifications

Operating Temperature Range	12°F to 140°F (-11°C to 60°C)
Maximum Working Pressure	50 psi (3.5 bar)
Wetted Parts (Bare Reel Only)	Zinc plated steel, polyurethane, steel
Weight (Without hose)	98 lb (44.5 kg)
Sound Pressure Level	85.8 dB (A)
Sound Power Level	94.9 dB (A)
Instruction Manual	3A0138

Ordering Information

Hose Reels

Part Number	Description
HSDD5A	XD 30 DEF hose reel, 3/4 in x 50 ft, white, BSPP
HSDD5B	XD 30 DEF hose reel, 3/4 in x 50 ft, blue, BSPP
HSDD5F	XD 30 DEF hose reel, 3/4 in x 50 ft, yellow, BSPP
HSDDDA	XD 30 DEF hose reel, bare, white, BSPP
HSDDDB	XD 30 DEF hose reel, bare, blue, BSPP
HSDDDF	XD 30 DEF hose reel, bare, yellow, BSPP

Hose Reel Inlet Kits

A hose inlet kit is required when ordering an XD reel.

Part Number	Description
24W250	2 ft DEF inlet hose kit for XD 30 reels. 3/4 in BSPP(F) x cut end and 90º elbow.
24W251	6 ft DEF inlet hose kit for XD 30 reels. 3/4 in BSPP(F) x cut end and 90º elbow.
124875	2 ft DEF hose, 3/4 in BSPP(M) x cut end (inlet hose)
124581	6 ft DEF hose, 3/4 in BSPP(M) x cut end (inlet hose)

Ordering Information

Mounting Brackets

Part Number	Description
24F870	AODD tote/wall mounting bracket with nozzle holder
24F679	AODD drum mounting bracket with nozzle holder
124541	AODD nozzle bath holder

Dispense and Suction Hoses

	Part Number	Description
Standard	24W148	2 ft suction hose kit with (2) hose clamps
	24W149	5 ft suction hose kit with (2) hose clamps
	24W190	6 ft dispense hose kit with (2) hose clamps
	24W154	12 ft dispense hose kit with (2) hose clamps
	24W161	20 ft dispense hose kit with (2) hose clamps
Deluxe	124875	2 ft suction hose, 3/4 in BSPP(M) x cut end (inlet hose)
	124581	6 ft suction hose, 3/4 in BSPP(M) x cut end (inlet hose)
	124671	12 ft dispense hose, 3/4 in BSPP x 3/4 in BSPP
	125079	12 ft dispense hose, 3/4 in BSPP x cut end
	124603	20 ft dispense hose, 3/4 in BSPP x 3/4 in BSPP
	125074	20 ft dispense hose, 3/4 in BSPP x cut end
	125242	50 ft dispense hose, 3/4 in BSPP x 3/4 in BSPP

Pump Handle

Part Number	Description
127646	Black handle for 12V DC pump

Ordering Information

Fittings

	Part Number	Description
	127656	1 in BSP(F) elbow fitting, black
	127657	1 in BSP(F) x 3/4 in barb hose tail, black
	127720	1 in BSP(F) x 1 in BSP(F) linear socket, black
	127804	3/4 in x 1 in BSPP(F) swivel fitting with seals
	127805	1 in BSPP(F) x 1 in BSPP(F) coupler
	127806	1 in BSPP(M/F) swivel, white
	127815	3/4 in BSP x 3/4 in barb SST swivel hose tail
	127823	1 in BSP x 3/4 in barb elbow, white
	116306	1/4 in NPT, 50 psi air safety valve for Standard AODD pump packages
	124963	1/8 in NPT, 50 psi air safety valve for Deluxe AODD pump packages
	24F524	3/4 in BSPP(M) x 3/4 in BSPP(F) SST swivel

Closed-System Coupler Accessories

Ordering Information

Maintaining fluid purity is essential to the longevity of your equipment and maintaining selective catalytic reduction (SCR) engines. With a closed-system design you can minimize fluid contamination and prevent spills. Choose from a variety of industry-accepted closed-system inlet kits to best suit your needs.

Colder

DrumQuick® PRO Quick Connect Coupler System. Economical polypropylene assembly can withstand thousands of quick and fast connections.

	Part Number	Description
	24F532	Colder closed-system coupler kit – includes drum coupler (124548), drum insert (124549) and downtube (124550)
	124548	Colder closed-system drum coupler
	124549	Colder closed-system drum insert
	125014	Colder closed-system drum insert with buttress thread
	124550	Colder closed-system 47 in downtube

DrumQuick® is a registered trademark of Colder Products Company.

Ordering Information

Micro Matic

Reusable Stainless Valve (RSV) is ideal for multi-use applications and is simple to integrate with drums, totes and custom packages.

Economic Plastic Valve (EPV™) is designed for one-way, single-use applications. Engineered for use when operations require the container package to be used once, emptied and recycled.

	Part Number	Description
	17C907	Micro Matic EPV dispense coupler, 3A orange, 3/4 in barbed outlet, EPDM seals
	127634	Micro Matic EPV container valve, 3A orange, 2.5 in x 5 buttress, EPDM Seals
	127793	Micro Matic EPV downtube for 55 gal drum
	127794	Micro Matic EPV center downtube for 275 gal IBC tote
	127635	Micro Matic EPV center downtube for 330 gal IBC tote
	17C908	Micro Matic RSV dispense coupler, 3/4 in barbed outlet, 4 pin, stainless steel
	127637	Micro Matic RSV container valve, 2.5 in x 5 in, 4 cam, stainless steel valve, EPDM seals
	127795	Micro Matic RSV downtube for 55 gal drum
	127796	Micro Matic RSV center downtube for 275 gal IBC tote
	127639	Micro Matic RSV center downtube for 330 gal IBC tote
	127640	Micro Matic RSV fill coupler, 1 in NPT(M) inlet x 1/4 in NPT(F) outlet, 4 pin, stainless steel

EPV™ is a trademark of Micro Matic USA, Inc.

Ordering Information

Micro Matic Packages

Includes coupler, valve and downtube.

	Part Number	Description
	24W142	Micro Matic EPV suction package – coupler (17C907), container valve (127634), 55 gal downtube (127793)
	24W141	Micro Matic EPV suction package – coupler (17C907), container valve (127634), 275 gal downtube (127794)
	24W140	Micro Matic EPV suction package – coupler (17C907), container valve (127634), 330 gal downtube (127635)
	24W145	Micro Matic RSV suction package – coupler (17C908), container valve (127637), 55 gal downtube (127795)
	24W144	Micro Matic RSV suction package – coupler (17C908), container valve (127637), 275 gal downtube (127796)
	24W143	Micro Matic RSV suction package – coupler (17C908), container valve (127637), 330 gal downtube (127639)

Notes

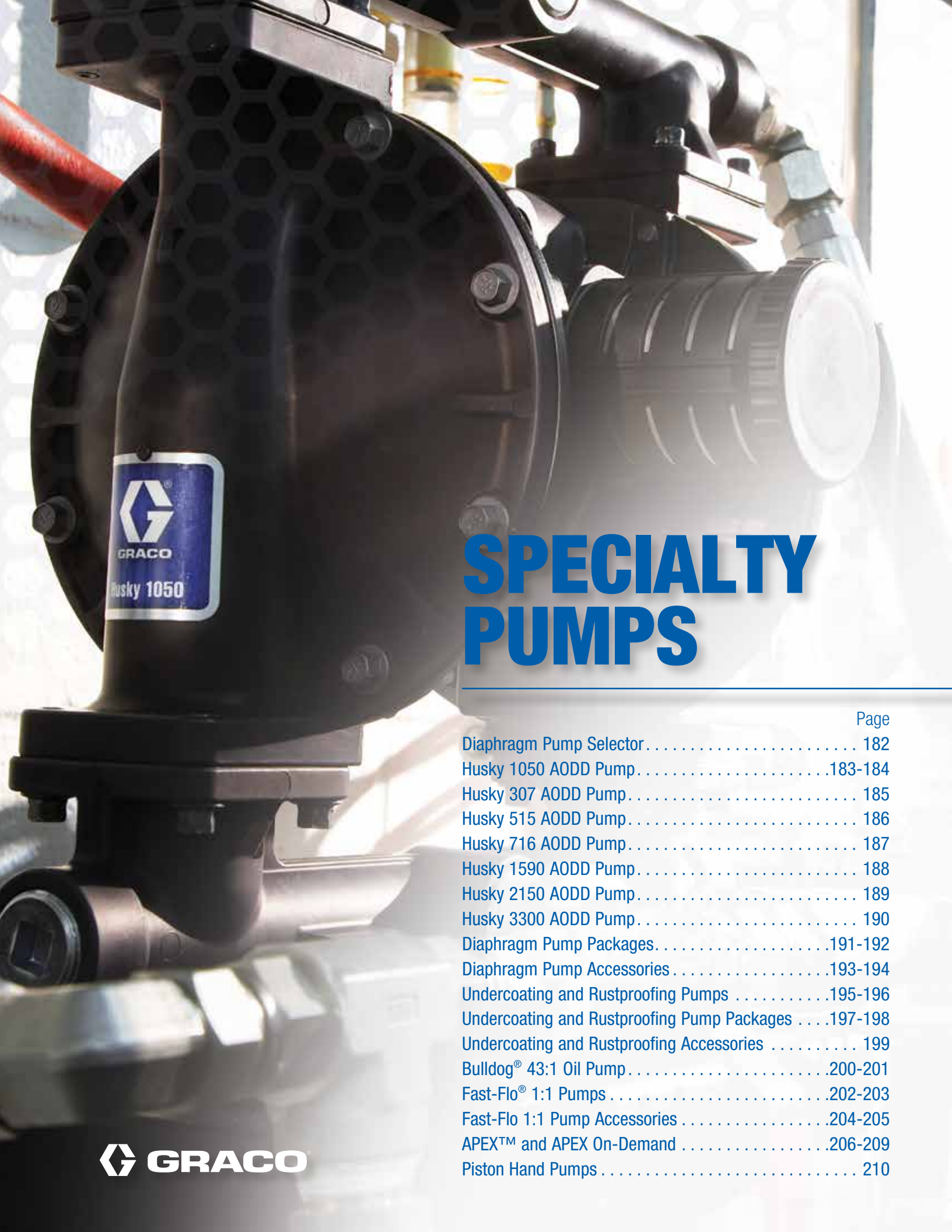

SPECIALTY PUMPS

	Page
Diaphragm Pump Selector	182
Husky 1050 AODD Pump	183-184
Husky 307 AODD Pump	185
Husky 515 AODD Pump	186
Husky 716 AODD Pump	187
Husky 1590 AODD Pump	188
Husky 2150 AODD Pump	189
Husky 3300 AODD Pump	190
Diaphragm Pump Packages	191-192
Diaphragm Pump Accessories	193-194
Undercoating and Rustproofing Pumps	195-196
Undercoating and Rustproofing Pump Packages	197-198
Undercoating and Rustproofing Accessories	199
Bulldog® 43:1 Oil Pump	200-201
Fast-Flo® 1:1 Pumps	202-203
Fast-Flo 1:1 Pump Accessories	204-205
APEX™ and APEX On-Demand	206-209
Piston Hand Pumps	210

GRACO

Diaphragm Pump Selection Guide

Oil | Fuel | Water | Anti-Freeze | Washer Fluid

Husky Series	Part Number	Pump Description	Fluids	Listings	Max PSI	Reference Pages
Husky 307	D31255	Husky 307 Acetal – 3/8 in Acetal/TPE	• Oil evacuation • Oil transfer • Water • Anti-freeze • Windshield wash fluid	–	100 psi (6.9 bar)	185
Husky 515	243669	Husky 515 Acetal Split Inlet – 3/4 in Acetal/Buna Dual Inlet	• 50/50 windshield wash solution • Water • Anti-freeze	–	100 psi (6.9 bar)	186
Husky 716	241906	Husky 716 Aluminum – 3/4 in Aluminum/Buna-N	• Oil evacuation • Oil transfer • Water • Anti-freeze • Windshield wash fluid	–	100 psi (6.9 bar)	187
Husky 1050	647016	Husky 1050 Aluminum – 1 in Aluminum/TPE	• Water • Anti-freeze • Fuel transfer • Gasoline (up to 10% ethanol)	UL	100 psi (6.9 bar)	183-184
Husky 1050	647731	Husky 1050 Aluminum – 1 in Aluminum/Buna-N	• Oil evacuation • Oil transfer	UL	100 psi (6.9 bar)	183-184
Husky 1050	647648	Husky 1050 Aluminum – 1 in Aluminum/TPE	• Fuel dispense • Gasoline (up to 10% ethanol)	UL	50 psi (3.5 bar)	183-184
Husky 1590	DB3525	Husky 1590 Aluminum – 1.5 in Aluminum/TPE	• Oil evacuation • Oil transfer • Water • Anti-freeze	–	120 psi (8.3 bar)	188
Husky 2150	DF3525	Husky 2150 Aluminum – 2 in Aluminum/TPE	• Oil evacuation • Oil transfer • Water • Anti-freeze	–	120 psi (8.3 bar)	189
Husky 3300	652002	Husky 3300 Aluminum – 3 in Aluminum/TPE	• Oil evacuation • Oil transfer • Water • Anti-freeze	–	125 psi (8.6 bar)	190

UL Listed!

Efficiency, Performance and Best-in-Class Engineering

Husky pneumatic double-diaphragm pumps feature a stall-free, low-pulsation air valve, which provides a smooth and rapid changeover. Typical applications include oil transfer and evacuation, fuel dispense and transfer, windshield wash solution dispense, and water and anti-freeze dispense. Some models UL-approved for use in pumping gasoline and gasoline/alcohol blends up to 10% ethanol, diesel fuel, fuel oil and lubricating oil.

Modular Air Valve

Stall-free, low-pulsation operation provides smooth and rapid changeover

One-Piece Center Section

Eliminates air leaks for more efficient operation

Longer Diaphragm Life

Up to 5x longer diaphragm life for less maintenance and downtime

Four-Bolt Joint Design

Bolted design provides even sealing pressure for leak-free operation

Multiple Ports

Increased number of ports for installation flexibility

Typical Applications

- Automotive dealerships
- Fast lube centers
- Service shops
- Heavy-duty dealerships
- Fleet services facilities
- In-plant
- Lube trucks
- Mining

Typical Fluids Handled

- Oil
- Fuel
- Water
- Anti-freeze
- Washer fluid

Pump Performance

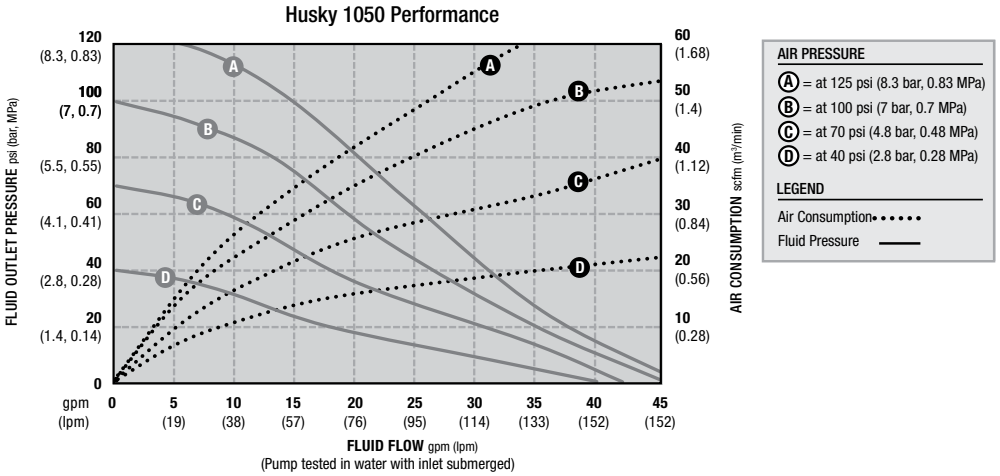

Husky 1050 AODD Pump

Oil | Fuel | Water | Anti-Freeze | Washer Fluid

Technical Specifications

Maximum fluid working pressure	
Transfer Pump	100 psi (6.9 bar, 0.69 MPa)
Fuel Dispense Pump	50 psi (3.5 bar, 0.35 MPa)
Air pressure operating range	
Transfer Pump	20 psi to 100 psi (1.4 bar to 6.9 bar, 0.14 MPa to 0.69 MPa)
Fuel Dispense Pump	0 psi to 50 psi (1.4 bar to 3.5 bar, 0.14 MPa to 0.35 MPa)
Air consumption at 70 psi (0.48 MPa, 4.8 bar), 20 gpm (76 lpm)	25 scfm
Air consumption at 50 psi (0.35 MPa, 3.5 bar), full flow	25 scfm
Fluid displacement per cycle	0.17 gal (0.64 l)
Maximum values with water as media under submerged inlet conditions at ambient temperature:	
Maximum air consumption	64 scfm
Maximum free-flow delivery	
Transfer Pump	50 gpm (189 lpm)
Fuel Dispense Pump	38 gpm (144 lpm)
Maximum pump speed	
Transfer Pump	275 cpm
Fuel Dispense Pump	210 cpm
Maximum suction lift (varies widely based on ball/seat selection and wear, operating speed, material properties and other variables)	16 ft (4.9 m) dry, 29 ft (8.8 m) wet
Maximum-size pumpable solids	1/8 in (3.2 mm)
Recommended cycle rate for continuous use	93 cpm to 140 cpm
Recommended cycle rate for circulation systems	20 cpm
Sound Power*	
at 70 psi (0.48 MPa, 4.8 bar) and 50 cpm	78 dB(A)
at 100 psi (0.7 MPa, 7.0 bar) and full flow	90 dB(A)
Sound Pressure**	
at 70 psi (0.48 MPa, 4.8 bar) and 50 cpm	84 dB(A)
at 100 psi (0.7 MPa, 7.0 bar) and full flow	96 dB(A)
Operating temperature range	10°F to 150°F (-12°C to 65°C)
Air inlet size	1/2 in NPT(F)
Fluid inlet size	1 in NPT(F)
Fluid outlet size	1 in NPT(F)
Weight	23 lb (10.5 kg)
Wetted parts	Aluminum, TPC-ET, acetal, PTFE, Buna-N
Non-wetted external parts	Aluminum, coated carbon steel
Instruction manual	313597

*Sound power measured per ISO-9614-2.

**Sound pressure was tested 3.28 ft (1 m) from equipment.

Ordering Information

Husky 1050 AODD Pumps

Part Number	Description	Maximum Fluid Working Pressure	Fluids Handled
647016	Husky 1050 Aluminum Pump – 1 in, Aluminum/TPE	100 psi (6.9 bar)	Water / anti-freeze / fuel transfer
647731	Husky 1050 Aluminum Pump – 1 in, Aluminum/Buna-N	100 psi (6.9 bar)	Oil evacuation / oil transfer
647648	Husky 1050 Aluminum Pump – 1 in, Aluminum/TPE	50 psi (3.5 bar)	Fuel dispense

Husky 307 AODD Pump

- 3/8 in fluid connections
- Fluid delivery up to 7 gpm (26.5 lpm)
- Operate as low as 20 psi up to 100 psi for max flow
- Maximum working pressure of 100 psi for long line runs
- End porting available
- High-efficiency air valve operates at maximum of 6 scfm
- Groundable to reduce risk of static and electric shock

Technical Specifications

Maximum fluid working pressure	100 psi (6.9 bar, 0.69 MPa)
Maximum free-flow delivery*	7.0 gpm (26.5 lpm)
Maximum pump speed	330 cpm
Fluid displacement per cycle**	0.02 gal (0.076 l)
Maximum suction lift	12 ft (3.7 m) dry
Maximum-size pumpable solids	0.06 in (1.5 mm)
Maximum ambient operating temperature***	180°F (82.2°C)
Maximum diaphragm operating temperature***	150°F (65.6°C)
Typical sound level at 50 psi (3.5 bar, 0.35 MPa) air @ 50 cpm	75 dB(A)
Maximum air consumption	6 scfm (0.17 m^3/min)
Air pressure operating range	20 psi to 100 psi (1.4 bar to 6.9 bar, 0.14 MPa to 0.69 MPa)
Air inlet size	1/4 NPT(F) or BSPT(F)
Fluid inlet size	3/8 NPT(F)
Fluid outlet size	3/8 NPT(F)
Weight	5.2 lb (2.4 kg)
Wetted parts	Acetal with stainless steel fibers, PTFE
Instruction manual	308553

*Flow rates are with muffler and do not vary based on diaphragm material. **Displacement per cycle may vary based on suction condition, discharge head, air pressure and fluid type. ***Actual pump performance may be affected by prolonged usage at temperature.

Ordering Information

Husky 307 AODD Pump

Part Number	Description
D31255	Husky 307 Acetal Pump – 3/8 in, Acetal/TPE

Pump Performance

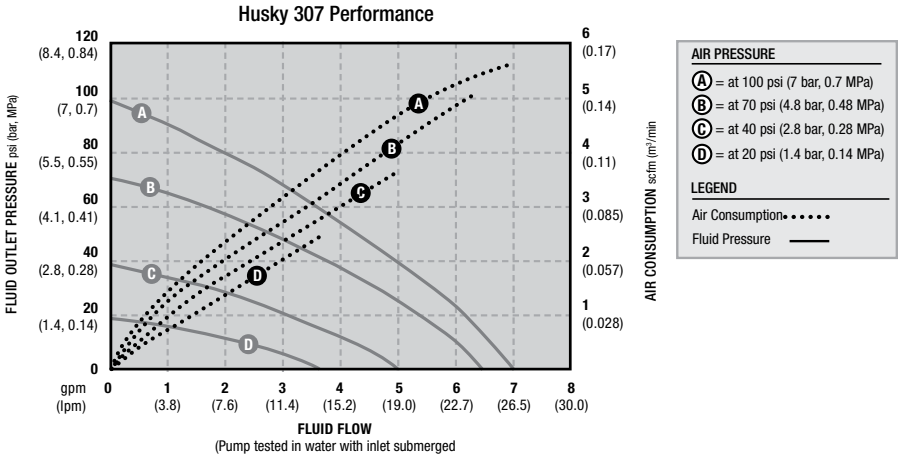

Oil | Water | Anti-Freeze | Washer Fluid

Husky 515 AODD Pump

- 1/2 in fluid connections
- Fluid delivery up to 15 gpm (56.7 lpm)
- Operate as low as 30 psi up to 100 psi for max flow
- Maximum working pressure of 100 psi for long line runs
- Center and end porting options available
- High-efficiency air valve operates at maximum of 28 scfm
- Groundable to reduce risk of static and electric shock

Technical Specifications

Maximum fluid working pressure	100 psi (6.9 bar, 0.69 MPa)
Maximum free-flow delivery*	15 gpm (57 l/min)
Maximum pump speed	400 cpm
Fluid displacement per cycle**	0.04 gal (0.15 l)
Maximum suction lift	15 ft (4.5 m) dry, 25 ft (7.6 m) wet
Maximum-size pumpable solids	3/32 in (2.5 mm)
Maximum ambient operating temperature***	180°F (82.2°C)
Maximum diaphragm operating temperature***	180°F (82.2°C)
Typical sound level at 70 psi (4.8 bar, 0.48 MPa) air @ 50 cpm	77 dB(A)
Maximum air consumption	28 scfm (0.672 m^3/min)
Air pressure operating range	30 psi to 100 psi (2.1 bar to 6.9 bar, 0.21 MPa to 0.69 MPa)
Air inlet size	1/4 NPT(F)
Fluid inlet size	3/4 in NPT(F)
Fluid outlet size	1/2 and 3/4 in NPT(F)
Weight	7.8 lb (3.5 kg)
Wetted parts	Groundable acetal, Buna-N, PTFE
Instruction manual	309204

*Flow rates are with muffler and do not vary based on diaphragm material. **Displacement per cycle may vary based on suction condition, discharge head, air pressure and fluid type. ***Actual pump performance may be affected by prolonged usage at temperature.

Ordering Information

Husky 515 AODD Pump

Part Number	Description
243669	Husky 515 Acetal Split Inlet – 3/4 in, Acetal/Buna Dual Inlet

Pump Performance

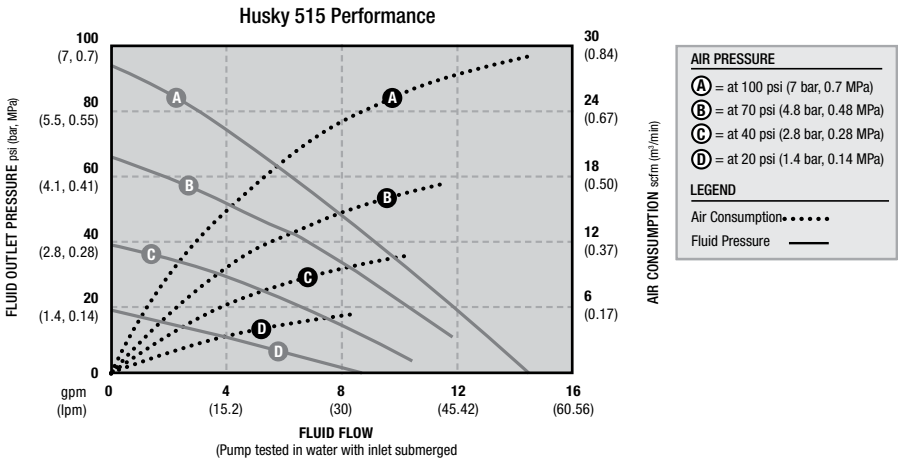

Specialty Pumps

Husky 716 AODD Pump

- 3/4 in fluid connections
- Fluid delivery up to 16 gpm (60.6 lpm)
- Operate as low as 30 psi up to 100 psi for max flow
- Maximum working pressure of 100 psi for long line runs
- Center and end porting options available
- High-efficiency air valve operates at maximum of 28 scfm
- Groundable to reduce risk of static and electric shock

Technical Specifications

Maximum fluid working pressure	100 psi (6.9 bar, 0.69 MPa)
Maximum free-flow delivery*	16 gpm (61 l/min)
Maximum pump speed	400 cpm
Fluid displacement per cycle**	0.04 gal (0.15 l)
Maximum suction lift	15 ft (4.5 m) dry, 25 ft (7.6 m) wet
Maximum-size pumpable solids	3/32 in (2.5 mm)
Maximum ambient operating temperature***	180°F (82.2°C)
Maximum diaphragm operating temperature***	180°F (82.2°C)
Typical sound level at 70 psi (4.8 bar, 0.48 MPa) air @ 50 cpm	77 dB(A)
Maximum air consumption	28 scfm (0.672 m^3/min)
Air pressure operating range	25 psi to 100 psi (1.8 bar to 6.9 bar, 0.18 MPa to 0.69 MPa)
Air inlet size	1/4 NPT(F)
Fluid inlet size	3/4 in NPT(F)
Fluid outlet size	3/4 in NPT(F)
Weight	8.5 lb (3.9 kg)
Wetted parts	Buna-N, acetal, aluminum, stainless steel, PTFE, zinc-plated steel
Instruction manual	308573

*Flow rates are with muffler and do not vary based on diaphragm material. **Displacement per cycle may vary based on suction condition, discharge head, air pressure and fluid type. ***Actual pump performance may be affected by prolonged usage at temperature.

Ordering Information

Husky 716 AODD Pump

Part Number	Description
241906	Husky 716 Aluminum – 3/4 in, Aluminum/Buna-N

Pump Performance

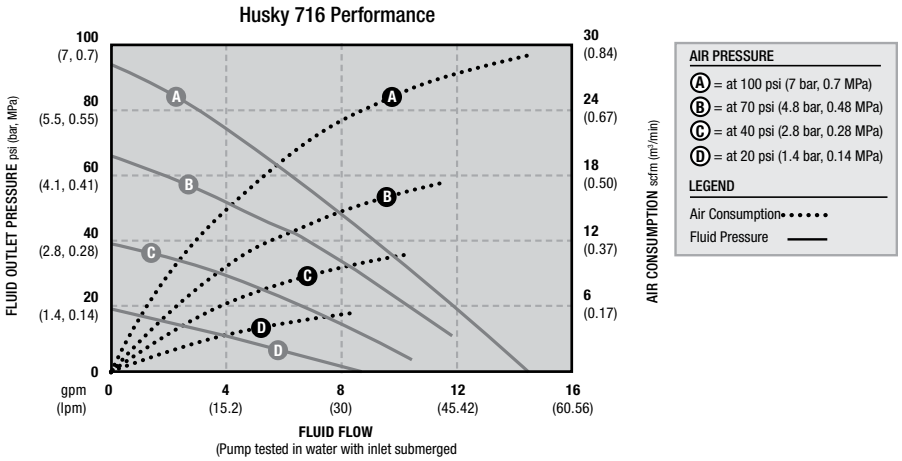

Specialty Pumps

Oil | Water | Anti-Freeze | Washer Fluid

Husky 1590 AODD Pump

- 1-1/2 in fluid connections
- Fluid delivery up to 90 gpm (340.7 lpm)
- Operate as low as 20 psi up to 120 psi for max flow
- Maximum working pressure of 120 psi for long line runs
- End porting available
- High-efficiency air valve operates at maximum of 125 scfm
- Groundable to reduce risk of static and electric shock

Technical Specifications

Maximum fluid working pressure	120 psi (8.4 bar, 0.84 MPa)
Maximum free-flow delivery*	100 gpm (378.5 l/min)
Maximum pump speed	200 cpm
Fluid displacement per cycle**	0.5 gal (1.96 l)
Maximum suction lift	20 ft (6.1 m) dry
Maximum-size pumpable solids	0.19 in (4.8 mm)
Maximum ambient operating temperature***	150°F (65.5°C)
Maximum diaphragm operating temperature***	150°F (65.5°C)
Typical sound level at 70 psi (4.8 bar, 0.48 MPa) air @ 125 cpm	77 dB(A)
Maximum air consumption	125 scfm (3.5 m^3/min)
Air pressure operating range	20 psi to 100 psi (1.4 bar to 6.9 bar, 0.14 MPa to 0.69 MPa)
Air inlet size	1/2 NPT(F)
Fluid inlet size	1-1/2 NPT(F) or BSPT(F)
Fluid outlet size	1-1/2 NPT(F) or BSPT(F)
Weight	33.5 lb (15.2 kg)
Wetted parts	Acetal, aluminum, TPE, PTFE
Instruction manual	308441

*Flow rates are with muffler and do not vary based on diaphragm material. **Displacement per cycle may vary based on suction condition, discharge head, air pressure and fluid type. ***Actual pump performance may be affected by prolonged usage at temperature.

Ordering Information

Husky 1590 AODD Pump

Part Number	Description
DB3525	Husky 1590 Aluminum – 1.5 in, Aluminum/TPE

Pump Performance

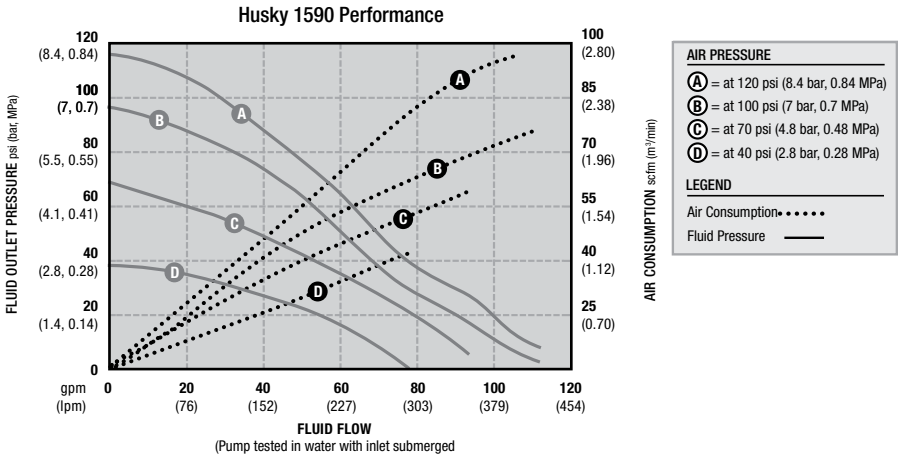

Husky 2150 AODD Pump

- 2 in fluid connections
- Fluid delivery up to 150 gpm (567.8 lpm)
- Operate as low as 20 psi up to 120 psi for max flow
- Maximum working pressure of 120 psi for long line runs
- End porting available
- High-efficiency air valve operates at maximum of 175 scfm
- Groundable to reduce risk of static and electric shock

Technical Specifications

Maximum fluid working pressure	120 psi (8.4 bar, 0.84 MPa)
Maximum free-flow delivery*	150 gpm (568 l/min)
Maximum pump speed	145 cpm
Fluid displacement per cycle**	1.03 gal (3.9 l)
Maximum suction lift	20 ft (6.1 m) dry
Maximum-size pumpable solids	0.25 in (6.3 mm)
Maximum ambient operating temperature***	150°F (65.5°C)
Maximum diaphragm operating temperature***	150°F (65.5°C)
Typical sound level at 70 psi (4.8 bar, 0.48 MPa) air @ 125 cpm	78 dB(A)
Maximum air consumption	175 scfm (4.9 m^3/min)
Air pressure operating range	20 psi to 120 psi (1.4 bar to 8.4 bar, 0.14 MPa to 0.84 MPa)
Air inlet size	1/2 NPT(F)
Fluid inlet size	2 in NPT(F)
Fluid outlet size	2 in NPT(F)
Weight	58 lb (26.3 kg), 62 lb (28.1 kg) – Extended
Wetted parts	Acetal, aluminum, TPE, PTFE
Instruction manual	308368

*Flow rates are with muffler and do not vary based on diaphragm material. **Displacement per cycle may vary based on suction condition, discharge head, air pressure and fluid type. ***Actual pump performance may be affected by prolonged usage at temperature.

Ordering Information

Husky 2150 AODD Pump

Part Number	Description
DF3525	Husky 2150 Aluminum – 2 in, Aluminum/TPE

Pump Performance

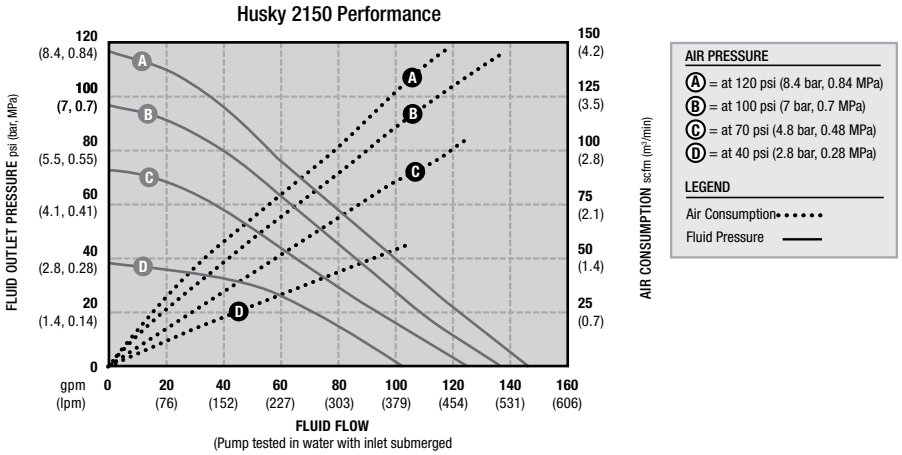

Specialty Pumps

Oil | Water | Anti-Freeze | Washer Fluid

Husky 3300 AODD Pump

- 3 in fluid connection
- Fluid delivery up to 300 gpm (1,135.6 lpm)
- Operate as low as 20 psi up to 125 psi for max flow
- Maximum working pressure of 125 psi for long line runs
- Rotatable center porting available
- High-efficiency air valve operates at maximum of 335 scfm
- Groundable to reduce risk of static and electric shock

Technical Specifications

Maximum fluid working pressure	125 psi (8.4 bar, 0.84 MPa)
Maximum free-flow delivery*	300 gpm (1,135 l/min)
Maximum pump speed	103 cpm
Fluid displacement per cycle**	2.9 gal (11 l)
Maximum suction lift	8 ft (2.4 m) dry, 28 ft (8.5 m) wet
Maximum-size pumpable solids	0.5 in (13 mm)
Maximum ambient operating temperature***	150°F (65.5°C)
Maximum diaphragm operating temperature***	150°F (65.5°C)
Typical sound level at 50 psi (3.4 bar, 0.34 MPa) air @ 50 cpm	92 dB(A)
Maximum air consumption	335 scfm (9.5 m^3/min)
Air pressure operating range	20 psi to 125 psi (1.4 bar to 8.6 bar, 0.14 MPa to 0.86 MPa)
Air inlet size	3/4 NPT(F)
Fluid inlet size	3 in (76.2 mm) NPT or BSPT with ANSI/DIN flange
Fluid outlet size	3 in NPT(F) or BSPT(F)
Weight	150 lb (68 kg)
Wetted parts	Acetal, aluminum, carbon-coated steel, TPE
Instruction manual	3A0410

*Maximum values with water as media at ambient temperature. Water level is approximately 3 ft above pump inlet.
**Startup pressures and displacement per cycle may vary based on suction condition, discharge head, air pressure and fluid type.
***Sound power measured per ISO-9614-2. Sound pressure was tested 3.28 ft (1 m) from equipment.

Ordering Information

Husky 3300 AODD Pump

Part Number	Description
652002	Husky 3300 Aluminum – 3 in, Aluminum/TPE

Pump Performance

Husky 3300 Performance

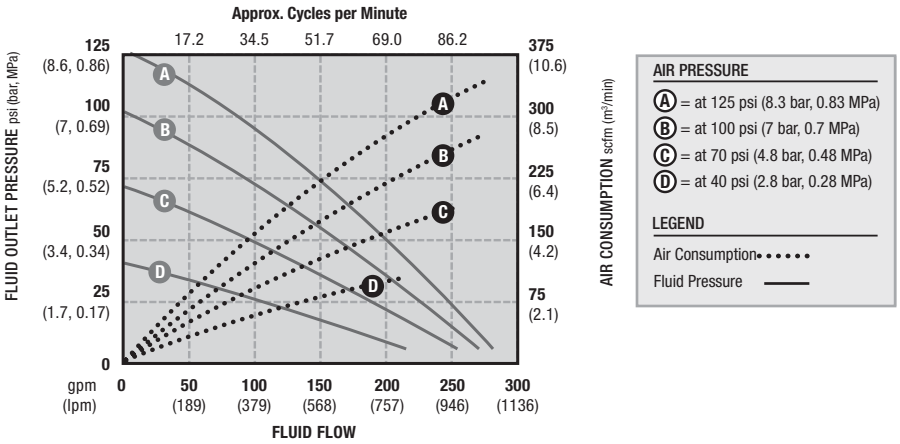

Ordering Information

Pre-Mixed Windshield Wash Solvent and Coolant Dispense

Package Number		237161
Pump Type		Husky 307
Pump		D31255
Installation Kit		237160
Installation Kit Includes	Air Filter	110146
	Air Gauge	108190
	Air Regulator	110318
	Fluid Connect Hose – 4 ft	220596
	Air Connect Hose – 6 ft	109125
	Mounting Bracket	190125
	Suction Kit	223888
Wall Bracket Kit		224835
Instruction Manual		308426

Anti-Freeze
Washer Fluid

Ordering Information

Bulk Anti-Freeze and Windshield Solvent Transfer Packages

Package Number	244679	244680	244681	244682
Pump Type	Husky 1050 – Dual Inlet	Husky 1050 – Single Inlet	Husky 515 – Dual Inlet	Husky 716 – Single Inlet
Pump	647016	647016	243669	241906
Air Regulator	244844	244844	110147	110147
Fluid Connect Hose	115042	115042	109105	109105
Air Connect Hose	205418	205418	109125	109125
Air Shut-Off Valve	110225	110225	110223	110223
Wall Mount Bracket	24C637	24C637	224835	224835
Dual Inlet Manifold	24D147	–	–	–
Suction Kit	(2) 236054	236054	(2) 236054	236054
Thermal Relief Kit	238428	238428	238428	238428
Instruction Manual	309353	309353	309353	309353

Air Line Filters

Husky Pump	307	515/716	1050	1590	2150	3300
Part Number	110146	110146	106148	106149	106150	106150

Air Regulator and Gauge

Husky Pump	307	515/716	1050	1590	2150	3300
Part Number	110147	110147	246946	202858	206199	207651

Air Quick-Connect Coupler

Husky Pump	307	515/716	1050	1590	2150	3300
Part Number	208536	208536	110199	110199	110199	110200

Air Quick-Connect Nipple

Husky Pump	307	515/716	1050	1590	2150	3300
Part Number	169970	169970	110196	110196	110196	110197

Bleed-Type Air Valve

Husky Pump	307	515/716	1050	1590	2150	3300
Part Number	110223	110223	110224	110225	110225	110226

Dual-Inlet Manifold

Husky Pump	307	515	1050	1590	2150	3300
Part Number	237211	194347	24D205	–	–	–

Grounding Wire and Clamp

Husky Pump	307	515/716	1050	1590	2150	3300
Part Number	222011	222011	238909	222011	238909	238909

Suction Hose Kit

Husky Pump	307	515/716	1050	1590	2150	3300
Part Number	236054	236054	236054	222916	222916	–

Diaphragm Pump Accessories

Thermal Relief Kit

Husky Pump	307	515/716	1050	1590	2150	3300
Part Number	238899	238428	238428	–	–	–

Thermal Relief Valves – 150 psi (10.3 bar)

Husky Pump	307	515/716	1050	1590	2150	3300
Part Number	113497 al/bn, 112119 ss/tf					

Wall Bracket

Husky Pump	307	515/716	1050	1590	2150	3300
Part Number	224835	224835	24C637	–	–	–

Air-Operated Double-Diaphragm Transfer Pumps Replacement Parts

Pump Number	D31255	243669	241906	647016	647731	647648	DB3525	DF3525	652002
Air Valve Replacement Kit	239952	241657	241657	24B768	24B768	24B768	236273	236273	24K860
Seats	D03200	D05200	D05200	24B634	24B632	24B634	D0B500	D0F500	24K932
Balls	D03050	D05070	D05070	24B639	24B639	24B639	D0B020	D0F020	24K937
Diaphragm Kit	D03005	D05007	D05007	24B624	24B624	24B624	D0B005	D0F005	24K901
Fluid Repair Kit (Ball, Seats, Diaphragm)	D03255	D05277	D05277	25A857	–	25A857	D0B525	D0F525	25A874

7 Year Warranty!

Ideal for Undercoating and Rustproofing Application in Medium-Sized Shops

Utilizing the durable Fire-Ball® 300 pump, these kits are designed for use in medium-volume undercoating and rustproofing dispense applications. A three-inch differential air motor ensures smooth pumping, and the double-acting pump design provides reliable material flow and accurate dispense.

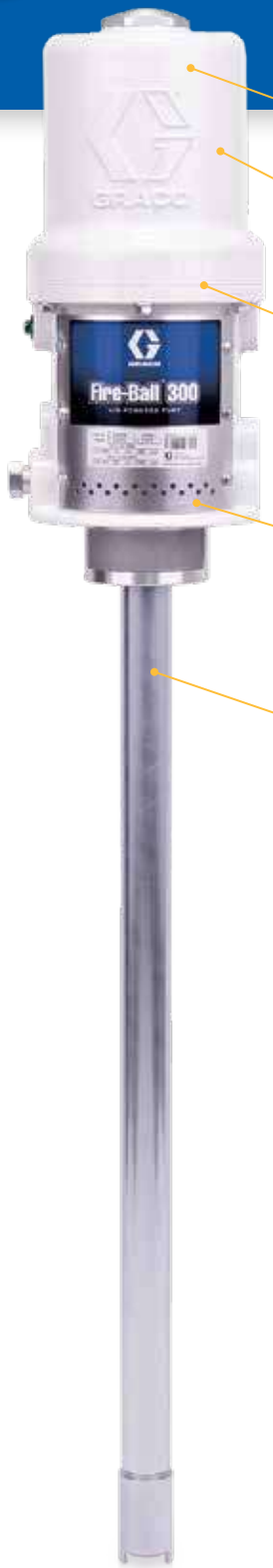

Durable

Thick cast aluminum air motor housing offers unmatched durability.

Superior Material Handling

Double-acting pump ensures smooth fluid flow.

Extended Seal Life

In-line pump design aligns the air motor piston and fluid piston rods to maximize seal life.

Wetted-Parts Options

Available in carbon steel for petroleum-based or SST for water-based materials.

Corrosion-Resistant

Corrosion-resistant design utilizes liquid nitriding, nickel plating, stainless steel, aluminum and chrome on key components for longer life.

Typical Applications

- Undercoating, rustproofing and sound-deadening materials
- Automotive and heavy-duty vehicle dealerships
- Fast lube centers and service shops
- Fleet service facilities

Typical Fluids Handled

- Undercoating and rustproofing (Verify chemical compatibility for pump's wetted components with undercoating material supplier or contact Graco directly at 1-800-533-9655)

Pump Performance

Fire-Ball 300 15:1 Pumps

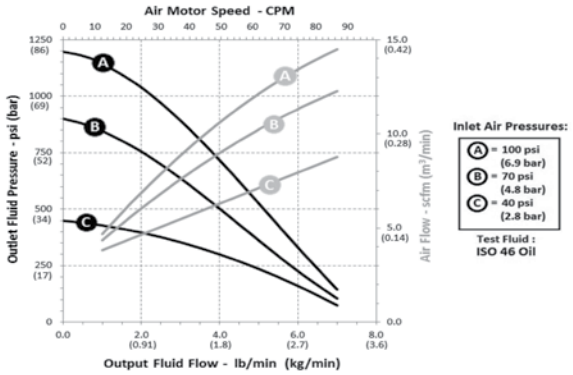

Technical Specifications

Fluid Pressure Ratio	15:1
Air Motor Effective Diameter	3 in (76.2 mm)
Annual Usage	Up to 10,000 lb (4,535 kg)
Maximum Fluid Working Pressure	2,700 psi (186 bar / 18.6 MPa)
Approximate Free-Flow Rate @ 100 psi	7.5 lb/min (3.4 kg/min)
Output per Cycle	1.29 oz (36.6 g)
Continuous-Duty Flow Rate	0.7 lb/min (0.32 kg/min)
Approximate Air Use and Flow @ 100 psi (80 cpm)	14 @ 6.5 lb/min (0.40 @ 2.9 kg/min)
Air Inlet	3/8 in NPT(F)
Fluid Outlet	1/4 in NPT(F)
Air Operation Range	40 psi to 180 psi (2.8 bar to 12.5 bar)
Max Recommended Pump Speed	66 cpm
Cycles per Pound	12.4 cpp
Cycles per Kg	27 cpk
Wetted Parts	CS, AL, leather, PTFE, rubber
Sound Pressure Level	77.8 dB(A)
Sound Power Level	85.6 dB(A)
Approximate Weight	22 lb (10 kg)
Instruction Manual	306531

Ordering Information

Undercoating Packages

Package Number	222077	226342	226269
Type of Package	Stationary	Portable Dolly-Mounted	Stationary
Ratio	15:1	15:1	15:1
Container Size	35 lb (16 kg)	120 lb (54 kg)	400 lb (180 kg)
Pump Part Number	206405	206699	206700
Dispense Kit*	222079	222079	222082
Tip	286517	286517	286517
Hose Length	15 ft (4.6 m)	15 ft (4.6 m)	25 ft (7.6 m)
Drum Cover	222058	204574	200326
Portable Base	–	204144	–
Instruction Manual	307879	307879	307879

*Dispense kit includes Air Regulator (110234), Air Gauge (100960), Spray Gun (234237)

Ordering Information

Spray Masking Package

Package Number	224826
Type of Package	Bung Mounted Stationary
Ratio	15:1
Container Size	400 lb (180 kg)
Pump Part Number	224825 (SST pump)
Flexible Downtube	224022*
Dispense Kit**	224023
Tip	286211/286621
Hose Length	25 ft (7.6 m)
Instruction Manual	308069

*224022 is long enough for 400 lb (180 kg) container, but can be trimmed to accommodate smaller containers. **Dispense kit includes Flex Plus™ spray gun (235457).

Ordering Information

Application Gun

	Part Number	Description
	234237	Four-finger silver gun with tip guard 243161 and tip 286517. 4,500 psi (310 bar) x 3/8 NPT(f) inlet. Must order 155570 adapter and 239663 straight swivel to accommodate gun to 1/4 in (mbe) hose.

Bung Adapter

	Part Number	Description
	239966	Bung adapter compatible with Fire-Ball 300, 15:1 pump

Filter

	Part Number	Description
	214570	60-mesh aluminum filter, 3/8 NPT(F) inlet, 1/4 NPT(F) outlet. Maximum working pressure 3,000 psi (210 bar).

Nozzle Extension

	Part Number	Description
	206496	Nozzle extension delivers 360° coating fan into blind areas. Length 30-3/4 in (99 cm) x 7/8-14(f) end. Tip 206502, size .043.

Replacement Screen Elements (SST)

		Part Number		
		30 Mesh	60 Mesh	100 Mesh
	3-Pack	224458	224459	224469
	25-Pack	238436	238438	238440

Swivel

	Part Number	Description
	202577	Z-swivel allows non-binding movement for hard-to-reach locations. Order 155570 adapter separately to accommodate 234237 gun.

Bulldog® 43:1 Oil Pump

Oil | Gear Lube | Hydraulic Oil | ATF

1 Year Warranty

Reliable Operation in the Harshest Environments

With its efficient, large-ported air valve, the Bulldog 43:1 air-powered pump is the highest-performing in its class. Downtime is minimized by an air motor design that has been developed and tested for more than 10 million cycles of operation.

Added Safety

Grounded lug prevents static buildup.

Easy Installation

Compact, low-profile design makes installation easier.

Corrosion-Resistant

Lightweight aluminum construction.

Built-In Reliability

Tested to 10 million cycles without failure.

Typical Applications

- Supplies hydraulic oil to accumulators in oil rig blow-out prevention systems.

Typical Fluids Handled

- Hydraulic oil

Pump Performance

Bulldog 43:1 Pumps

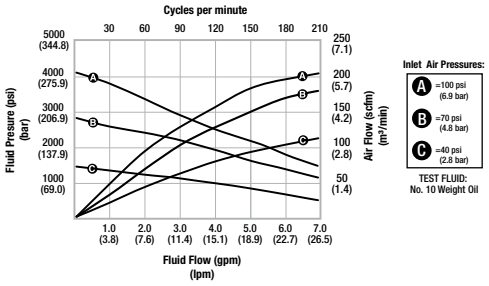

Specialty Pumps

Bulldog 43:1 Oil Pump

Technical Specifications

Fluid Pressure Ratio	43:1
Maximum Fluid Working Pressure	4,300 psi (301 bar / 30.1 MPa)
Maximum Air Input Pressure	100 psi (7 bar)
Air Inlet	3/4 in NPSM(F)
Fluid Inlet	1 in NPT(F)
Fluid Outlet	3/4 in NPT(F)
Wetted Parts	Carbon steel, stainless steel, chrome plating, zinc plating, nickel plating, brass, Buna-N
Instruction Manual	309966

Ordering Information

Bulldog 43:1 Pumps

Part Number	Description
218334	43:1 Bulldog hydraulic supply pump

Accessories

Air Pressure Regulators

Part Number	Description
206197	1/2 in NPT inlet and outlet
207755	3/4 in NPT inlet and outlet

Air Line Filters

Part Number	Description
106149	1/2 in NPT inlet and outlet
106150	3/4 in NPT inlet and outlet

Air Line Lubricators

Part Number	Description
214848	1/2 in NPT inlet and outlet
214849	3/4 in NPT inlet and outlet

Grounding Clamp and Wire

Part Number	Description
103538	Grounding clamp
222011	Ground wire

Bleed-Type Master Air Valve

Part Number	Description
107142	1/2 in NPT inlet and outlet

Repair Kits

Part Number	Description
24U227	Pump lower repair kit
24U228	Air motor repair kit
24W515	Pump and air motor repair kit

ATF | Water | Anti-Freeze | Washer Fluid | Oil/ Used Oil

Used for Low-Volume Dispense of a Variety of Fluids

This air-operated piston pump is ideal for pumping various fluids and provides a continuous-duty flow rate of up to 5 gpm.

High-Quality Air Motor

Differential air motor ensures smooth pumping.

Lightweight Design

Allows for easy transport and drum insertion.

Easily Controlled Flow Rate

Simple regulation of air supply controls flow rate.

Submersible Suction Tube

Stubby and drum length suction tubes eliminate the need for suction pipe or tube.

Corrosion Resistance

Available stainless steel models offer protection in harsh environments.

Typical Applications

- Low-pressure, high-volume transfer of low viscosity fluids
- Automotive dealerships
- Heavy-duty dealerships
- Fast lube centers
- Fleet service facilities
- Service shops
- In-plant
- Lube trucks
- Mining

Typical Fluids Handled

- Water
- Anti-freeze
- Windshield wash fluid
- Used oil
- Used anti-freeze

NOTE: Use Fast-Ball® 1:1 for petroleum-based products.

Pump Performance

Fast-Flo 1:1 Pumps

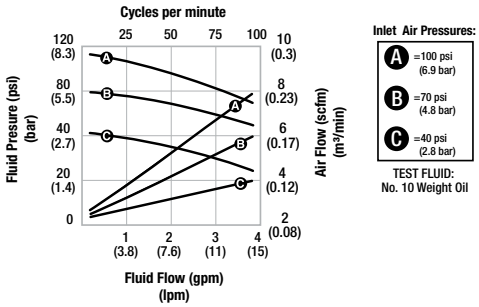

Technical Specifications

Fluid Pressure Ratio	1:1
Air Motor Effective Diameter	1.4 in (35.6 mm)
Maximum Fluid Working Pressure	180 psi (12 bar/1.2 Mpa)
Approximate Free-Flow Rate @ 100 psi (80 cpm)	5 gal/min (19 liters/min)
Output per Cycle	151 cc
Approximate Air Use and Flow @ 100 psi (80 cpm)	7 csfm @ 3.1 gpm (0.2 m^3/mm @ 11.71 lpm)
Air inlet	1/4 in NPT(F)
Fluid Inlet	1-1/2 in NPT(F)
Fluid Outlet	3/4 in NPT(F)
Air Operations Range	40 psi to 180 psi (2.8 bar to 12 bar)
Maximum Pump Speed	100 cpm
Cycles per Gallon	25 cpg
Cycles per Liter	6.6 cpl
Wetted Parts	See ordering info
Sound Pressure Level	72 dB(A)
Sound Power Level	82 dB(A)
Instruction Manual	307427

Ordering Information

Fast-Flo 1:1 Pumps

Includes motor and pump lower assembly.

Fluid	Length	Tube Material	Seal Material	Approvals	Part Number
Anti-Freeze, Windshield Washer Solvent, ATF, Oil	Drum	Stainless Steel	Polyethylene	ETL, CE, EX	226942
	Universal	Stainless Steel	Polyethylene	ETL, CE, EX	226945
Oil	Drum	Carbon Steel	Buna-N	CE	226947
			Buna-N	CE	226951*
			Leather	CE, EX	237133
			PTFE	CE, EX	237134
			Leather	ETL, CE, EX	226940
			Polyethylene	ETL, CE, EX	226941
		Stainless Steel	Buna-N	CE	226953
			PTFE	CE, EX	237129
	Universal	Carbon Steel	Buna-N	CE	226948
			Leather	CE, EX	237130
			PTFE	CE, EX	237131
			Leather	ETL, CE, EX	226943
			Polyethylene	ETL, CE, EX	226944
		Stainless Steel	Buna-N	CE	226952
			PTFE	CE, EX	237132

*Adjustable downtube length between 18 in (457 mm) and 46.4 in (1,180 mm)

Fast-Flo 1:1 Pump Accessories

Ordering Information

Hose and Fitting Kits

	Part Number	Description	Includes	
			Air Hose / Swivel Elbow	Fluid Hose / Swivel Elbow
	222118	18 in (0.5 m) for connecting wall-mounted Fast-Flo 1:1 pumps to piping	109123 / 155541	109108 / 160327
	222119	6 ft (1.8 m) for use with drum-mounted Fast-Flo 1:1 pumps	109125 / 155541	109105 / 160327

Bung Adapters

	Part Number	Description
	214583	Allows direct mounting of full-length Fast-Flo 1:1 pumps into standard 2 in NPT drum bung (included).
	217359	Sealed bung adapter for Fast-Flo pumps; can be used with suction kit 236054.

Installation Kits

	Part Number	Description
	218316	Includes regulator (104815), gauge (104655) and fittings (169969/114558) as necessary for normal installation.
	210881	Wall mounting bracket for Fast-Flow 1:1 Pumps

Suction Kit

	Part Number	Description	Includes		
			Bung Adapter	Bushing Pipe	6 ft Hose
	236054	6 ft (1.8 m) suction kit for 55 gal (200 l) drums. For use with Fast-Ball, Mini Fire-Ball and Fire-Ball universal pumps.	188845	101496	109105

Ordering Information

Drum Covers

	Part Number	Description
	204574	Drum cover for 10 gal (40 l) and 16 gal (60 l) sized containers. Drum cover mounts on top of an open drum with mounting house for a 1:1 pump. Includes thumb screws and a rubber gasket.
	200326	Drum cover for a 55 gal (200 l) container. Drum cover mounts on top of an open drum, with mounting for a 1:1 pump.

Air Line Filter

	Part Number	Description
	106149	1/2 in NPT inlet and outlet

Air Line Lubricator

	Part Number	Description
	214848	1/2 in NPT inlet and outlet

Oil | Gear Lube | ATF | Anti-Freeze | Oil/ Waste Oil

Electric Gear Pumps for High-Volume Transfer

1 Year Warranty

At Graco, we provide durable pumping solutions for all your oil and fluid transfer applications. Our line of APEX pumps is available in AC and DC configurations to meet your fluid transfer needs.

APEX Transfer Pumps

- Available with 12 VDC, 115 VAC and 230 VAC electric motors
- TENV electric motor to handle the dirtiest environments – models 260105, 260106, 260108 and 260109
- Self-priming, positive displacement design
- Pumps petroleum- and synthetic-based lubricants up to 8 gpm (30 lpm)
- Built-in bypass valve
- Transfer used oil with inlet suction screen
- System includes suction tube, fluid hose, dispense valve and bung adapter for models 260100, 260101, 260102 and 260104

APEX On-Demand Pumps

- Available in 12 VDC and 115 VAC
- On-demand pressure-sensing system starts and stops the pump
- TENV electric motor to handle the dirtiest environments
- Extremely quiet pump operation
- Output flow is continuous and non-pulsating
- Low operating and installation costs
- Inlet and outlet check valves with thermal relief valves included
- All units include bung adapter

Typical Applications

- Filling bulk tanks from drums
- Lubricant transfer from remote locations
- Construction equipment
- Agricultural equipment
- Filling in-plant machinery
- Evacuating used oil receivers
- Filling shop oil furnaces with new or used oil
- Automotive and truck service garages
- Fleet marine and personal boat service
- Aircraft maintenance

Typical Fluids Handled

- Synthetic oil
- Petroleum oil*
- Used oil*
- Anti-freeze
- Hydraulic fluids
- Cutting oils
- Liquid soap
- Non-flammable oil-based solvents
- Oil-based herbicide carriers

**Not for food grade use.*

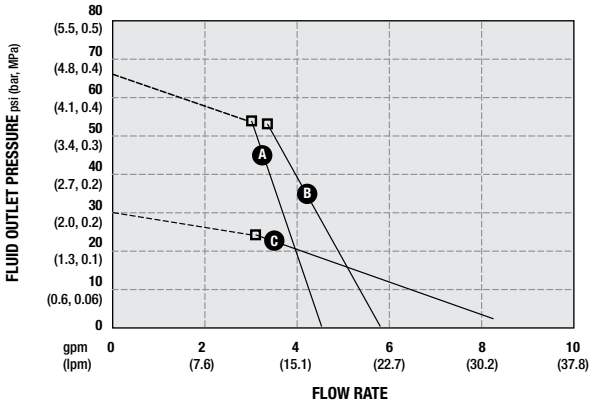

PART NUMBERS	LEGEND
Ⓐ = 260101, 260104	Relief valve opens □
Ⓑ = 260100	
Ⓒ = 260102	

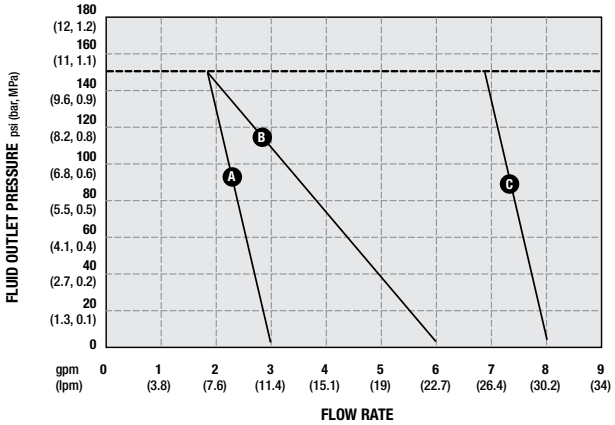

PART NUMBERS	LEGEND
Ⓐ = 260105, 260106	Relief valve setting at 150 psi (10.3 bar, 1.0 MPa) -----
Ⓑ = 260108	
Ⓒ = 260109	

Ordering Information

APEX Pumps

Part Number	260100	260101	260102	260104	260105	260106	260108	260109
Motor	12 VDC	115 VAC	115 VAC	230 VAC	115 VAC	115 VAC	115 VAC	115 VAC
Hertz	–	60 Hz	60 Hz	50/60 Hz	60 Hz	60 Hz	60 Hz	60 Hz
Horsepower	3/4	1	3/4	1/2	3/4	3/4	3/4	1
Maximum Current (Amps)	35	9.2	9.2	4	7.5	7.5	9	11
Maximum Flow Rate gpm (lpm)	5.8 (22)	4.25 (16)	8.0 (30)	4.25 (16)	3.0 (11)	3.0 (11)	4.2 (16)	7.9 (30)
Maximum Pressure psi (bar)	65 (4.5)	65 (4.5)	65 (4.5)	65 (4.5)	150 (10)			
Automatic Relief Setting psi (bar)	65 (4.5)	65 (4.5)	30 (2.1)	65 (4.5)	–			
Inlet	1 in NPT							
Outlet	3/4 in NPT							
Wetted Parts	Carbon steel with zinc plating, stainless steel, galvanized steel, aluminum, nitrile, rubber, PVC, PVC cement				Carbon steel with zinc plating, stainless steel, galvanized steel, aluminum, nitrile, rubber			
Weight lb (kg)	34 (15)	25 (11)	25 (11)	25 (11)	25 (11)	25 (11)	25 (11)	30 (14)
Manual	311305				311306			

APEX and APEX On-Demand

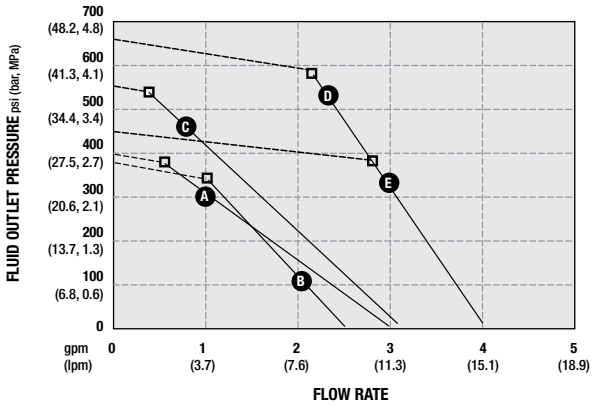

PART NUMBERS

Ⓐ = 260112 Ⓓ = 260114
Ⓑ = 260110 Ⓔ = 260113
Ⓒ = 260111

LEGEND:
Pressure switch opens □

Ordering Information

APEX On-Demand Pumps

Part Number	260110	260111	260113	260114	260112
Voltage	115 VAC	115 VAC	115 VAC	115 VAC	12 VDC
Hertz	60 Hz	60 Hz	60 Hz	60 Hz	–
Horsepower	3/4	1	1-1/2	2	3/4
Bung Adapter	260061	260061	260061	260061	260061
Maximum Current (Amps)	10.6	13.6	18.0	21.0	62.0
Maximum Flow Rate gpm (lpm)	2.3 (9)	3 (11)	4 (15)	4 (15)	3 (11)
Maximum Pressure psi (bar)	370 (25)	550 (38)	470 (32)	650 (45)	400 (28)
Inlet	3/4 in NPT	3/4 in NPT	3/4 in NPT	3/4 in NPT	3/4 in NPT
Outlet	1/2 in NPT	1/2 in NPT	1/2 in NPT	1/2 in NPT	1/2 in NPT
Wetted Parts	Carbon steel with zinc plating, stainless steel, galvanized steel, aluminum, nitrile, rubber, PVC, PVC cement				
Weight lb (kg)	27 (12)	32 (15)	41 (19)	52 (24)	27 (12)
Manual	311307				

Ordering Information

Accessories

	Part Number	Description
	260145	Wall mounting bracket, fits all models
	260238	"Y" strainer with 3/4 in NPT female in-line strainer for used oil transfer
	260306	Inlet suction screen assembly, required for used oil applications, 20 mesh screen
	260124	55 in (1.3 m) PVC suction tube with inlet check valve
	260125	Dispense valve kit
	260300	Suction tube kit, 3/4 in PVC

Fuel Chemicals

1 Year Warranty

Graco piston hand pumps are designed for long life and smooth operation

Features and Benefits

- Lightweight die cast aluminum construction
- Corrosion-resistant design
- High-quality piston seals are designed for long life and smooth operation
- Integrated nozzle holster helps prevent fluid contamination
- Adjustable bung adapter allows pump to be rotated
- One quart per stroke gives fast, efficient fluid transfer
- Locking mechanism prevents unauthorized dispensing

Technical Specifications

	260406	260407
Inlet	1 in NPT(F)	1 in NPT(F)
Outlet	3/4 in NPT(F)	3/4 in NPT(F)
Hose	3/4 in x 8 ft, EPDM	3/4 in x 8 ft, petroleum (buna)
Standpipe	34 in / 2 piece	34 in / 2 piece
Shaft and Piston Liner	SST	SST
Seals	Viton	Buna-N
Weight	12 lb (5 kg)	12 lb (5 kg)
Instruction Manual	311308	311308

Typical Applications

- Construction equipment
- Agricultural equipment

Typical Fluids Handled

- Petroleum products and other fluids compatible with aluminum and buna-N seals.
- Herbicides and other chemicals or fluids compatible with fluoroelastomer seals, aluminum, and EPDM.

Ordering Information

Part Number	Description
260406	Chemical Piston Hand Pump
260407	Petroleum Piston Hand Pump

HOSE AND CORD REELS

Page

Hose Reel Selection Guide 212
LD™ Series Enclosed Hose Reels 214-216
SD™ Series Hose Reels 217-223
SD™ Series Cord and Light Reels. 224-227
XD™ Series 10/20 Hose Reels 228-233
XD™ Series 30 Hose Reels. 234-238
XD™ Series 40/50 Hose Reels 239-244
XD™ Series 60/70/80 Powered Hose Reels 246-257

GRACO®

Graco Hose and Cord Reel Selection Guide

	Typical Application	Typical Fluid	Hose/Cord Length Options	Enclosed	Reference Pages
LD™ Series	• Small maintenance shops • Tire maintenance shops • Small fast lubes • Independent repair facilities • Industrial manufacturing facilities	• Petroleum- and synthetic-based oils • Air • Water • Grease • Anti-freeze • Windshield washer fluid	• 35 ft (11 m) • 45 ft (14 m) • 50 ft (15 m)	Yes	214-216
SD™ 10 / 20 Series	• Car dealerships • Light-/medium-duty truck dealers • Fleet maintenance • Public works garages • Construction vehicle maintenance • Light-utility service trucks	• Petroleum- and synthetic-based oils • Air • Water • Grease • Anti-freeze • Windshield washer fluid	• 35 ft (11 m) • 50 ft (15 m) • 65 ft (20 m)	Optional	217-224
SD™ Series Cord Reels	• Automotive dealerships • Fast lube centers • Service shops • Heavy-duty dealerships • Fleet services facilities • In-plant • Lube trucks • Mining	–	• 35 ft (11 m) • 50 ft (15 m) • 95 ft (29 m)	Optional	224-227
XD™ 10 / 20 Series	• Heavy-duty truck dealers • Fleet maintenance • Mining maintenance • Public works garage • Construction vehicle maintenance • Heavy-duty mobile service trucks • Mining • Lube trucks	• Petroleum- and synthetic-based oils • Air • Water • Grease • Anti-freeze • Windshield washer fluid	• 35 ft (11 m) • 50 ft (15 m) • 65 ft (20 m)	Optional	228-233
XD™ 30 Series	• Heavy-duty truck dealers • Fleet maintenance • Mining maintenance • Public works garage • Construction vehicle maintenance • Heavy-duty mobile service trucks • Mining • Lube trucks	• Petroleum- and synthetic-based oils • Diesel fuel • Air • Water • Grease • Anti-freeze • Windshield washer fluid • Pressure wash • Waste oil evacuation • Diesel exhaust fluid (DEF)	• 35 ft (11 m) • 50 ft (15 m) • 65 ft (20 m) • 75 ft (23 m)	No	234-238
XD™ 40 / 50 Series	• Heavy-duty truck dealers • Fleet maintenance • Mining maintenance • Public works garages • Construction vehicle maintenance • Heavy-duty mobile service trucks • Agriculture • Lube trucks	• Petroleum- and synthetic-based oils • Diesel fuel • Air • Water • Anti-freeze • Waste oil evacuation	• 35 ft (11 m) • 50 ft (15 m) • 75 ft (23 m) • 100 ft (30 m)	No	239-244
XD™ 60 / 70 / 80 Series	• Heavy-duty truck dealers • Fleet maintenance • Mining maintenance • Public works garages • Construction vehicle maintenance • Heavy-duty mobile service trucks • Agriculture • Lube trucks	• Petroleum- and synthetic-based oils • Diesel fuel • Air • Water • Grease • Waste oil evacuation	• 50 ft (15 m) • 75 ft (23 m) • 100 ft (30 m) • 150 ft (46 m)	No	246-257

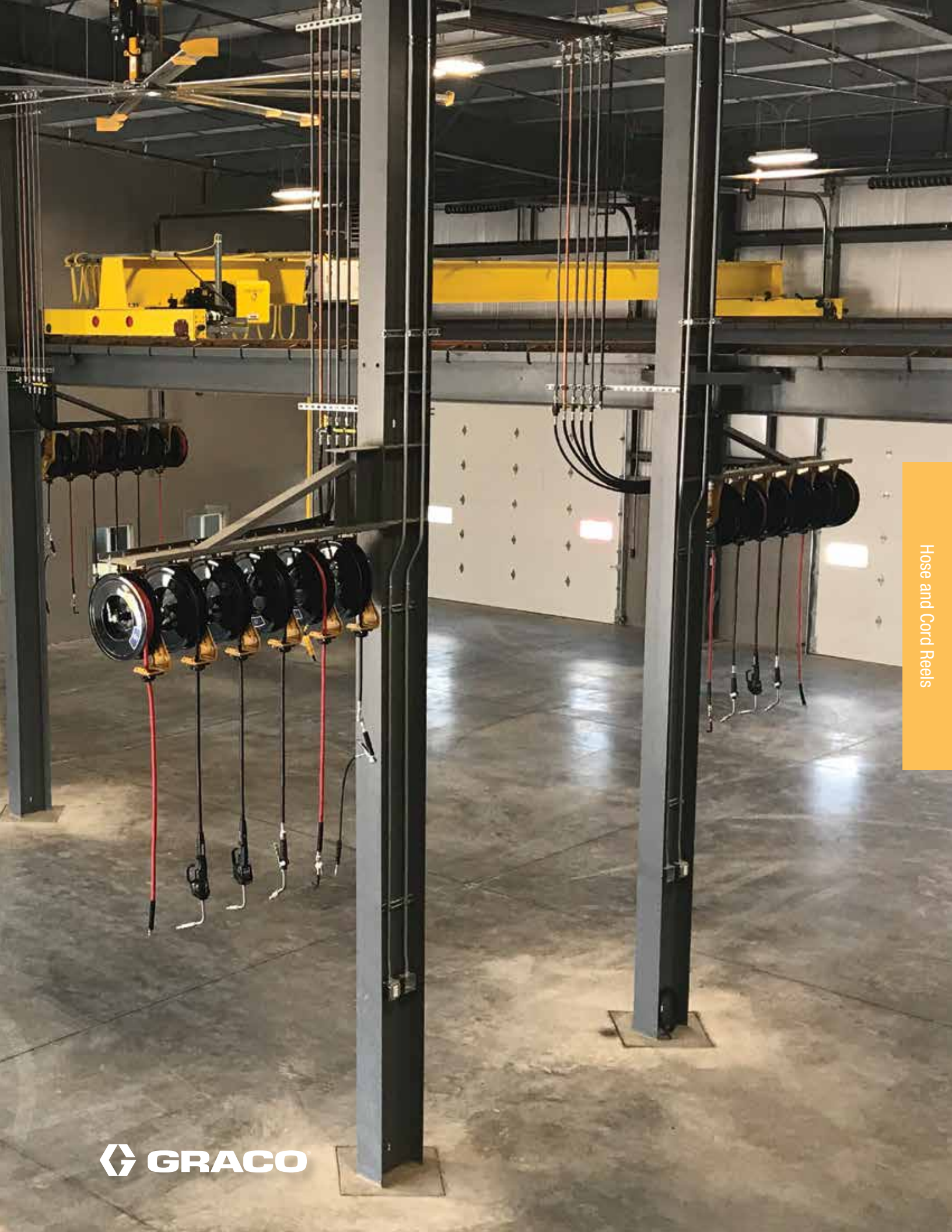

Hose and Cord Reels

GRACO

LD Series Enclosed Hose Reels

Oil | Gear Lube | ATF | Grease | Air | Water | Anti-Freeze | Washer Fluid

5 Year Warranty!

Economical Enclosed Hose Reels Get You Up and Running Fast

Reduce clutter and increase workplace safety with a Graco one-piece enclosed hose reel. Designed for light-duty applications in dealerships, service garages, collision repair and industrial manufacturing facilities.

Large Fluid Porting

Maximizes fluid flow with minimal pressure drop

Simple Spring Tension Adjustment

Ability to increase or decrease spring tension while reel is pressurized

Multiple Mounting Options

Wall, ceiling bench, or tank configurations (wall mount pictured)

Full Enclosure

Tough, dent-proof, corrosion-resistant enclosure

Typical Applications

- Small maintenance shops
- Tire maintenance shops
- Small fast lubes
- Independent repair facilities
- Industrial manufacturing facilities

Typical Fluids Handled

- Petroleum- and synthetic-based oils (motor, gear and ATF)
- Air
- Water
- Grease
- Anti-freeze
- Windshield washer fluid

Dimensions

A	7.1 in (180 mm)
B	23.0 in (585 mm)
C	18.5 in (470 mm)
D	25.6 in (650 mm)

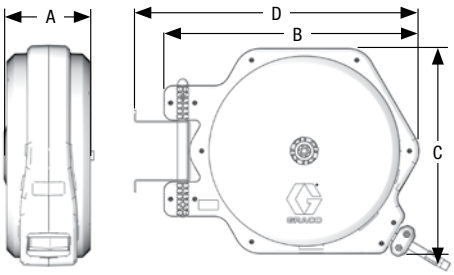

Technical Specifications

Operating Temperature Range	
Air-Only Reels	14°F to 140°F (-10°C to 60°C)
Water Applications	32°F to 140°F (0°C to 60°C)
All-Other Applications	0°F to 140°F (-18°C to 60°C)
Wetted Parts	
Air Only Reels	Aluminum, Buna-N rubber, PVC
Air/Water/Anti-Freeze/Windshield Washer Fluid Reels	Aluminum, Buna-N rubber
Oil Reels	Carbon steel, Buna-N rubber, PTFE
Grease Reels	Carbon steel, Buna-N rubber
Sound Pressure Level	69.3 dB(A)
Sound Power Level	75.3 dB(A)
Instruction Manual	313938

Ordering Information

LD Series Reel Packages

Includes hose with ball stop kit and hose guide, mounting bracket and hose inlet kit.

Type of Mount	Fluid	Hose		Connection Size		Maximum Pressure psi (bar)	Package Part Number	Package Includes		
		ID in (mm)	Length ft (m)	Inlet in (mm)	Outlet in (mm)			Reel Assembly	Mount Kit	Inlet Kit
Ceiling/Wall Swivel Mount	Air/Water/ Anti-Freeze/ Windshield Washer Fluid	3/8 (10)	35 (11)	1/2 (13)	3/8 (10)	250 (17.2)	24F737	24H657	24G866	24C444
		3/8 (10)	50 (15)	1/2 (13)	3/8 (10)	250 (17.2)	24F738	24H658		
		1/2 (13)	35 (11)	1/2 (13)	1/2 (13)	250 (17.2)	24F739	24H659		
		1/2 (13)	50 (15)	1/2 (13)	1/2 (13)	250 (17.2)	24F740	24H660		
	Oil	3/8 (10)	35 (11)	1/2 (13)	3/8 (10)	1,800 (124)	24F741	24H661		24C537
		1/2 (13)	35 (11)	1/2 (13)	1/2 (13)	1,800 (124)	24F742	24H662		24C538
	Grease	1/4 (6)	35 (11)	3/8 (10)	1/4 (6)	5,000 (345)	24F743	24H663		24C539
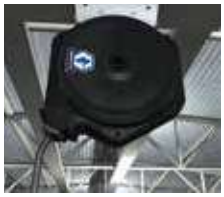 *Ceiling/Wall Stationary Mount*	Air/Water/ Anti-Freeze/ Windshield Washer Fluid	3/8 (10)	35 (11)	1/2 (13)	3/8 (10)	250 (17.2)	24F755	24H657	24G865	24C444
		3/8 (10)	50 (15)	1/2 (13)	3/8 (10)	250 (17.2)	24F756	24H658		
		1/2 (13)	35 (11)	1/2 (13)	1/2 (13)	250 (17.2)	24F757	24H659		
		1/2 (13)	50 (15)	1/2 (13)	1/2 (13)	250 (17.2)	24F758	24H660		
	Oil	3/8 (10)	35 (11)	1/2 (13)	3/8 (10)	1,800 (124)	24F759	24H661		24C537
		1/2 (13)	35 (11)	1/2 (13)	1/2 (13)	1,800 (124)	24F760	24H662		24C538
	Grease	1/4 (6)	35 (11)	3/8 (10)	1/4 (6)	5,000 (345)	24F761	24H663		24C539
Bench Swivel Mount	Air/Water/ Anti-Freeze/ Windshield Washer Fluid	3/8 (10)	35 (11)	1/2 (13)	3/8 (10)	250 (17.2)	24F773	24H657	24C772	24C444
		3/8 (10)	50 (15)	1/2 (13)	3/8 (10)	250 (17.2)	24F774	24H658		
		1/2 (13)	35 (11)	1/2 (13)	1/2 (13)	250 (17.2)	24F775	24H659		
		1/2 (13)	50 (15)	1/2 (13)	1/2 (13)	250 (17.2)	24F776	24H660		
	Oil	3/8 (10)	35 (11)	1/2 (13)	3/8 (10)	1,800 (124)	24F777	24H661		24C537
		1/2 (13)	35 (11)	1/2 (13)	1/2 (13)	1,800 (124)	24F778	24H662		24C538
	Grease	1/4 (6)	35 (11)	3/8 (10)	1/4 (6)	5,000 (345)	24F779	24H663		24C539

Oil | Gear Lube | ATF | Grease | Air | Water | Anti-Freeze | Washer Fluid

Ordering Information

LD Series Reel

Includes hose. Mounting hardware and hose inlet kit sold separately.

Fluid	Hose		Connection Size		Maximum Pressure psi (bar)	Part Number	Hose Inlet Kit (order separately)
	ID in (mm)	Length ft (m)	Inlet in (mm)	Outlet in (mm)			
Air/Water/ Anti-Freeze/ Windshield Washer Fluid	3/8 (10)	35 (11)	1/2 (13)	3/8 (10)	250 (17.2)	24H657	24C444
	3/8 (10)	50 (15)	1/2 (13)	3/8 (10)	250 (17.2)	24H658	24C444
	1/2 (13)	35 (11)	1/2 (13)	1/2 (13)	250 (17.2)	24H659	24C444
	1/2 (13)	50 (15)	1/2 (13)	1/2 (13)	250 (17.2)	24H660	24C444
Oil	3/8 (10)	35 (11)	1/2 (13)	3/8 (10)	1,800 (124)	24H661	24C537
	1/2 (13)	35 (11)	1/2 (13)	1/2 (13)	1,800 (124)	24H662	24C538
Grease	1/4 (6)	35 (11)	3/8 (10)	1/4 (6)	5,000 (345)	24H663	24C539

Hose Inlet Kits

A hose inlet kit is included in LD reel packages but must be ordered separately with standalone LD reel assemblies.

Fluid Type	Maximum Working Pressure psi (bar)	Size In (mm)	Inlet Configuration	Outlet Configuration	Part Number	Used with Hose Reel Model
Air Only	250 (17.2)	1/4 (6)	1/4 NPT(M)	1/4 NPT(M)	24C443	24H655 / 24H656
Air/Water		3/8 (10)	1/2 NPT(M)	3/8 NPT(M)	24C444	24H657 / 24H658
		1/2 (13)	1/2 NPT(M)	1/2 NPT(M)		24H659 / 24H660
Oil	1,800 (124)	3/8 (10)	1/2 NPT(M)	1/2 NPT(M)	24C537	24H661
		1/2 (13)	1/2 NPT(M)	1/2 NPT(M)	24C538	24H662
Grease	5,000 (345)	1/4 (6)	1/4 NPT(M)	1/4 NPT(M)	24C539	24H663

7 Year Warranty!

Engineered for Everyday Use

The SD line of hose reels feature Graco durability, performance and value built into every reel. With its durable metal spool and rigid pedestal frame, the compact SD Series is ideal for indoor and moderate outdoor exposure.

Full-Flow Swivel

Maximize material flow with minimal pressure drop for faster fills to get more vehicles through your shop.

Adjustable Arm

Easily change to one of six arm positions to fit your application.

Large Hose Capacity with Small Profile

Compact pedestal and spool fits into tight spaces and can accommodate 35-65 foot (10.7-19.8 meters) hose (NPT air/water) capacity for a wide variety of applications.

Durable Finish

Baked-on enamel finish (five colors available) protects reel from corrosion.

Reel arm shown in tank/bench mount position.

Typical Applications

- Car dealerships
- Light-/medium-duty truck dealers
- Fleet maintenance
- Public works garages
- Construction vehicle maintenance
- Light-utility service trucks

Typical Fluids Handled

- Petroleum- and synthetic-based oils (motor, gear and ATF)
- Air
- Water
- Grease
- Anti-freeze
- Windshield washer fluid

Dimensions

	SD 10	SD 20
A	7.0 in (177 mm)	7.0 in (177 mm)
B	16.2 in (412 mm)	18.1 in (460 mm)
C	21.0 in (533 mm)	23.4 in (594 mm)
D	17.1 in (435 mm)	19.2 in (488 mm)
E	19.5 in (495 mm)	21.8 in (554 mm)
F	22.5 in (571 mm)	25.2 in (640 mm)

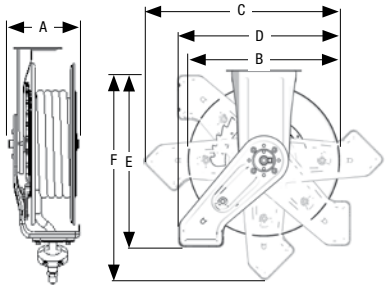

Technical Specifications

Operating Temperature Range	
Air/Water/Anti-Freeze/Windshield Washer Fluid Reels	-20°F to 190°F (-28°C to 87°C)
Oil Reels	-20°F to 190°F (-28°C to 87°C)
Grease Reels	-40°F to 200°F (-40°C to 93°C)
Wetted Parts	
Grease Reels	Zinc plated steel, polyurethane, steel
All Other Reels	Zinc plated steel, anodized aluminum, nitrile rubber
Weight	52 lb (23.5 kg)
Sound Pressure Level	80 dB(A)
Sound Power Level	88 dB(A)
Instruction Manual	313431

Oil | Gear Lube | ATF | Grease | Air | Water | Anti-Freeze | Washer Fluid

Typical Mounting Configurations

Ceiling Mount

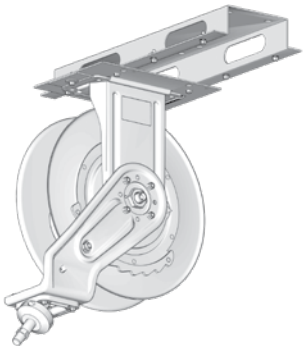

Wall Mount

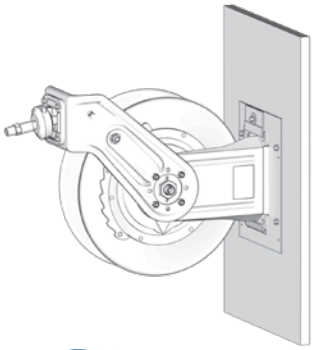

Bench/ Truck Mount

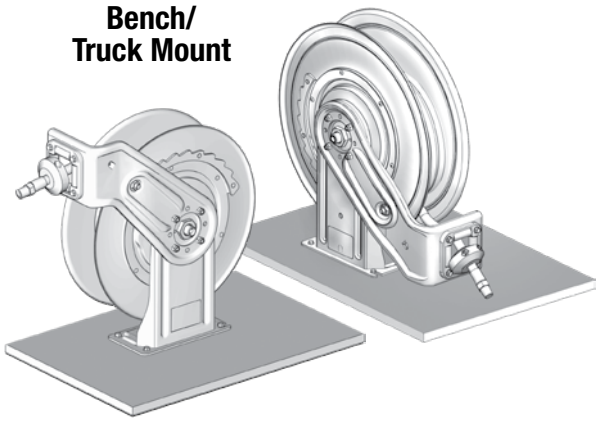

Available in 5 Colors
Consult factory for lead times.

Metallic Blue (B)
Standard Color

Yellow (F)

Black (D)

Red (C)

White (A)

Ordering Information

SD 10/20 Reel Assembly Ordering Guide

SD Series reels are available in five colors. Use the chart below to determine the correct part number to order. The last character of each part number indicates the hose reel color.

Reel Color	Identifier
White	A
Metallic Blue	B
Red	C
Black	D
Yellow	F

Order Example: Arm in overhead mount position, SD 20, oil, 1/2 in ID hose, 50 ft hose length

1 Select your reel position: HPM65#

2 Select your reel color: (from Reel Assembly Ordering Guide – opposite) Metallic Blue = "B"

Order Part Number: HPM65B

Arm in Overhead Mount Position

Assembled with hose, ball stop kit and roller guide. ***Required hose inlet kit sold separately.***

Reel Size	Fluid	Hose ID in (mm)	Hose Length ft (m)	Connection Size Inlet in (mm)	Connection Size Outlet in (mm)	Maximum Pressure psi (bar)	Assembly Part Number	Recommended Hose Inlet Kit
SD 10	Air/Water/ Anti-Freeze/ Windshield Washer Fluid	3/8 (10)	35 (11)	1/2 (13)	3/8 (10)	300 (20.7)	HPL23#	218549
		3/8 (10)	50 (15)	1/2 (13)	3/8 (10)	300 (20.7)	HPL25#	
		1/2 (13)	35 (11)	1/2 (13)	1/2 (13)	300 (20.7)	HPL33#	
SD 20		3/8 (10)	65 (20)	1/2 (13)	3/8 (10)	300 (20.7)	HPL56#	
		1/2 (13)	50 (15)	1/2 (13)	1/2 (13)	300 (20.7)	HPL65#	
SD 10	Oil	1/2 (13)	35 (11)	1/2 (13)	1/2 (13)	2,000 (138)	HPM33#	
SD 20		1/2 (13)	50 (15)	1/2 (13)	1/2 (13)	2,000 (138)	HPM65#	
SD 10	Grease	1/4 (6)	50 (15)	3/8 (10)	1/4 (6)	5,000 (345)	HPH15#	218550
		3/8 (10)	35 (11)	3/8 (10)	1/4 (6)	4,800 (331)	HPH23#	
SD 20		3/8 (10)	50 (15)	3/8 (10)	1/4 (6)	4,800 (331)	HPH55#	

Arm in Tank/Bench Mount Position

Assembled with hose, ball stop kit and roller guide. ***Required hose inlet kit sold separately.***

Reel Size	Fluid	Hose ID in (mm)	Hose Length ft (m)	Connection Size Inlet in (mm)	Connection Size Outlet in (mm)	Maximum Pressure psi (bar)	Assembly Part Number	Recommended Hose Inlet Kit
SD 20	Air/Water/ Anti-Freeze/ Windshield Washer Fluid	3/8 (10)	65 (20)	1/2 (13)	3/8 (10)	300 (20.7)	HPL5J#	218549
		1/2 (13)	50 (15)	1/2 (13)	1/2 (13)	300 (20.7)	HPL6H#	
	Oil	1/2 (13)	50 (15)	1/2 (13)	1/2 (13)	2,000 (138)	HPM6H#	
	Grease	3/8 (10)	50 (15)	3/8 (10)	1/4 (6)	4,800 (331)	HPH5H#	218550

Oil | Gear Lube | ATF | Grease | Air | Water | Anti-Freeze | Washer Fluid

Ordering Information

Bare Reels

Arm in Overhead Mount Position

Required hose inlet kit sold separately. Fluid hose not included.

Reel Size	Fluid	Hose (Not Included)		Connection Size		Maximum Pressure psi (bar)	Assembly Part Number	Recommended Hose Inlet Kit
		ID in (mm)	Length ft (m)	Inlet in (mm)	Outlet in (mm)			
SD 10	Air/Water/ Anti-Freeze/ Windshield Washer Fluid	3/8 (10)	50 (15)	1/2 (13)	3/8 (10)	300 (20.7)	HPL2D#	218549
		1/2 (13)	35 (11)	1/2 (13)	3/8 (10)	300 (20.7)	HPL2D#	
SD 20		3/8 (10)	65 (20)	1/2 (13)	1/2 (13)	300 (20.7)	HPL6D#	
		1/2 (13)	50 (15)	1/2 (13)	1/2 (13)	300 (20.7)	HPL6D#	
SD 10	Oil	1/2 (13)	35 (11)	1/2 (13)	1/2 (13)	2,000 (138)	HPM3B#	
SD 20		1/2 (13)	50 (15)	1/2 (13)	1/2 (13)	2,000 (138)	HPM6D#	
SD 10	Grease	1/4 (6)	50 (15)	3/8 (10)	3/8 (10)	5,000 (345)	HPH1D#	218550
		3/8 (10)	35 (11)	3/8 (10)	3/8 (10)	5,000 (345)	HPH1D#	
SD 20		3/8 (10)	50 (15)	3/8 (10)	3/8 (10)	5,000 (345)	HPH5D#	

Ordering Information

SD 10 Oil Reel Packages

	Reel Size	Fluid	Valve Type	Enclosure	Package Number	Package Includes			
						Reel Assembly	Enclosure	Hose Inlet Kit	Meter
	SD 10	Oil	SDM5 Manual Meter with Rigid Extension	No	24E001	HPM33B	–	218549	25M404
				Yes	24D996	HPM33B	24A217	218549	25M404
			SDM5 Manual Meter with Flexible Extension	No	24E002	HPM33B	–	218549	25M406
				Yes	24D997	HPM33B	24A217	218549	25M406
			None	Yes	24D995	HPM33B	24A217	218549	–

SD 10 Air/Water Reel Packages

	Reel Size	Fluid	Valve Type	Enclosure	Package Number	Package Includes				
						Reel Assembly	Enclosure	Hose Inlet Kit	Valve	Fitting
	SD 10	Water	Water Bib Dispense Valve	No	24D999	HPL23B	–	218549	180685	150287
				Yes	24D993	HPL23B	24A217	218549	180685	150287
					24D994	HPL33B	24A217	218549	180685	159842
		Air	Tire Chuck Valve	No	24D998	HPL23B	–	218549	218545	–
				Yes	24D992	HPL23B	24A217	218549	218545	–
		Air/Water	None	Yes	24D989	HPL23B	24A217	218549	–	–
					24D990	HPL25B	24A217	218549	–	–
					24D991	HPL33B	24A217	218549	–	–

Ordering Information

Enclosure Kits for One Reel

Open mounting accommodates up to six reels. Includes all parts necessary to mount on wall or ceiling. Requires mounting channel.

Reel Size	White	Metallic Blue	Red	Black	Dark Blue	Yellow	Required End-Caps (set of 2)
SD 10	24A217	24A940	24A941	24A942	24A943	24A944	24A950
SD 20	24A218	24A945	24A946	24A947	24A948	24A949	24A951

Hose Inlet Kits

A hose inlet kit is required when ordering an SD reel.

Maximum Working Pressure psi (bar)	Size in (mm)	Length ft (m)	Part Number
2,000 (137)	1/2 (13)	2 (0.6)	218549
4,000 (276)	3/8 (10)		218550
5,000 (345)	1/4 (6)		224417

Ball Stop Kits

SD reel packages include ball stop kits. Items below are available for bare reels and as replacement parts.

Hose Inner Diameter (ID) Size	Part Number
1/4 in (6.4 mm)	222225
1/4 in to 3/8 in (6.4 mm to 9.5 mm)	218340
3/8 in to 1/2 in (9.5 mm to 12.7 mm)	218341
5/8 in (15.9 mm)	237872

Mounting Channels

Accommodates up to six reels. Includes all parts necessary to mount on wall or ceiling.

Description	1 Reel	2 Reels	3 Reels	4 Reels	5 Reels	6 Reels
Enclosed Reel Mounting Channel	203521	203522	203523	203524	203525	203526
Open Reel Mounting Channel	24A934	24A935	24A936	24A937	24A938	24A939
I-Beam Mounting Bracket*	204741 (x 2)			204741 (x 3)		

*Secures mounting channel to I-beam without drilling – 2 are required for 1-3 reels, and 3 are required for 4-6 reels.

Ordering Information

Swivel Mounting Bracket

Allows reel to swivel 120° with two lockable positions.

	Part Number	Description
	24N444	Swivel mounting bracket for installing SD 10 reels

Easy Slide-In Mount

Allows reel to slide in and out of mount for easy installation.

	Part Number	Description
	24H193	Ceiling or wall slide-in mount for SD 10 or SD 20 reels

Retrofit Adapter Kits

	Part Number	Description
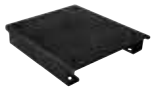	24C100	Includes all parts to mount an SD 10 hose reel to an existing 250 series mounting pattern with enclosure

Hose Identification Wraps

Vinyl hose wrap for easy identification of meter fluid.

	Part Number	Description
	17S659	Red
	17S660	Blue
	17S661	Green
	17S662	Yellow
	17S663	White

SD Series Cord and Light Reels

Quality Cord and Light Reels

Organize your work space for a safer, more productive work environment. Make Graco your single source for your entire reel bank.

2 Year Warranty!

Durable Frame in Two Sizes

Choose from the heavy-duty steel construction of the SD Series 5 or 10.

Multiple Cord Lengths

Choose from 35, 50 and 95 foot (11, 15, 29 meter) options to fit your shop perfectly. Features a 5 foot lead-in cable.

Adjustable Arm

Easily change the arm position to fit more applications. Works on walls, ceilings or bench mounts.

Heavy-Duty Pedestal

High-strength steel construction with rolled edges and ribbed stress points that won't flex or twist.

Multiple Configurations Available

Comes with or without receptacles so you can configure it for your specific needs. Light reels come in your choice of fluorescent or LED with optional tool tap receptacle.

UL/CSA Approved

Hose and Cord Reels

Typical Applications

- Automotive dealerships
- Fast lube centers
- Service shops
- Heavy-duty dealerships
- Fleet services facilities
- In-plant
- Lube trucks
- Mining

Dimensions

	SD Series 5	SD Series 10
A	3.5 in (89 mm)	3.5 in (89 mm)
B	6.38 in (162 mm)	7.5 in (191 mm)
C	4.7 in (120 mm)	4.7 in (120 mm)
D	7.48 in (190 mm)	9 in (229 mm)
E	14.8 in (376 mm)	19.5 in (498 mm)
F	6.6 in (168 mm)	7 in (177 mm)
G	13.84 in (352 mm)	17.5 in (445 mm)

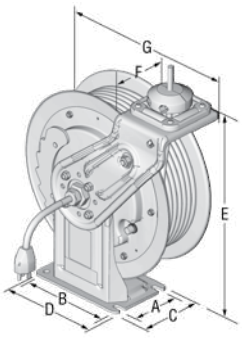

Technical Specifications

Operating Temperature Range			
	Cord Reels		-22°F to 122°F (-30°C to 50°C)
	Light Reels		-4°F to 104°F (-20°C to 40°C)
Weight without Accessories			
120V	SD 5	16 AWG, Length 35 ft	25.4 lb
		16 AWG, Length 50 ft	27.6 lb
		12 AWG, Length 35 ft	28.2 lb
		12 AWG, Length 50 ft	32.0 lb
	SD 10	16 AWG, Length 95 ft	46.3 lb
		12 AWG, Length 95 ft	51.8 lb
Instruction Manual			3A2592

Ordering Information

SD Cord and Light Reels – 120 Volt

120 volt cord and light reels have a black finish and are ETL approved to US and CSA standards.

Accessory	Reel Size	AWG	Amp	Cord Length	Insulation	Part Number
No Accessory – Cord Only	SD 5	12	20	50 ft (15 m)	SJOOW	24Y859
	SD 10	12	18	95 ft (29 m)	SJOOW	24Y880
	SD 5	16	13	50 ft (15 m)	SJTOW	24Y861
Single Industrial Receptacle	SD 5	12	20	35 ft (11 m)	SJOOW	24Y862
	SD 5	12	20	50 ft (15 m)	SJOOW	24Y863
	SD 10	12	18	95 ft (29 m)	SJOOW	24Y882
Tri-Plug GFCI Industrial Receptacle	SD 5	12	15	50 ft (15 m)	SJOOW	24Y864
	SD 10	12	15	95 ft (29 m)	SJOOW	24Y883
Fluorescent Light	SD 5	16	<1	35 ft (11 m)	SJTOW	24Y865
	SD 5	16	<1	50 ft (15 m)	SJTOW	24Y866
	SD 10	16	<1	95 ft (29 m)	SJTOW	24Y884
Fluorescent Light with Single Tool Tap Plug	SD 5	16	10	50 ft (15 m)	SJTOW	24Y868
LED Light	SD 5	16	<1	35 ft (11 m)	SJTOW	24Y869
	SD 5	16	<1	50 ft (15 m)	SJTOW	24Y870
	SD 10	16	<1	95 ft (29 m)	SJTOW	24Y886
LED Light with In-line Tool Tap	SD 5	16	12	35 ft (11 m)	SJTOW	24Y871
	SD 5	16	12	50 ft (15 m)	SJTOW	24Y872
	SD 10	16	10	95 ft (29 m)	SJTOW	24Y887

Accessory Ordering Information

Enclosure Kits

Includes an enclosure for one reel. A set of end-caps are required per single or bank of reels. Requires you to order Enclosed Reel Mounting Channel separately. For mounting SD 5 or SD 10 reels in size 20 enclosures, please see Adapter Kits on page 227.

Reel Size	White	Metallic Blue	Red	Black	Dark Blue	Yellow	Required End-Caps (set of 2)
SD 5 with size 10 enclosure	24N690	24N682	24N683	24N684	24N691	24N685	24A950
SD 10 with size 10 enclosure	24A217	24A940	24A941	24A942	24A943	24A944	24A950

Mounting Channels

Accommodates up to six reels. Includes all parts necessary to mount on wall or ceiling.

Description	Reel Size	1 Reel	2 Reels	3 Reels	4 Reels	5 Reels	6 Reels
Enclosed Reel Mounting Channel	SD 5 and SD 10	203521	203522	203523	203524	203525	203526
Open Reel Mounting Channel	SD 5	24N674	24N675	–	–	–	–
	SD 10	24A934	24A935	24A936	24A937	24A938	24A939
I-Beam Mounting Bracket*	SD 5 and SD 10	204741 (x 2)			204741 (x 3)		

*Secures mounting channel to I-beam without drilling – 2 are required for 1-3 reels, and 3 are required for 4-6 reels.

Ordering Information

Swivel Mounting Bracket

Allows reel to swivel 120˚ with two lockable positions.

Reel Size	Part Number	Description
SD 5	24N814	Swivel mounting bracket for installation
SD 10	24N444	Swivel mounting bracket for installation

Wall/Ceiling Mounting Bracket

Allows you to slide the reel in and out for easy installation.

Reel Size	Part Number	Description
SD 5	24N686	Wall/ceiling easy mount plate kit
SD 10	24H193	Wall/ceiling easy mount plate kit

Adapter Kits

Part Number	Description
24P164	Spacer bracket for mounting a size 5 reel to an existing size 10 enclosure
24P880	Spacer bracket for mounting a size 5 reel to an existing size 20 enclosure
24P881	Spacer bracket for mounting a size 10 reel to an existing size 20 enclosure
16N883	Clamping plate to mount a size 5 reel to an existing SD Series open channel

Hands-Free Magnetic Clip

Non-marring cover won't scratch vehicle finish. Snap onto light tube for hands-free operation.

Part Number	Description
16P999	Magnetic clip for light tube

XD Series Hose Reels

Oil | Gear Lube | ATF | Grease | Air | Water | Anti-Freeze | Washer Fluid

10 / 20 / 20 HN

7 Year Warranty!

Extreme Performer

The high-performance and heavy-duty XD Series Hose Reel is ideal for rugged indoor and outdoor use in truck dealerships, fleet maintenance, mining maintenance, public works garages, construction vehicle maintenance and service trucks. Features high-strength dual pedestals for reliable performance in extreme applications.

Spring Adjustment

Increase or decrease spring tension while reel is pressurized with fluid.

Full-Flow Swivel

Maximize material flow with minimal pressure drop for faster fills to get more vehicles through your shop.

Optional Adjustable Arm

Easily change to one of six arm positions to fit your application. Order with arm (HS models) or without (HN models).

Durable Finish

Baked-on enamel finish (three colors available) protects reel from corrosion.

Large Hose Capacity with Small Profile

Compact pedestal and spool fits into tight spaces and can accommodate 35-65 foot (10.7-19.8 meters) hose capacity for a wide variety of applications.

Typical Applications

- Heavy-duty truck dealers
- Fleet maintenance
- Mining maintenance
- Public works garage
- Construction vehicle maintenance
- Heavy-duty mobile service trucks
- Mining
- Lube trucks

Typical Fluids Handled

- Petroleum- and synthetic-based oils (motor, gear and ATF)
- Air
- Water
- Grease
- Anti-freeze
- Windshield washer fluid

Technical Specifications

Operating Temperature Range	
Air/Water/Anti-Freeze/ Windshield Washer Fluid	-20°F to 190°F (-28°C to 87°C)
Oil	-20°F to 190°F (-28°C to 87°C)
Grease	-40°F to 200°F (-40°C to 93°C)
Wetted Parts	
Air/Water/Anti-Freeze/ Windshield Washer Fluid	Zinc plated steel, anodized aluminum, nitrile rubber
Oil	Zinc plated steel, anodized aluminum, nitrile rubber
Grease	Zinc plated steel, polyurethane, steel
Weight (Without Hose)	
HS Models (With Adjustable Arm)	59 lb (26.5 kg)
HN Models (Without Arm)	52 lb (23.5 kg)
Sound Pressure Level	80 dB(A)
Sound Power Level	88 dB(A)
Instruction Manual	313431

Dimensions

	HS Models (with Adjustable Arm)		HN Models (without Arm)
	XD 10	XD 20	XD 20
A	7.5 in (196 mm)	7.5 in (196 mm)	7.5 in (196 mm)
B	16.2 in (412 mm)	18.1 in (460 mm)	18.1 in (460 mm)
C	21.0 in (533 mm)	23.4 in (594 mm)	23.4 in (594 mm)
D	18.0 in (457 mm)	20.0 in (508 mm)	20.0 in (508 mm)
E	18.5 in (470 mm)	21.0 in (533 mm)	21.0 in (533 mm)
F	22.5 in (571 mm)	25.2 in (640 mm)	25.2 in (640 mm)

HS Models

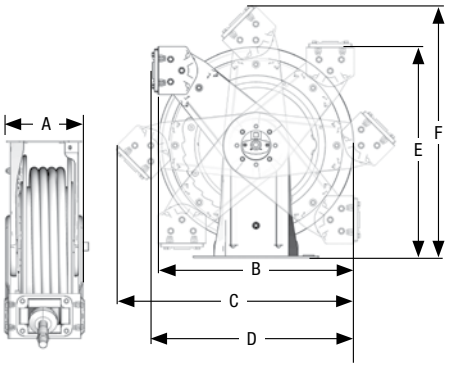

HN Models

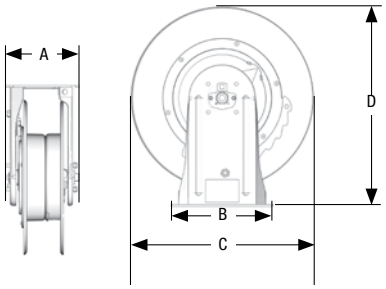

Typical Mounting Configurations

Ceiling Mount

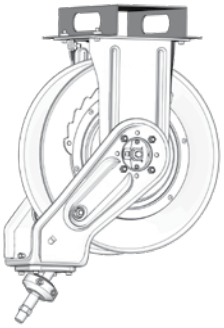

Wall Mount

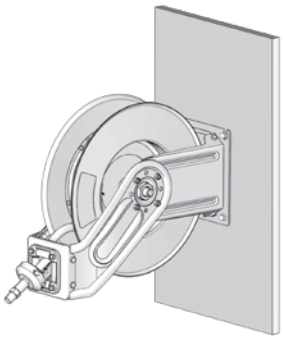

Bench/ Truck Mount

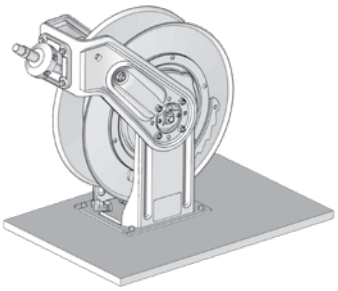

Truck Mount with Remote Mounted Roller Guide

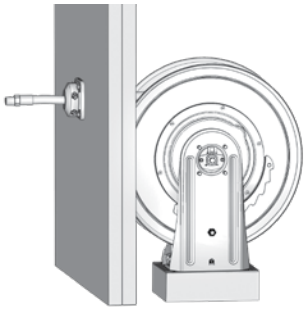

Metallic Blue (B)
Standard In-Stock Color

Available in **3 Colors**
Consult factory for lead times.

Yellow (F) **White (A)**

XD Series Hose Reels

Oil | Gear Lube | ATF | Grease | Air | Water | Anti-Freeze | Washer Fluid

10 / 20 / 20 HN

Ordering Information

XD 10/20 Reel Assembly Ordering Guide

XD Series reels are available in three colors. Use the chart below to determine the correct part number to order. The last character of each part number indicates the hose reel color.

Reel Color	Identifier
White	A
Metallic Blue	B
Yellow	F

Order Example: Arm in bench/truck mount position, XD 20, oil, 1/2 in ID hose, 50 ft hose length

1 Select your reel position: HSM65#

2 Select your reel color: (from Reel Assembly Ordering Guide – opposite) Metallic Blue = "B"

Order Part Number: HSM65B

HS Models (with Adjustable Arm)

Reel Assemblies

Assembly includes hose, ball stop kit and roller guide. ***Required hose inlet kit sold separately.***

Reel Size	Fluid	Hose (Included) ID in (mm)	Hose (Included) Length ft (m)	Connection Size Inlet	Connection Size Outlet	Maximum Pressure psi (bar)	Assembly Part Number	Recommended Hose Inlet Kit
XD 10	Air/Water/Anti-Freeze/ Windshield Washer Fluid	3/8 (10)	50 (15)	1/2 NPSM(M)	3/8 NPT(M)	300 (20.7)	HSL25#	218549
		1/2 (13)	35 (11)	1/2 NPSM(M)	1/2 NPT(M)	300 (20.7)	HSL33#	
	Oil	1/2 (13)	35 (11)	1/2 NPSM(M)	1/2 NPT(M)	2,000 (138)	HSM33#	
	Grease	1/4 (6)	50 (15)	3/8 NPSM(M)	1/4 NPT(M)	5,000 (552)	HSH15#	218550
XD 20	Air/Water/Anti-Freeze/ Windshield Washer Fluid	3/8 (10)	65 (20)	1/2 NPSM(M)	3/8 NPT(M)	300 (20.7)	HSL56#	218549
		1/2 (13)	50 (15)	1/2 NPSM(M)	1/2 NPT(M)	300 (20.7)	HSL65#	
	Oil	1/2 (13)	50 (15)	1/2 NPSM(M)	1/2 NPT(M)	2,000 (138)	HSM65#	
	Grease	3/8 (10)	50 (15)	3/8 NPSM(M)	1/4 NPT(M)	4,800 (331)	HSH55#	218550

Bare Reels

Required hose inlet kit sold separately. Fluid hose not included.

Reel Size	Fluid	Hose (Not Included) ID in (mm)	Hose (Not Included) Length ft (m)	Connection Size Inlet	Connection Size Outlet	Maximum Pressure psi (bar)	Part Number	Recommended Hose Inlet Kit
XD 10	Air/Water/Anti-Freeze/ Windshield Washer Fluid	3/8 (10)	65 (20)	1/2 NPSM(M)	3/8 NPSM(F)	300 (20.7)	HSL2D#	218549
	Oil	1/2 (13)	35 (11)	1/2 NPSM(M)	1/2 NPSM(F)	2,000 (138)	HSM3B#	
	Grease	3/8 (10)	35 (11)	3/8 NPSM(M)	3/8 NPSM(F)	8,000 (552)	HSH1D#	218550
XD 20	Air/Water/Anti-Freeze/ Windshield Washer Fluid	1/2 (13)	50 (15)	1/2 NPSM(M)	1/2 NPSM(F)	300 (20.7)	HSL6D#	218549
	Oil	1/2 (13)	50 (15)	1/2 NPSM(M)	1/2 NPSM(F)	2,000 (138)	HSM6D#	
	Grease	3/8 (10)	50 (15)	3/8 NPSM(M)	3/8 NPSM(F)	8,000 (552)	HSH5D#	218550

Ordering Information

HN Models (without Adjustable Arm)

Required hose inlet kit sold separately.

Reel Size	Fluid	Hose (Included)		Connection Size		Maximum Pressure psi (bar)	Bare Reel, Hose Assembly Part Number	Recommended Hose Inlet Kit
		ID in (mm)	Length ft (m)	Inlet	Outlet			
XD 20	Air/Water/ Anti-Freeze/ Windshield Washer Fluid	3/8 (10)	65 (20)	1/2 NPSM(M)	3/8 NPT(M)	300 (20.7)	HNL56#	218549
		1/2 (13)	50 (15)	1/2 NPSM(M)	1/2 NPT(M)	300 (20.7)	HNL65#	
	Oil	1/2 (13)	50 (15)	1/2 NPSM(M)	1/2 NPT(M)	2,000 (138)	HNM65#	
	Grease	3/8 (10)	50 (15)	3/8 NPSM(M)	1/4 NPT(M)	4,800 (331)	HNH55#	218550

HN Model Specialty Packages (without Adjustable Arm)

Includes hose guide kit. ***Required hose inlet kit sold separately.***

Reel Size	Fluid	Hose (Included)		Connection Size		Maximum Pressure psi (bar)	Part Number			Hose Guide Kit (Included)	Recommended Hose Inlet Kit
		ID in (mm)	Length ft (m)	Inlet	Outlet		Metallic Blue	White	Yellow		
XD 20	Air/Water/ Anti-Freeze/ Windshield Washer Fluid	3/8 (10)	65 (20)	1/2 NPSM(M)	3/8 NPT(M)	300 (20.7)	24C246	24C245	24C247	15Y478	218549
		1/2 (13)	50 (15)	1/2 NPSM(M)	1/2 NPT(M)	300 (20.7)	24C249	24C248	24C250		
	Oil	1/2 (13)	50 (15)	1/2 NPSM(M)	1/2 NPT(M)	2,000 (138)	24C252	24C251	24C253		
	Grease	3/8 (10)	50 (15)	3/8 NPSM(M)	1/4 NPT(M)	4,800 (331)	24C255	24C254	24C256		218550

XD Series Hose Reel Accessories

Oil | Gear Lube | ATF | Grease | Air | Water | Anti-Freeze | Washer Fluid

10 / 20 / 20 HN

Ordering Information

Ball Stop Kits

XD HS models include ball stop kits. Order separately if ordering a bare reel or if needed with HN models.

Part Number	Description
222225	For 1/4 in (6 mm) ID hose (not compatible with XD30, 700 or 750)
218340	For 1/4 in to 3/8 in (6 mm to 10 mm) ID hose (not for use with XD30, 700 or 750)
218341	0.782 in ID used for 3/8 in and 1/2 in (10 mm and 13 mm) hose (not compatible with XD30, 700 or 750)
237872	1.0 in ID used for 5/8 in (16 mm) hose
237873	1.123 in ID used for 3/4 in (19 mm) hose
237874	1.374 in ID used for 1 in (25 mm) hose
24D132	For 3/8 in (10 mm) ID hose
24D133	For 1/2 in (13 mm) ID hose

Hose Inlet Kits

A hose inlet kit is required when ordering an SD reel.

Maximum Working Pressure psi (bar)	Size in (mm)	Length ft (m)	Part Number
2,000 (137)	1/2 (13)	2 (0.6)	218549
4,000 (276)	3/8 (10)		218550
5,000 (345)	1/4 (6)		224417

Mounting Channels

Accommodates up to six reels. Includes all parts necessary to mount on wall or ceiling.

Description	1 Reel	2 Reels	3 Reels	4 Reels	5 Reels	6 Reels
Enclosed Reel Mounting Channel	24N323	24N324	24N325	24N326	24N327	24N328
Open Reel Mounting Channel	24A219	24A220	24A221	24A222	24A222	24A222
I-Beam Mounting Bracket*	204741 (x 2)			204741 (x 3)		

*Secures mounting channel to I-beam without drilling – 2 are required for 1-3 reels, and 3 are required for 4-6 reels.

Ordering Information

Enclosure Kits for One Reel

Open mounting accommodates up to six reels. Includes all parts necessary to mount on wall or ceiling. Requires Enclosed Reel Mounting Channel.

Reel Size	White	Metallic Blue	Red	Black	Dark Blue	Yellow	Required End-Caps (set of 2)
XD 10	24N331	24N332	24N333	24N334	24N335	24N336	24A950
XD 20	24N337	24N339	24N340	24N341	24N342	24N343	24A951

Retrofit Adapter Kit

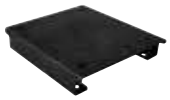

Part Number	Description
24A224	Includes all parts to mount hose reel to existing 500 series mounting pattern without enclosure
24P914	Includes all parts to convert XD20 hose reels to fit existing 500 series enclosures

Valve Hanger Kit

Part Number	Description
224444	Mounts to side of reel to allow hanging of non-metered and high-flow dispensing valves

Self-Adhesive Identification Label Set

Part Number	Description
180698	Set includes: 1 in x 5 in (25.4 mm x 127 mm) hose reels labels for Anti-Freeze, Water, SAE 5-40, SAE 10-40, SAE 20W, Hydraulic, Gear, SAE 10W, SAE 10-30, SAE 30W, Dexron, Air, Chassis, ATF

Hose Identification Wraps

Vinyl hose wrap for easy identification of meter fluid.

Part Number	Description
17S659	Red
17S660	Blue
17S661	Green
17S662	Yellow
17S663	White

Oil | Gear Lube | ATF | Grease | Fuel | Pressure Wash | Air | Water | Anti-Freeze | Washer Fluid | Oil/ Waste Oil | Diesel Exhaust Fluid (DEF)

30 / 30 HN

7 Year Warranty!

High Capacity Reel

Used in applications requiring longer-range dispense and higher capacity than the standard XD 10/20 series. Ideal for use on mobile service trucks, heavy construction and industrial plants.

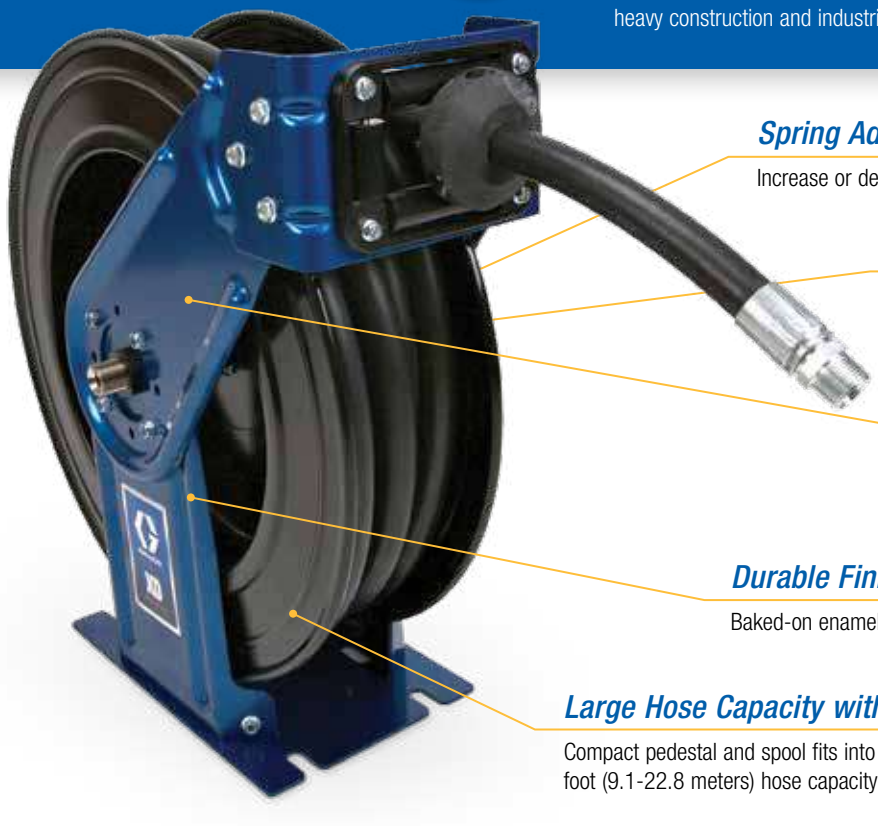

Spring Adjustment

Increase or decrease spring tension while reel is pressurized with fluid.

Full-Flow Swivel

Maximize material flow with minimal pressure drop for faster fills to get more vehicles through your shop.

Optional Adjustable Arm

Easily change to one of seven arm positions to fit your application. Order with arm (HS models) or without (HN models).

Durable Finish

Baked-on enamel finish (four colors available) protects reel from corrosion.

Large Hose Capacity with Small Profile

Compact pedestal and spool fits into tight spaces and can accommodate 30-75 foot (9.1-22.8 meters) hose capacity for a wide variety of applications.

Typical Applications

- Heavy-duty truck dealers
- Fleet maintenance
- Mining maintenance
- Public works garage
- Construction vehicle maintenance
- Heavy-duty mobile service trucks
- Mining
- Lube trucks

Typical Fluids Handled

- Petroleum- and synthetic-based oils (motor, gear and ATF)
- Diesel fuel
- Air
- Water
- Grease
- Anti-freeze
- Windshield washer fluid
- Pressure wash
- Waste oil evacuation
- Diesel exhaust fluid (DEF)

Technical Specifications

Operating Temperature Range	
Air/Water/Anti-Freeze/ Windshield Washer Fluid	-40°F to 180°F (-40°C to 82°C)
Oil	-40°F to 180°F (-40°C to 82°C)
Grease	-40°F to 180°F (-40°C to 82°C)
Pressure Wash	-20°F to 225°F (-28°C to 107°C)
Fuel/Evacuation	-40°F to 120°F (-40°C to 49°C)
Diesel Exhaust Fluid (DEF)	12°F to 140°F (-11°C to 60°C)
Wetted Parts (Bare Reel Only)	
Air/Water/Anti-Freeze/ Windshield Washer Fluid Reels	Nickel plated carbon steel, aluminum, Buna-N rubber, UHMWPE
Oil	Nickel plated carbon steel, aluminum, Buna-N rubber, UHMWPE
Grease	Nickel plated stainless steel, Buna-N rubber, UHMWPE
Pressure Wash	Nickel plated stainless steel, Buna-N rubber, UHMWPE
Fuel/Evacuation	Nickel plated carbon steel, aluminum, Buna-N rubber, UHMWPE
Diesel Exhaust Fluid (DEF)	Zinc plated steel, polyurethane, steel
Weight (Without Hose)	98 lb (44.5 kg)
Sound Pressure Level	85.8 dB(A)
Sound Power Level	94.9 dB(A)
Instruction Manual	3A0138

Dimensions

	HS Models (with Adjustable Arm)	HN Models (without Arm)
A	9.0 in (229 mm)	7.5 in (196 mm)
B	21.5 in (546 mm)	18.1 in (460 mm)
C	26.0 in (659 mm)	23.4 in (594 mm)
D	22.1 in (562 mm)	20.0 in (508 mm)
E	23.1 in (588 mm)	21.0 in (533 mm)
F	27.6 in (701 mm)	25.2 in (640 mm)

HS Models

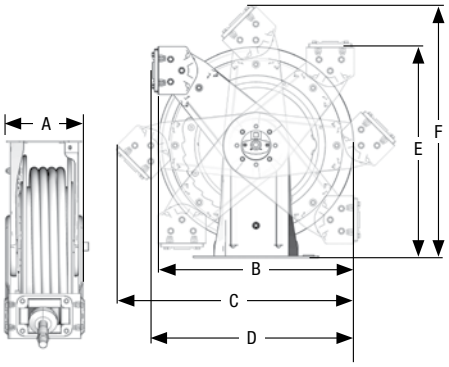

HN Models

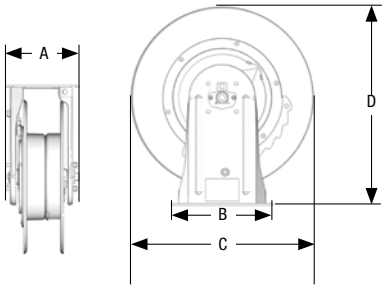

Typical Mounting Configurations

Ceiling Mount

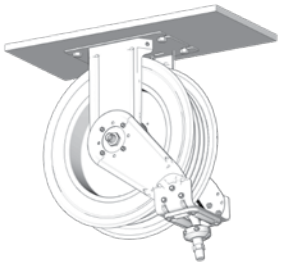

Wall Mount

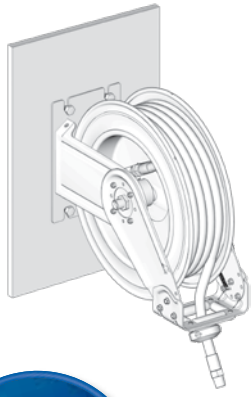

Bench/ Truck Mount

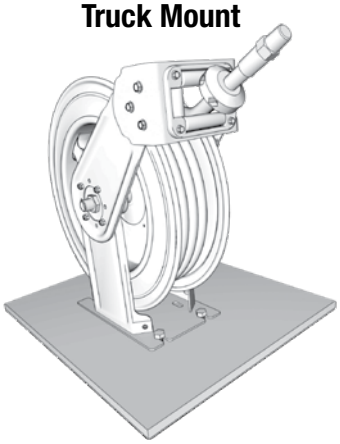

Truck Mount with Remote Mounted Roller Guide

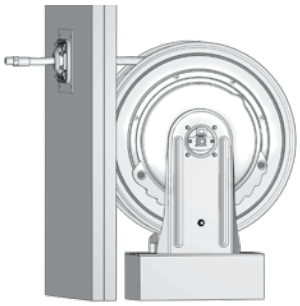

Metallic Blue (B)
Standard In-Stock Color

Available in **4 Colors**
Consult factory for lead times.

Yellow (F) **White (A)** **Desert Sand (G)**

Ordering Information

XD 30 Reel Assembly Ordering Guide

XD Series reels are available in four colors. Use the chart below to determine the correct part number to order. The last character of each part number indicates the hose reel color.

Reel Color	Identifier
White	A
Metallic Blue	B
Yellow	F
Desert Sand*	G

*Desert Sand not available on HN Models.

Order Example: Arm in overhead mount position, XD 30, oil, 3/4 in ID hose, 50 ft hose length

1 Select your reel position: HSMD5#

2 Select your reel color: (from Reel Assembly Ordering Guide – opposite) Metallic Blue = "B"

Order Part Number: HSMD5B

HS Models (with Adjustable Arm)

Reel Assemblies

Assembly includes hose, ball stop kit and roller guide. ***Required hose inlet kit sold separately.***

Fluid	Hose (Included) ID in (mm)	Hose (Included) Length ft (m)	Connection Size Inlet	Connection Size Outlet	Maximum Pressure psi (bar)	Reel, Hose and Ball Stop Assembly Part Number	Recommended Hose Inlet Kit
Air/Water/Anti-Freeze/ Windshield Washer Fluid	1/2 (13)	75 (23)	1/2 NPSM(M)	1/2 NPT(M)	300 (20.7)	HSLC8#	218549
	3/4 (19)	50 (15)	3/4 NPSM(M)	3/4 NPT(M)	300 (20.7)	HSLD5#	24E284
Oil	1/2 (13)	75 (23)	1/2 NPSM(M)	1/2 NPT(M)	1,500 (103)	HSMC8#	218549
	3/4 (19)	50 (15)	3/4 NPSM(M)	3/4 NPT(M)	1,250 (86)	HSMD5#	24E284
Grease	1/2 (13)	50 (15)	1/2 NPSM(M)	1/2 NPT(M)	5,000 (345)	HSHC5#	24E283
	3/8 (10)	75 (23)	1/2 NPSM(M)	3/8 NPT(F)	5,000 (345)	HSHB7#	24E283
Pressure Wash	3/8 (10)	75 (23)	1/2 NPSM(M)	3/8 NPT(M)	4,000 (276)	HSPB8#	24E283
	1/2 (13)	50 (15)	1/2 NPSM(M)	1/2 NPT(M)	4,500 (310)	HSPC5#	24E283
Fuel/Oil Evacuation	1 (13)	30 (9)	3/4 NPSM(M)	1 NPT(M)	125 (8.6)	HSLE3#	24E285
DEF	3/4 (19)	50 (15)	3/4 BSPP(M)	3/4 BSPP ORB	50 (3.4)	HSDD5#	24W250 (BSPP)

Bare Reels

Required hose inlet kit sold separately.

Fluid	Hose (Not Included) ID in (mm)	Hose (Not Included) Length ft (m)	Connection Size Inlet in (mm)	Connection Size Outlet in (mm)	Maximum Pressure psi (bar)	Part Number	Recommended Hose Inlet Kit
Oil	1/2 (13)	75 (23)	1/2 (13) (m)	1/2 (13) (m)	2,000 (138)	HSMCF#	218549
	3/4 (19)	50 (15)	3/4 (19) (m)	3/4 (19) (m)	2,000 (138)	HSMDD#	24E284
Grease	1/2 (13)	50 (15)	1/2 (13) (m)	1/2 (13) (m)	5,000 (345)	HSHCD#	24E283
Pressure Wash	3/8 (10)	75 (23)	1/2 (13) (m)	3/8 (10) (m)	4,000 (276)	HSHFF#	24E283
DEF	3/4 (19)	50 (15)	3/4 (19) (m)	3/4 (19) ORB	50 (3.4)	HSDDD#	24W250 (BSPP)

Ordering Information

HN Models (without Adjustable Arm)

Reels with Hose

Required hose inlet kit sold separately.

Fluid	Hose (Included)		Connection Size		Maximum Pressure psi (bar)	Reel and Hose Assembly Part Number	Recommended Hose Inlet Kit
	ID in (mm)	Length ft (m)	Inlet	Outlet			
Air/Water/Anti-Freeze/ Windshield Washer Fluid	1/2 (13)	75 (23)	1/2 NPSM(M)	1/2 NPT(M)	300 (20.7)	HNLC8#	218549
	3/4 (19)	50 (15)	3/4 NPSM(M)	3/4 NPT(M)	300 (20.7)	HNLD5#	24E284
Oil	1/2 (13)	75 (23)	1/2 NPSM(M)	1/2 NPT(M)	1,500 (103)	HNMC8#	218549
	3/4 (19)	50 (15)	3/4 NPSM(M)	3/4 NPT(M)	1,250 (86)	HNMD5#	24E284
Grease	1/2 (13)	50 (15)	1/2 NPSM(M)	1/2 NPT(M)	5,000 (345)	HNHC5#	24E283
	3/8 (10)	75 (23)	1/2 NPSM(M)	3/8 NPT(F)	5,000 (345)	HNHB7#	24E283
Pressure Wash	3/8 (10)	75 (23)	1/2 NPSM(M)	3/8 NPT(M)	4,000 (276)	HNPB8#	24E283
	1/2 (13)	50 (15)	1/2 NPSM(M)	1/2 NPT(M)	4,500 (310)	HNPC5#	24E283
Fuel/Oil Evacuation	1 (13)	30 (9)	3/4 NPSM(M)	1 NPT(M)	125 (8.6)	HNLE3#	24E285

Bare Reels

Required hose inlet kit sold separately.

Fluid	Hose (Not Included)		Connection Size		Maximum Pressure psi (bar)	Part Number	Recommended Hose Inlet Kit
	ID in (mm)	Length ft (m)	Inlet in (mm)	Outlet in (mm)			
Oil	3/4 (19)	50 (15)	3/4 (19) (m)	3/4 (19) (m)	2,000 (138)	HNMDD#	24E284
Grease	1/2 (13)	50 (15)	1/2 (13) (m)	1/2 (13) (m)	5,000 (345)	HNHCD#	24E283
Pressure Wash	3/8 (10)	75 (23)	1/2 (13) (m)	3/8 (10) (m)	4,000 (276)	HNHFF#	24E283

Ball Stop Kits

XD HS models include ball stop kits. Order separately if ordering a bare reel or if needed with HN models.

Part Number	Description
222225	For 1/4 in (6 mm) ID hose (not compatible with XD30, 700 or 750)
218340	For 1/4-3/8 in (6-10 mm) ID hose (not for use with XD30, 700 or 750)
218341	0.782 in ID used for 3/8 in and 1/2 in (10 mm and 13 mm) hose (not compatible with XD30, 700 or 750)
237872	1.0 in ID used for 5/8 in (16 mm) hose
237873	1.123 in ID used for 3/4 in (19 mm) hose
237874	1.374 in ID used for 1 in (25 mm) hose
24D132	For 3/8 in (10 mm) ID hose
24D133	For 1/2 in (13 mm) ID hose

Ordering Information

Hose Inlet Kits

A hose inlet kit is required when ordering an XD reel.

Part Number	Description
218549	1/2 in (13 mm) hose inlet kit for air/water and oil. 2,000 psi (137 bar), 1/2 in NPT hose inlet ID, 24 in (610 mm) long
24E284	3/4 in (19 mm) hose inlet kit for air/water and oil. 1,250 psi (86 bar), 3/4 in NPT hose inlet ID, 24 in (610 mm) long
24E283	1/2 in (13 mm) hose inlet kit for grease or pressure wash. 5,000 psi (345 bar), 1/2 in NPT hose inlet ID, 24 in (610 mm) long
24E285	1/2 in (13 mm) hose inlet kit for fuel. 125 psi (8.6 bar), 1/4 in NPT hose inlet ID, 24 in (610 mm) long
24W250	2 ft DEF inlet hose kit for XD 30 reels. 3/4 in BSPP(F) x cut end and 90° elbow
24W251	6 ft DEF inlet hose kit for XD 30 reels. 3/4 in BSPP(F) x cut end and 90° elbow
124875	2 ft DEF hose, 3/4 in BSPP(M) x cut end (inlet hose)
124581	6 ft DEF hose, 3/4 in BSPP(M) x cut end (inlet hose)

Valve Hanger Kit

Part Number	Description
224444	Mounts to side of reel to allow hanging of non-metered and high-flow dispensing valves

Self-Adhesive Identification Label Set

Part Number	Description
180698	Set includes: 1 in x 5 in (25.4 mm x 127 mm) hose reels labels for Anti-Freeze, Water, SAE 5-40, SAE 10-40, SAE 20W, Hydraulic, Gear, SAE 10W, SAE 10-30, SAE 30W, Dexron, Air, Chassis, ATF

Hose Identification Wraps

Vinyl hose wrap for easy identification of meter fluid.

Part Number	Description
17S659	Red
17S660	Blue
17S661	Green
17S662	Yellow
17S663	White

7 Year Warranty!

Built-In Toughness

Engineered to take a beating and still reliably perform in harsh environments so it's ready when you need it. Choose from more colors, thread types and hoses or choose the bare reel so you can customize it with your hose. You get a professional look, easier fit and better-performing equipment.

Extensive Hose Offering

Standard models come complete with factory-installed hoses on the reel. Large selection of optional reels to fit various applications.

Full-Flow Swivel

Maximize material flow with minimal pressure drop for faster fills to get more vehicles through your shop.

Rugged and Durable Body

Heavy-duty welded spool and ribbed frame for extra strength and toughness over the long haul.

Meets Worldwide Needs

Built standard with 90° elbow with NPT, BSPP or BSPT threads. 1-1/2 in models also include 2 in Victaulic™*-style groove. Accessories attach without the need for adapters.

Typical Applications

- Heavy-duty truck dealers
- Fleet maintenance
- Mining maintenance
- Public works garages
- Construction vehicle maintenance
- Heavy-duty mobile service trucks
- Agriculture
- Lube trucks

Typical Fluids Handled

- Petroleum- and synthetic-based oils (motor, gear and ATF)
- Diesel fuel
- Air
- Water
- Anti-freeze
- Waste oil evacuation

Technical Specifications

Operating Temperature Range	
Oil Reels – 1 inch	-20°F to 180°F (-28°C to 82°C)
All Other Reels	-40°F to 180°F (-40°C to 82°C)
Wetted Parts	Carbon steel, nickel plated cast iron, Buna-N rubber, FKM UHMWPE
Maximum Recommended Mounting Height	15 ft (4.6 m)
Sound Pressure Level	77.6 dB(A)
Sound Power Level	86.8 dB(A)

*Victaulic is a trademark of Victaulic Company of America.

How to Select an XD 40/50 Hose Reel

2 Ways to Order!

Option 1 – Reel with Hose

(Pages 242-243)

All models include the hose, hose guide and ball stop kit.

Option 2 – Bare Reel

(Pages 242-243)

Bare reel models do not include hose and ball stop kit.

Choose Your Accessories (Pages 244)

Hose Inlet Kit

A hose inlet is required for installation. They are appropriately sized for the hose reels based on type of fluid, hose size and pressure.

Support Arm

For additional support, add arm brackets to the reel. Required for overhead mounting applications.

Mounting Kit

Overhead mounting options available for XD 40 reels.

Hose Kit

Large selection of hoses appropriately sized for the hose reels based on type of fluid, hose size and pressure.

Hose Inlet Kit

A hose inlet is required for installation. They are appropriately sized for the hose reels based on type of fluid, hose size and pressure.

Ball Stop Kit

When the ball stop comes in contact with the hose guide, the hose is prohibited from rewinding.

Support Arm

For additional support, add arm brackets to the reel. Required for overhead mounting applications.

Mounting Kit

Overhead mounting options available for XD 40 reels.

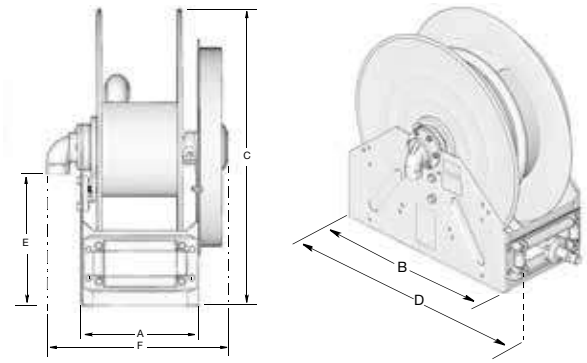

Dimensions

Model	Inlet/Outlet Size NPT(F)	Dimensions in (mm)*					
		A	B	C	D	E	F
XD 4010 – Model 1	1 in/1 in	11.83 (300)	24 (610)	26.13 (664)	26.4 (671)	10.91 (277)	16.54 (420)
XD 4010 – Model 2	1 in/1 in	11.83 (300)	24 (610)	26.13 (664)	26.4 (671)	10.91 (277)	17.47 (444)
XD 5010	1 in/1 in	11.83 (300)	28.5 (724)	30.13 (765)	29.4 (747)	10.91 (277)	17.4 (444)
XD 5015	1-1/2 in/ 1-1/2 in	11.83 (300)	28.5 (724)	30.13 (765)	29.4 (747)	10.91 (277)	18.24 (463)

*For complete list of dimensions, see Graco product manual 3A2990.

Typical Mounting Configurations

Truck-Bed or Bench Mount

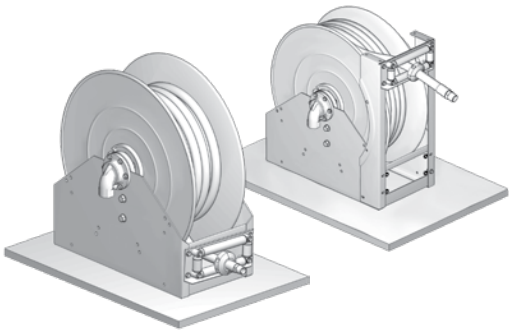

Overhead Mount (XD 40 only)

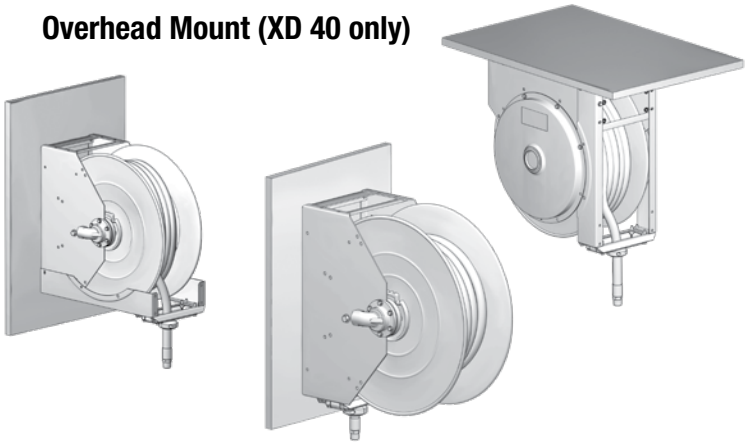

Available in **3 Colors**
Consult factory for lead times.

Standard In-Stock Color:
Metallic Blue

Ordering Information

XD 40 Reels with Hose

Includes hose, ball stop kit and hose guide. ***Required hose inlet kit sold separately.***

Reel Size	Fluid	Hose		Connection Size		Maximum Pressure psi (bar)	Part Number by Reel Color			Hose Inlet Kit (Order Separately)	Truck/Bench Mount Only
		ID in (mm)	Length ft (m)	Inlet NPT(F)	Outlet NPT(M)		Metallic Blue	Yellow	White		
XD 4010	Air/Water	1/2 (13)	100 (30)	1	1/2	300 (21)	24P327	24P328	24P329	24R111	
		3/4 (19)	75 (23)	1	3/4	300 (21)	24P330	24P331	24P332		
		3/4 (19)	100 (30)	1	3/4	300 (21)	24P333	24P334	24P335		
		1 (25)	50 (15)	1	1	300 (21)	24P336	24P337	24P338		
	Anti-Freeze	3/4 (19)	100 (30)	1	3/4	300 (21)	24P984	24P985	24P986		
	Oil	1/2 (13)	100 (30)	1	1/2	2,000 (138)	24P339	24P340	24P341		
		3/4 (19)	75 (23)	1	3/4	1,500 (103)	24P342	24P343	24P344		•
		3/4 (19)	75 (23)	1	3/4	1,500 (103)	24R857	24R859	24R860		
		3/4 (19)	100 (30)	1	3/4	1,500 (103)	24P345	24P346	24P347		
		1 (25)	50 (15)	1	1	1,275 (88)	24P348	24P349	24P350		•
		1 (25)	50 (15)	1	1	1,275 (88)	24R861	24R862	24R863		
	Waste Oil Evacuation	1 (25)	50 (15)	1	1	250 (17)	24P351	24P352	24P353	24R112	
	Diesel Fuel	1 (25)	50 (15)	1	1	250 (17)	24P354	24P355	24P356	24R115	

XD 40 Bare Reels

Reel Size	Fluid	Hose Length Capacity (in x ft (m))			Connection Size		Maximum Pressure psi (bar)	Part Number by Reel Color			Hose Inlet Kit (order separately)	Truck/ Bench Mount Only
		1/2	3/4	1	Inlet NPT(F)	Outlet NPT(F)		Metallic Blue	Yellow	White		
XD 4010	Air/Water	100 (30)	75 (23)	50 (15)	1	1	600 (41)	24P313	24P315	24P316	24R111	
		–	100 (30)	–	1	1	600 (41)	24P317	24P318	24P319		
	Anti-Freeze	–	100 (30)	100 (30)	1	1	600 (41)	26A140	26A141	26A142		
	Oil	–	75 (23)	50 (15)	1	1	2,000 (138)	24P320	24P322	24P323		•
		–	75 (23)	50 (15)	1	1	2,000 (138)	24R854	24R855	24R856		
		100 (30)	100 (30)	–	1	1	2,000 (138)	24P324	24P325	24P326		
	Waste Oil Evacuation	–	–	75 (23)	1	1	600 (41)	24P317	24P318	24P319	24R112	
	Diesel Fuel	–	–	50 (15)	1	1	600 (41)	24P317	24P318	24P319	24R115	

Remember to Order!

Ball Stop Kit
See page 244

Support Arm
See page 244

Hose
See page 256-257

Hose Inlet
See page 244

Ordering Information

XD 50 Reels with Hose

Includes hose, ball stop kit and hose guide. ***Required hose inlet kit sold separately.***

Reel Size	Fluid	Hose		Connection Size		Maximum Pressure psi (bar)	Part Number by Reel Color			Hose Inlet Kit (Order Separately)
		ID in (mm)	Length ft (m)	Inlet NPT(F)	Outlet NPT(M)		Metallic Blue	Yellow	White	
XD 5010	Air/Water	1 (25)	75 (23)	1	1	300 (21)	24P470	24P471	24P472	24R111
		1 (25)	100 (30)	1	1	300 (21)	24P473	24P474	24P475	
	Anti-Freeze	1 (25)	100 (30)	1	1	300 (21)	24P987	24P988	24P989	
	Oil	1 (25)	75 (23)	1	1	1,275 (88)	24P476	24P477	24P478	
	Diesel Fuel	1 (25)	75 (23)	1	1	250 (17)	24P485	24P486	24P487	24R115
		1 (25)	100 (30)	1	1	250 (17)	24P488	24P489	24P490	
XD 5015**	Waste Oil Evacuation	1-1/4 (32)	35 (11)	1-1/2	1-1/4	200 (14)	24P479	24P480	24P481	–
		1-1/4 (32)	50 (15)	1-1/2	1-1/4	200 (14)	24P482	24P483	24P484	
	Diesel Fuel	1-1/4 (32)	35 (11)	1-1/2	1-1/4	250 (17)	24P491	24P492	24P493	24R117
		1-1/4 (32)	50 (15)	1-1/2	1-1/4	250 (17)	24P494	24P495	24P496	
		1-1/2 (38)	50 (15)	1-1/2	1-1/2	150 (10)	24P497	24P498	24P499	

**Standard 2 inch Vitaulic™-style groove on inlet.

XD 50 Bare Reels

Reel Size	Fluid	Hose Length Capacity (in x ft (m))			Connection Size		Maximum Pressure psi (bar)	Part Number by Reel Color			Hose Inlet Kit (order separately)
		1	1-1/4	1-1/2	Inlet NPT(F)	Outlet NPT(F)		Metallic Blue	Yellow	White	
XD 5010	Air/Water	100 (30)	–	–	1	1	600 (41)	24P455	24P456	24P457	24R111
	Anti-Freeze	100 (30)	–	–	1	1	600 (41)	26A143	26A144	26A145	
	Oil	75 (23)	–	–	1	1	2,000 (138)	24P458	24P459	24P460	
	Diesel Fuel	100 (30)	–	–	1	1	600 (41)	24P455	24P456	24P457	24R115
		75 (23)	–	–	1	1	600 (41)	24P464	24P465	24P466	
XD 5015**	Waste Oil Evacuation	–	50 (15)		1-1/2	1-1/2	600 (41)	24P461	24P462	24P463	–
	Diesel Fuel	–	50 (15)	–	1-1/2	1-1/2	600 (41)	24P461	24P462	24P463	24R117
		–	50 (15)	50 (15)	1-1/2	1-1/2	600 (41)	24P467	24P468	24P469	

**Standard 2 inch Vitaulic™-style groove on inlet.

Remember to Order!

Ball Stop Kit
See page 244

Support Arm
See page 244

Hose
See page 256-257

Hose Inlet
See page 244

Victaulic is a trademark of Victaulic Company of America.

Ordering Information

Ball Stop Kits

Part Number	Description
237873	Ball stop kit used for 3/4 in (19 mm) hose
237874	Ball stop kit used for 1 in (25 mm) hose
24R060	Ball stop kit used for a 1-1/4 in (32 mm) hose
24R061	Ball stop kit used for a 1-1/2 in (38 mm) hose

Hose Guides

Part Number	Description
24R072	Roller guide kit with bracket for XD 40 and XD 60
24R074	Roller guide kit with bracket for XD 50

Support Arm Kits

Part Number	Description
24R076	Support arm kit for XD 40
24R077	Support arm kit for XD 50

Mounting Kit

Part Number	Description
237932	Overhead or wall mounting kit for XD 40. Includes all parts needed for ceiling mounting 1 reel.

Hose Inlet Kits

Part Number	Description
24R111	1 in (25 mm) hose inlet kit for air/water and oil. 1,275 psi (88 bar), 1 in NPT hose inlet ID, 28 in (710 mm) long
24R112	1 in (25 mm) hose inlet kit for waste oil evacuation. 250 psi (17 bar), 1 in NPT hose inlet ID, 28 in (710 mm) long
24R115	1 in (25 mm) hose inlet kit for diesel fuel. 250 psi (17 bar), 1 in NPT hose inlet ID, 28 in (710 mm) long
24R117	1-1/2 in (38 mm) hose inlet kit for diesel fuel. 150 psi (10 bar), 1.5 in NPT hose inlet ID, 28 in (710 mm) long

Self-Adhesive Identification Label Set

Part Number	Description
180698	Set includes: 1 in x 5 in (25.4 mm x 127 mm) hose reels labels for Anti-Freeze, Water, SAE 5-40, SAE 10-40, SAE 20W, Hydraulic, Gear, SAE 10W, SAE 10-30, SAE 30W, Dexron, Air, Chassis, ATF

Hose Identification Wraps

Vinyl hose wrap for easy identification of meter fluid

	Part Number	Description
	17S659	Red
	17S660	Blue
	17S661	Green
	17S662	Yellow
	17S663	White

Notes

XD Series Powered Bare Hose Reels

Oil | Gear Lube | ATF | Grease | Fuel | Air | Water | Oil/ Waste Oil

60 / 70 / 80

7 Year Warranty!

Safe, Versatile Powered Hose Reels

We like to think of the XD motor rewind reels as super-powered. The innovative design is packed with features to help you work safer, smarter and faster. We demand extensive product testing, often exceeding industry standards to ensure you get the best product on the market.

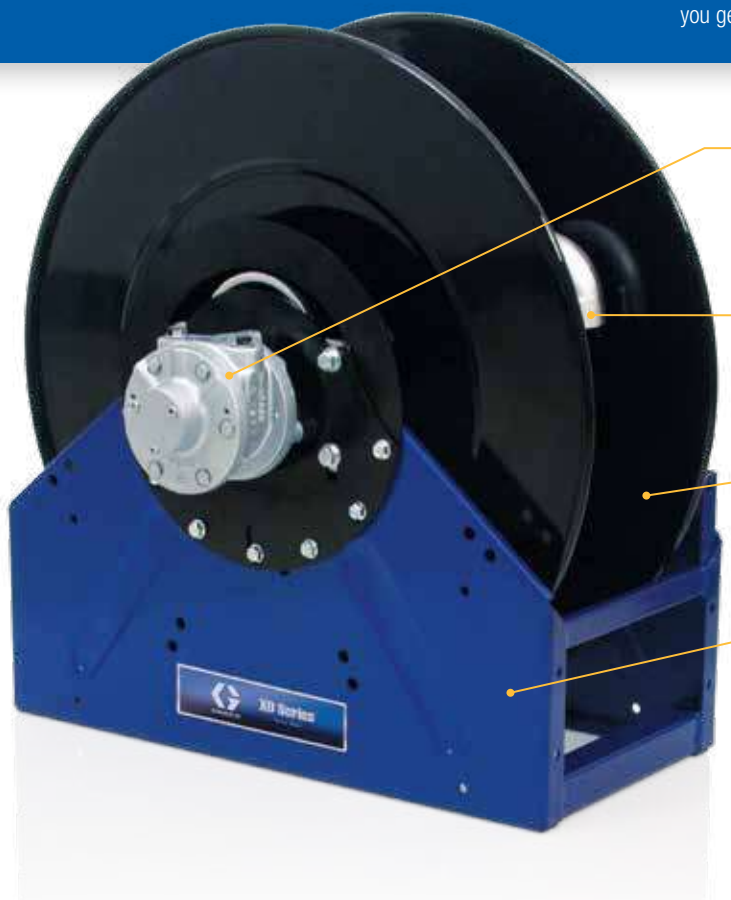

Safe, Reliable Direct Drive and Gear Motors

Drive unit is clean and lubricated for life. No need to worry about greasy, exposed drive chains that need maintenance and can be dangerous to operators.

Easy System Integration

Easily change the inlet and motor direction to give you the option of a right- or left-hand flow orientation.

Heavy-duty Welded Spool

Built to handle the weight of heavy hoses. Designed to surround and protect the drive unit from the elements to promote longer-lasting, safer operation.

Rugged and Durable Body

Heavy-duty one piece welded frame is engineered to flex under extreme operating conditions and is stronger than bolted frames that can loosen with use. Individually painted and powder-coated components have superior corrosion resistance over assembled and painted products.

Hose and Cord Reels

Typical Applications

- Heavy-duty truck dealers
- Fleet maintenance
- Mining maintenance
- Public works garages
- Construction vehicle maintenance
- Heavy-duty mobile service trucks
- Agriculture
- Lube trucks

Typical Fluids Handled

- Petroleum- and synthetic-based oils (motor, gear and ATF)
- Diesel fuel
- Air
- Water
- Grease
- Waste oil evacuation

Technical Specifications

Operating Temperature Range	
Motorless Reels	-40°F to 180°F (-40°C to 82°C)
Air/Water Applications	-40°F to 180°F (-40°C to 82°C)
Waste Oil Evacuation Applications	-40°F to 180°F (-40°C to 82°C)
Oil Applications	-40°F to 180°F (-40°C to 82°C)
Grease Applications	0°F to 180°F (-18°C to 82°C)
Diesel Fuel Applications	-40°F to 140°F (-40°C to 60°C)
Wetted Parts	Nickel plated cast iron, cast iron, Buna-N rubber, polyethylene
Electric and Hydraulic Motors Sound Pressure Level	<80 dB(A)
Pneumatic Motors Sound Pressure Level	84.6 dB(A)
Pneumatic Motors Sound Power Level	89.9 dB(A)
Instruction Manual	332630

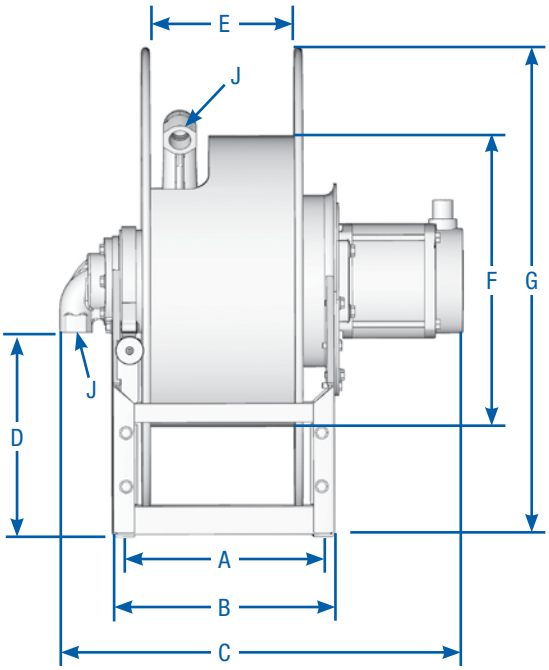

Dimensions

Reference dimension "D" for specific motor type

Model	Inlet/Outlet Size (J) NPT(F)	Dimensions in (mm)								
		A (Mounting Holes)	B	C			D	E	F	G
				Pneumatic	Hydraulic	Electric				
XD6010	1 in/1 in	10.45 (256)	11.8 (300)	20.4 (519)	15.7 (400)	21.6 (547)	10.9 (277)	7.8 (198)	15.5 (394)	26.1 (663)
XD7010	1 in/1 in	12.95 (329)	14.3 (363)	22.9 (583)	18.2 (463)	24.1 (611)	10.9 (277)	10 (254)	10 (254)	26.1 (663)
XD7015	1-1/2 in/ 1-1/2 in	12.95 (329)	14.3 (363)	23.7 (603)	19 (483)	24.8 (631)	10.9 (277)	10 (254)	10 (254)	26.1 (663)
XD7020	2 in/2 in	12.95 (329)	14.3 (363)	24.1 (613)	19.4 (493)	25.2 (641)	10.2 (259)	10 (254)	10 (254)	26.1 (663)
XD8010	1 in/1 in	20.68 (525)	22.1 (561)	30.7 (779)	26 (659)	31.8 (807)	13.4 (340)	18 (457)	15.5 (394)	30.1 (765)
XD8015	1-1/2 in/ 1-1/2 in	20.68 (525)	22.1 (561)	31.4 (799)	26.7 (679)	32.5 (827)	13.4 (340)	18 (457)	15.5 (394)	30.1 (765)
XD8020	2 in/2 in	20.68 (525)	22.1 (561)	31.9 (809)	27.1 (689)	33 (837)	12.7 (323)	18 (457)	15.5 (394)	30.1 (765)

Typical Mounting Configurations

Bench/Trunk Mount

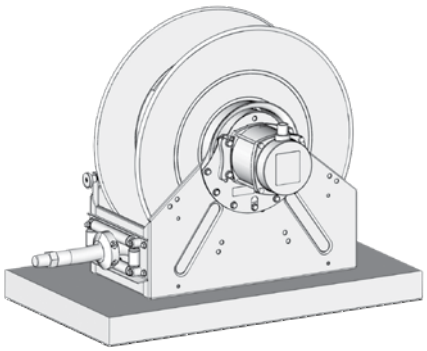

Truck Mount with Remote Mounted Roller Guide

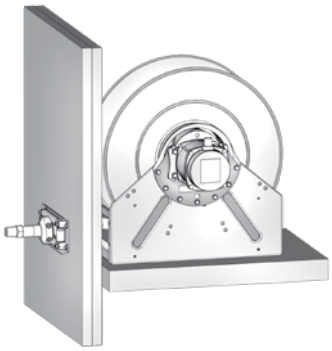

How to Select an XD Powered Bare Hose Reel

A Complete Family of Motor Rewind Hose Reels

The innovative design of the XD reel family is packed with features to help you work safer, smarter and faster. Direct-drive motor options include hydraulic, pneumatic and electric for air, water, oil, grease, fuel dispense and waste oil evacuation applications. Use this selection chart to configure the XD reel to suit your needs.

A — Specify the Hose Fluid Type and Capacity

REQUIRED

Determine your fluid type and capacity before selecting your reel.

Fluid Type	Hose ID in (mm)	Hose Length ft (m)
☐ Air/Water	☐ 1/2 (13)	☐ 50 (15)
☐ Anti-Freeze	☐ 1 (25)	☐ 75 (23)
☐ Petroleum- and Synthetic-Based Oils	☐ 1-1/2 (38)	☐ 100 (30)
☐ Waste Oil	☐ 2 (51)	☐ 150 (46)
☐ Diesel Fuel		

B — Choose Your Reel Size

REQUIRED

☐ XD 60 ☐ XD 70 ☐ XD 80

C — Choose Your Reel Color

REQUIRED

Select from Blue, Yellow or White.

☐ Blue ☐ Yellow ☐ White

D — Select Your Drive Type and Frame

REQUIRED

Reels can be ordered with a motor or without. If you choose a model without a motor, you must purchase the motor separately.

☐ Order Reel with Motor Included (Pages 250-252)

☐ Order Reel and Motor Separately (Page 263)

- ☐ Pneumatic Motor
- ☐ Hydraulic Motor
- ☐ Electric Motor
  - ☐ 12 VDC, 1/2 HP
  - ☐ 12 VDC, 2/3 HP
  - ☐ 24 VDC, 1/2 HP
  - ☐ 24 VDC, 2/3 HP
  - ☐ 115 VAC, 0.40 HP

E — Choose Your Controls (Pages 254)

REQUIRED

☐ **Pneumatic Motor**
- ☐ Pneumatic 2-position, 3-way valve

☐ **Hydraulic Motor**
- ☐ 12 VDC electric control of hydraulic motor, 3-position, 4-way valve
- ☐ 12 VDC electric control of hydraulic motor with switch, 3-position, 4-way valve
- ☐ 24 VDC electric control of hydraulic motor, 3-position, 4-way valve
- ☐ 24 VDC electric control of hydraulic motor with switch, 3-position, 4-way valve

☐ **Electric Motor**
- ☐ Hazardous location on/off button
- ☐ 12 VDC intermittent-duty solenoid
- ☐ 24 VDC intermittent-duty solenoid
- ☐ Manual reset button circuit breaker (25 or 50 amp)

F — Hose Inlet Kit (Page 255)

REQUIRED FOR INSTALLATION

A hose inlet is required for installation. They are appropriately sized for the hose reels based on type of fluid, hose size and pressure.

Note: All 1-1/2 in (38 mm) hose reels include a 2 in (51 mm) Victaulic-style groove on inlet. If you are using these reels, it is recommended to order an inlet kit from Graco.

☐ Yes (required for installation)

☐ No (will supply my own hose inlet kit)

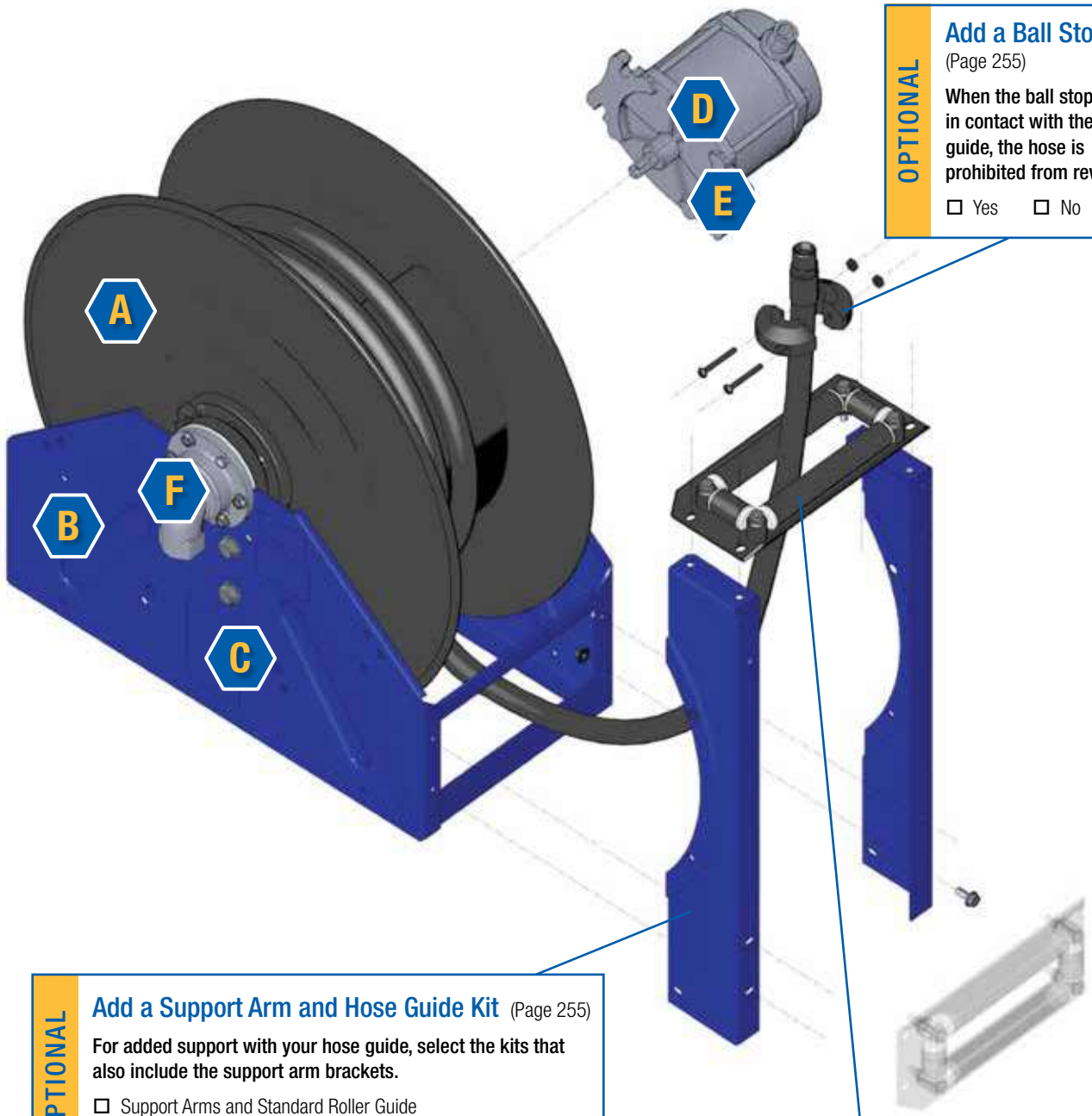

OPTIONAL

Add a Ball Stop Kit

(Page 255)

When the ball stop comes in contact with the hose guide, the hose is prohibited from rewinding.

☐ Yes ☐ No

OPTIONAL

Add a Support Arm and Hose Guide Kit

(Page 255)

For added support with your hose guide, select the kits that also include the support arm brackets.

☐ Support Arms and Standard Roller Guide

☐ Support Arms and Fixed, Stainless Steel Hose Guide

OPTIONAL

Add a Hose Guide Kit

(Page 255)

Select between a fixed, stainless steel hose guide or a general roller guide.

Hose guide mounts directly to the reel frame or in three different positions on the support arm.

☐ Standard Roller Guide

☐ Fixed, Stainless Steel Hose Guide

XD Series Bare Hose Reels

Oil | Gear Lube | ATF | Grease | Fuel | Air | Water | Oil/ Waste Oil

60 / 70 / 80

Ordering Information

Reel with Motor – 1 in (25 mm) Inlet/Outlet

XD 60 Reels

Reel Size	Fluid	Motor	Hose Capacity of Reel ft (m) Hose ID in (mm) 1/2 (13)	3/4 (19)	1 (25)	Maximum Pressure psi (bar)	Weight lb (kg)	Inlet/ Outlet Size NPT(F)	Reel Part Number by Color: Metallic Blue	Yellow	White	Hose Accessories (Must be ordered separately): Hose Inlet Kit	Hose
XD 6010	Air/ Water	Pneumatic	100 (30)	100 (30)	50 (15)	600 (41)	123 (56)	1 in/1 in (25 mm/ 25 mm)	24R419	24R420	24R421	24R111	126359 – 1/2 in x 100 ft (13 mm x 30 m)
		Hydraulic	100 (30)	100 (30)	50 (15)	600 (41)	101 (45)		24R414	24R415	24R416		
		12 VDC Electric, 1/2 HP	100 (30)	100 (30)	50 (15)	600 (41)	133 (60)		24R404	24R405	24R406		126360 – 3/4 in x 75 ft (19 mm x 23 m)
		24 VDC Electric, 1/2 HP	100 (30)	100 (30)	50 (15)	600 (41)	133 (60)		24R407	24R408	24R409		126361 – 3/4 in x 100 ft (19 mm x 30 m)
		115 VAC Electric	100 (30)	100 (30)	50 (15)	600 (41)	133 (60)		24R410	24R412	24R413		126362 – 1 in x 50 ft (25 mm x 15 m)
	Oil	Pneumatic	100 (30)	100 (30)	50 (15)	3,000 (207)	125 (56)	1 in/1 in (25 mm/ 25 mm)	24R434	24R435	24R436		126375 – 1/2 in x 100 ft (13 mm x 30 m)
		Hydraulic	100 (30)	100 (30)	50 (15)	3,000 (207)	103 (47)		24R431	24R432	24R433		
		12 VDC Electric, 1/2 HP	100 (30)	100 (30)	50 (15)	3,000 (207)	134 (61)		24R422	24R423	24R424		126376 – 3/4 in x 75 ft (19 mm x 23 m)
		24 VDC Electric, 1/2 HP	100 (30)	100 (30)	50 (15)	3,000 (207)	134 (61)		24R425	24R426	24R427		126377 – 3/4 in x 100 ft (19 mm x 30 m)
		115 VAC Electric	100 (30)	100 (30)	50 (15)	3,000 (207)	134 (61)		24R428	24R429	24R430		126503 – 1 in x 50 ft (25 mm x 15 m)
	Diesel Fuel	Pneumatic	100 (30)	100 (30)	50 (15)	600 (41)	123 (56)	1 in/1 in (25 mm/ 25 mm)	24R419	24R420	24R421	24R115	24R102 – 1 in x 50 ft (25 mm x 15 m)
		Hydraulic	100 (30)	100 (30)	50 (15)	600 (41)	101 (45)		24R414	24R415	24R416		
		12 VDC Electric, 1/2 HP	100 (30)	100 (30)	50 (15)	600 (41)	133 (60)		24R404	24R405	24R406		
		24 VDC Electric, 1/2 HP	100 (30)	100 (30)	50 (15)	600 (41)	133 (60)		24R407	24R408	24R409		
		115 VAC Electric	100 (30)	100 (30)	50 (15)	600 (41)	133 (60)		24R410	24R412	24R413		
	Waste Oil Evac.	Pneumatic	–	–	50 (15)	600 (41)	123 (56)	1 in/1 in (25 mm/ 25 mm)	24R419	24R420	24R421	24R112	126379 – 1 in x 50 ft (25 mm x 15 m)
		Hydraulic	–	–	50 (15)	600 (41)	101 (45)		24R414	24R415	24R416		
		12 VDC Electric, 1/2 HP	–	–	50 (15)	600 (41)	133 (60)		24R404	24R405	24R406		
		24 VDC Electric, 1/2 HP	–	–	50 (15)	600 (41)	133 (60)		24R407	24R408	24R409		
		115 VAC Electric	–	–	50 (15)	600 (41)	133 (60)		24R410	24R412	24R413		
	Grease	Pneumatic	–	–	50 (15)	3,000 (207)	125 (75)	1 in/1 in (25 mm/ 25 mm)	24R434	24R435	24R436	–	–
		Hydraulic	–	–	50 (15)	3,000 (207)	103 (47)		24R431	24R432	24R433		
		12 VDC Electric, 1/2 HP	–	–	50 (15)	3,000 (207)	134 (61)		24R422	24R423	24R424		
		24 VDC Electric, 1/2 HP	–	–	50 (15)	3,000 (207)	134 (61)		24R425	24R426	24R427		
		115 VAC Electric	–	–	50 (15)	3,000 (207)	134 (61)		24R428	24R429	24R430		

Remember to Order!

Ball Stop Kit
See page 255

Hose Guide
See page 255

Support Arm
See page 255

Hose
See page 256-257

Hose Inlet
See page 255

Ordering Information

Reel with Motor – 1 in (25 mm) Inlet/Outlet

XD 70 / XD 80 Reels

Reel Size	Fluid	Motor	Hose Capacity of Reel ft (m) Hose ID 1 in (25 mm)	Maximum Pressure psi (bar)	Weight lb (kg)	Inlet/ Outlet Size NPT(F)	Reel Part Number by Color: Metallic Blue	Yellow	White	Hose Accessories (Must be ordered separately): Hose Inlet Kit	Hose
XD 7010	Air/ Water	Pneumatic	100 (30)	600 (41)	122 (55)	1 in/1 in (25 mm/ 25 mm)	24R449	24R450	24R451	24R111	126363 – 1 in x 75 ft (25 mm x 23 m) 126364 – 1 in x 100 ft (25 mm x 30 m)
		Hydraulic	100 (30)	600 (41)	100 (45)		24R446	24R447	24R448		
		12 VDC Electric, 1/2 HP	100 (30)	600 (41)	132 (60)		24R437	24R438	24R439		
		24 VDC Electric, 1/2 HP	100 (30)	600 (41)	132 (60)		24R440	24R441	24R442		
		115 VAC Electric	100 (30)	600 (41)	132 (60)		24R443	24R444	24R445		
	Oil	Pneumatic	100 (30)	3,000 (207)	100 (56)	1 in/1 in (25 mm/ 25 mm)	24R464	24R465	24R466		126504 – 1 in x 75 ft (25 mm x 23 m) 126505 – 1 in x 100 ft (25 mm x 30 m)
		Hydraulic	100 (30)	3,000 (207)	102 (46)		24R461	24R462	24R463		
		12 VDC Electric, 1/2 HP	100 (30)	3,000 (207)	133 (60)		24R452	24R453	24R454		
		24 VDC Electric, 1/2 HP	100 (30)	3,000 (207)	133 (60)		24R455	24R456	24R457		
		115 VAC Electric	100 (30)	3,000 (207)	133 (60)		24R458	24R459	24R460		
	Diesel Fuel	Pneumatic	100 (30)	600 (41)	122 (55)	1 in/1 in (25 mm/ 25 mm)	24R449	24R450	24R451	24R115	24R103 – 1 in x 75 ft (25 mm x 23 m) 24R106 – 1 in x 100 ft (25 mm x 30 m)
		Hydraulic	100 (30)	600 (41)	100 (45)		24R446	24R447	24R448		
		12 VDC Electric, 1/2 HP	100 (30)	600 (41)	132 (60)		24R437	24R438	24R439		
		24 VDC Electric, 1/2 HP	100 (30)	600 (41)	132 (60)		24R440	24R441	24R442		
		115 VAC Electric	100 (30)	600 (41)	132 (60)		24R443	24R444	24R445		
XD 8010	Air/ Water	Pneumatic	150 (46)	600 (41)	164 (74)	1 in/1 in (25 mm/ 25 mm)	24R531	24R532	24R533	24R111	–
		Hydraulic	150 (46)	600 (41)	142 (64)		24R528	24R529	24R530		
		12 VDC Electric, 1/2 HP	150 (46)	600 (41)	173 (78)		24R519	24R520	24R521		
		24 VDC Electric, 1/2 HP	150 (46)	600 (41)	173 (78)		24R522	24R523	24R524		
		115 VAC Electric	150 (46)	600 (41)	173 (78)		24R525	24R526	24R527		
	Oil	Pneumatic	150 (46)	3,000 (207)	165 (75)	1 in/1 in (25 mm/ 25 mm)	24R546	24R547	24R548		–
		Hydraulic	150 (46)	3,000 (207)	143 (65)		24R543	24R544	24R545		
		12 VDC Electric, 1/2 HP	150 (46)	3,000 (207)	175 (79)		24R534	24R535	24R536		
		24 VDC Electric, 1/2 HP	150 (46)	3,000 (207)	175 (79)		24R537	24R538	24R539		
		115 VAC Electric	150 (46)	3,000 (207)	175 (79)		24R540	24R541	24R542		
	Diesel Fuel	Pneumatic	150 (46)	600 (41)	164 (74)	1 in/1 in (25 mm/ 25 mm)	24R531	24R532	24R533	24R115	24T252 – 1 in x 150 ft (25 mm x 46 m)
		Hydraulic	150 (46)	600 (41)	142 (64)		24R528	24R529	24R530		
		12 VAC Electric, 1/2 HP	150 (46)	600 (41)	173 (78)		24R519	24R520	24R521		
		24 VAC Electric, 1/2 HP	150 (46)	600 (41)	173 (78)		24R522	24R523	24R524		
		115 VAC Electric	150 (46)	600 (41)	173 (78)		24R525	24R526	24R527		

Remember to Order!

Ball Stop Kit
See page 255

Hose Guide
See page 255

Support Arm
See page 255

Hose
See page 256-257

Hose Inlet
See page 255

XD Series Bare Hose Reels

Oil | Gear Lube | ATF | Grease | Fuel | Air | Water | Oil/ Waste Oil

60 / 70 / 80

Ordering Information

Reel with Motor – 1-1/2 in (38 mm) Inlet/Outlet

XD 70 / XD 80 Reels

Reel Size	Fluid	Motor	Hose Capacity of Reel ft (m) Hose ID 1-1/2 in (38 mm)	Maximum Pressure psi (bar)	Weight lb (kg)	Inlet/ Outlet Size NPT(F)	Reel Part Number by Color: Metallic Blue	Yellow	White	Hose Accessories (Must be ordered separately): Hose Inlet Kit	Hose
XD 7015	Diesel Fuel	Pneumatic	65 (20)	600 (41)	100 (56)	1-1/2 in/ 1-1/2 in (38 mm/ 38 mm)	24R516	24R517	24R518	24R117	24R110 – 1-1/4 in x 50 ft (32 mm x 15 m) 24R114 – 1-1/2 in x 50 ft (38 mm x 15 m)
		Hydraulic	65 (20)	600 (41)	102 (46)		24R512	24R513	24R515		
		12 VDC Electric, 1/2 HP	65 (20)	600 (41)	133 (60)		24R503	24R504	24R505		
		24 VDC Electric, 1/2 HP	65 (20)	600 (41)	133 (60)		24R506	24R507	24R508		
		115 VAC Electric	65 (20)	600 (41)	133 (60)		24R509	24R510	24R511		
	Waste Oil Evac.	Pneumatic	50 (15)	600 (41)	100 (56)		24R516	24R517	24R518	–	126380 – 1-1/4 in x 35 ft (32 mm x 11 m) 126688 – 1-1/4 in x 50 ft (32 mm x 15 m) 127173 – 1-1/2 in x 50 ft (38 mm x 15 m)
		Hydraulic	50 (15)	600 (41)	102 (46)		24R512	24R513	24R515		
		12 VDC Electric, 1/2 HP	50 (15)	600 (41)	133 (60)		24R503	24R504	24R505		
		24 VDC Electric, 1/2 HP	50 (15)	600 (41)	133 (60)		24R506	24R507	24R508		
		115 VAC Electric	50 (15)	600 (41)	133 (60)		24R509	24R510	24R511		
XD 8015	Diesel Fuel	Pneumatic	100 (50)	600 (41)	165 (75)		24R561	24R562	24R563	24R117	24T253 – 1-1/2 in x 100 ft (38 mm x 30 m)
		Hydraulic	100 (50)	600 (41)	143 (65)		24R558	24R559	24R560		
		12 VDC Electric, 1/2 HP	100 (50)	600 (41)	175 (79)		24R549	24R550	24R551		
		24 VDC Electric, 1/2 HP	100 (50)	600 (41)	175 (79)		24R552	24R553	24R554		
		115 VAC Electric	100 (50)	600 (41)	175 (79)		24R555	24R556	24R557		

Reel with Motor – 2 in (51 mm) Inlet/Outlet

XD 70 / XD 80 Reels

Reel Size	Fluid	Motor	Hose Capacity of Reel ft (m) Hose ID 2 in (51 mm)	Maximum Pressure psi (bar)	Weight lb (kg)	Inlet/ Outlet Size NPT(F)	Reel Part Number by Color: Metallic Blue	Yellow	White	Hose Accessories (Must be ordered separately): Hose Inlet Kit	Hose
XD 7020	Diesel Fuel	Pneumatic	33 (10)	600 (41)	128 (58)	2 in/2 in (51 mm/ 51 mm)	24T023	24T024	24T025	24R118	127167 – 2 in x 33 ft (51 mm x 10 m)
		Hydraulic	33 (10)	600 (41)	106 (48)		24T020	24T021	24T022		
		12 VDC Electric, 1/2 HP	33 (10)	600 (41)	137 (62)		24T011	24T012	24T013		
		24 VDC Electric, 1/2 HP	33 (10)	600 (41)	137 (62)		24T014	24T015	24T016		
		115 VAC Electric	33 (10)	600 (41)	137 (62)		24T017	24T018	24T019		
XD 8020		Pneumatic	50 (15)	600 (41)	169 (76)		24R576	24R577	24R578		24T254 – 2 in x 50 ft (51 mm x 15 m)
		Hydraulic	50 (15)	600 (41)	147 (67)		24R573	24R574	24R575		
		12 VDC Electric, 1/2 HP	50 (15)	600 (41)	179 (81)		24R564	24R565	24R566		
		24 VDC Electric, 1/2 HP	50 (15)	600 (41)	179 (81)		24R567	24R568	24R569		
		115 VAC Electric	50 (15)	600 (41)	179 (81)		24R570	24R571	24R572		

Remember to Order!

Ball Stop Kit
See page 255

Hose Guide
See page 255

Support Arm
See page 255

Hose
See page 256-257

Hose Inlet
See page 255

Ordering Information

Reel Frames Only

XD 60 / XD 70 / XD 80 Reels

Motor is not included and must be purchased separately.

Reel Size	Fluid	Hose Capacity of Reel ft (m)					Maximum Pressure psi (bar)	Weight lb (kg)	Inlet/ Outlet Size NPT(F)	Reel Part Number by Color		
		Hose ID in (mm)								Metallic Blue	Yellow	White
		1/2 (13)	3/4 (19)	1 (25)	1-1/2 (38)	2 (51)						
XD 6010	Air/Water/ Diesel Fuel	100 (30)	100 (30)	50 (15)	–	–	600 (41)	87 (39)	1 in/1 in (25 mm/25 mm)	24T104	24T105	24T106
	Oil	100 (30)	100 (30)	50 (15)	–	–	3,000 (207)	88 (40)		24T107	24T108	24T109
	Waste Oil Evac.	–	–	50 (15)	–	–	600 (41)	87 (39)		24T104	24T105	24T106
	Grease	–	–	50 (15)	–	–	3,000 (207)	88 (40)		24T107	24T108	24T109
XD 7010	Air/Water/ Diesel Fuel	–	–	100 (30)	–	–	600 (41)	86 (39)		24T110	24T111	24T112
	Oil	–	–	100 (30)	–	–	3,000 (207)	87 (39)		24T113	24T114	24T115
XD 8010	Air/Water/ Diesel Fuel	–	–	150 (46)	–	–	600 (41)	127 (58)		24T122	24T123	24T124
	Oil	–	–	150 (46)	–	–	3,000 (207)	129 (58)		24T125	24T126	24T127
XD 7015	Waste Oil Evac.	–	–	–	50 (15)	–	600 (41)	87 (39)	1-1/2 in/ 1-1/2 in (38 mm/38 mm)	24T116	24T117	24T118
	Diesel Fuel	–	–	–	65 (20)	–	600 (41)	87 (39)		24T116	24T117	24T118
XD 8015		–	–	–	100 (30)	–	600 (41)	129 (58)		24T128	24T129	24T130
XD 7020		–	–	–	–	33 (10)	600 (41)	91 (41)	2 in/2 in (51 mm/51 mm)	24T119	24T120	24T121
XD 8020		–	–	–	–	50 (15)	600 (41)	133 (60)		24T131	24T132	24T133

Motor Assemblies – Pair with Frame-Only Models

	Part Number	Description
	24T892	Pneumatic motor assembly, reversible type. For installing motor to bare XD reel.
	24T891	Hydraulic motor assembly, reversible type. For installing motor to bare XD reel.
	24T886	12 VDC, 1/2 HP motor assembly, reversible type. For installing motor to bare XD frame.
	24T910	12 VDC, 2/3 HP motor assembly, reversible type. For installing motor to bare XD frame.
	24T888	24 VDC, 1/2 HP motor assembly, reversible type. For installing motor to bare XD frame.
	24T911	24 VDC, 2/3 HP motor assembly, reversible type. For installing motor to bare XD frame.
	24T889	115 VAC, 0.40 HP motor assembly, reversible type. For installing motor to bare XD frame.

Remember to Order!

Ball Stop Kit	**Hose Guide**	**Support Arm**	**Hose**	**Hose Inlet**
See page 255	See page 255	See page 255	See page 256-257	See page 255

Ordering Information

Motor Controls (Required)

	Part Number	Description
	127271	Pneumatic valve to control XD 60/70/80 pneumatic powered hose reels. 2-position, 3-way valve.
	24T875	Hydraulic control module for electric over hydraulic control of XD 60/70/80 hydraulic powered hose reels, 12 VDC. 3-position, 4-way valve.
	24T876	Hydraulic control module for electric over hydraulic control of XD 60/70/80 hydraulic powered hose reels, 24 VDC. 3-position, 4-way valve.
	127224	Hydraulic control module for electric over hydraulic control of XD 60/70/80 hydraulic powered hose reels, 12V, includes switch. 3-position, 4-way valve.
	127225	Hydraulic control module for electric over hydraulic control of XD 60/70/80 hydraulic powered hose reels, 24V, includes switch. 3-position, 4-way valve.
	127214	Momentary push-button on/off switch with red rubber cap. Use for 12 or 24 VDC.
	127217	Hazardous-location push-button on/off switch. Use for 12 and 24 VDC.
	127223	Hazardous-location push-button on/off switch. Use for 115 and 220 VAC.
	127218	Hazardous-location junction box
	127219	12 VDC intermittent-duty solenoid recommended for activating rewind on 12 VDC motor
	127220	24 VDC intermittent-duty solenoid recommended for activating rewind on 24 VDC motor
	127221	Manual-reset push-button circuit breaker, 50 amp rating
	127222	Manual-reset push-button circuit breaker, 25 amp rating

Ordering Information

Ball Stop Kits

Part Number	Description
237873	Ball stop kit used for 3/4 in (19 mm) hose
237874	Ball stop kit used for 1 in (25 mm) hose
24R060	Ball stop kit used for 1.25 in (32 mm) hose
24R061	Ball stop kit used for 1.5 in (38 mm) hose

Hose Guide

Part Number	Description
24T327	Stainless steel hose guide for XD 60
24T328	Stainless steel hose guide for XD 70
24T329	Stainless steel hose guide for XD 80
24R072	Roller guide kit with bracket for XD 40 and XD 60
24T330	Roller guide kit with bracket for XD 70
24T331	Roller guide kit with bracket for XD 80

Support Arm Kit with Hose Guide

Part Number	Description
24T332	Arm kit with stainless steel hose guide for XD 60 (24T327)
24T333	Arm kit with stainless steel hose guide for XD 70 (24T328)
24T334	Arm kit with stainless steel hose guide for XD 80 (24T329)
24T335	Arm kit with roller guide for XD 60 (24R072)
24T336	Arm kit with roller guide for XD 70 (24T330)
24T337	Arm kit with roller guide for XD 80 (24T331)

Hose Inlet Kits

Part Number	Description
24R111	1 in (25 mm) hose inlet kit for air/water and oil 1,275 psi (88 bar), 1 in NPT hose inlet ID, 28 in (710 mm) long
24R112	1 in (25 mm) hose inlet kit for waste oil evacuation 250 psi (17 bar), 1 in NPT hose inlet ID, 28 in (710 mm) long
24R115	1 in (25 mm) hose inlet kit for diesel fuel 250 psi (17 bar), 1 in NPT hose inlet ID, 28 in (710 mm) long
24R117	1-1/2 in (38 mm) hose inlet kit for diesel fuel 150 psi (10 bar), 1-1/2 in NPT hose inlet ID, 28 in (710 mm) long
24R118	2 in (51 mm) hose inlet kit for diesel fuel 150 psi (10 bar), 2 in NPT hose inlet ID, 28 in (710 mm) long
24T858	1-1/2 in (38 mm) hose inlet kit for waste oil evacuation 150 psi (10 bar), 1-1/2 in NPT hose inlet ID, 28 in (710 mm) long

Self-Adhesive Identification Label Set

Part Number	Description
180698	Set includes: 1 in x 5 in (25.4 mm x 127 mm) hose reels labels for Anti-Freeze, Water, SAE 5-40, SAE 10-40, SAE 20W, Hydraulic, Gear, SAE 10W, SAE 10-30, SAE 30W, Dexron, Air, Chassis, ATF

Oil | Gear Lube | ATF | Grease | Fuel | Pressure Wash | Air | Water | Anti-Freeze | Oil/ Waste Oil | Diesel Exhaust Fluid (DEF)

Ordering Information

Hose Identification Wraps

Vinyl hose wrap for easy identification of meter fluid

	Part Number	Description
	17S659	Red
	17S660	Blue
	17S661	Green
	17S662	Yellow
	17S663	White

Air/Water/Anti-Freeze Hoses

	Part Number	Description	Compatible Reel Series
	253848	3/8 in x 35 ft (10 mm x 11 m) hose for air/water, 300 psi (20.6 bar)	SD 10, XD 10
	253849	3/8 in x 50 ft (10 mm x 15 m) hose for air/water, 300 psi (20.6 bar)	SD 10, XD 10
	253850	3/8 in x 65 ft (10 mm x 20 m) hose for air/water, 300 psi (20.6 bar)	SD 20, XD 20
	253852	1/2 in x 35 ft (13 mm x 11 m) hose for air/water, 300 psi (20.6 bar)	SD 10, XD 10
	253853	1/2 in x 50 ft (13 mm x 15 m) hose for air/water, 300 psi (20.6 bar)	SD 20, XD 20
	16A684	1/2 in x 75 ft (13 mm x 23 m) hose for air/water, 300 psi (20.6 bar)	XD 30
	126359	1/2 in x 100 ft (13 mm x 30 m) hose for air/water, 300 psi (20.6 bar)	XD 40, XD 60
	16A707	3/4 in x 50 ft (19 mm x 15 m) hose for air/water, 300 psi (20.6 bar)	XD 30
	126360	3/4 in x 75 ft (19 mm x 23 m) hose for air/water, 300 psi (20.6 bar)	XD 40
	126361	3/4 in x 100 ft (19 mm x 30 m) hose for air/water, 300 psi (20.6 bar)	XD 40, XD 60
	126362	1 in x 50 ft (25 mm x 15 m) hose for air/water, 300 psi (20.6 bar)	XD 40, XD 60
	126363	1 in x 75 ft (25 mm x 23 m) hose for air/water, 300 psi (20.6 bar)	XD 50
	126364	1 in x 100 ft (25 mm x 30 m) hose for air/water, 300 psi (20.6 bar)	XD 50, XD 70

Oil Hoses

	Part Number	Description	Compatible Reel Series
	26C121	1/2 in x 35 ft (13 mm x 11 m) hose for oil, 2,000 psi (138 bar)	SD 10, XD 10
	26C122	1/2 in x 50 ft (13 mm x 15 m) hose for oil, 2,000 psi (138 bar)	SD 20, XD 20
	26C123	1/2 in x 75 ft (13 mm x 23 m) hose for oil, 2,000 psi (138 bar)	XD 30
	26C124	1/2 in x 100 ft (13 mm x 30 m) hose for oil, 2,000 psi (138 bar)	XD 40, XD 60
	126376	3/4 in x 75 ft (19 mm x 23 m) hose for oil, 1,500 psi (103 bar)	XD 40, XD 60
	126377	3/4 in x 100 ft (19 mm x 30 m) hose for oil, 1,500 psi (103 bar)	XD 40, XD 60
	126503	1 in x 50 ft (25 mm x 15 m) hose for oil, 1,275 psi (88 bar)	XD 40, XD 60
	126504	1 in x 75 ft (25 mm x 23 m) hose for oil, 1,275 psi (88 bar)	XD 50
	126505	1 in x 100 ft (25 mm x 30 m) hose for oil, 1,275 psi (88 bar)	XD 70, XD 80

Ordering Information

Grease Hoses

Part Number	Description	Compatible Reel Series
109158	1/4 in x 50 ft (6 mm x 15m) hose for grease, 5,000 psi (345 bar)	SD 10, XD 10
124470	3/8 in x 35 ft (10 mm x 11 m) hose for grease, 4,800 psi (331 bar)	SD 10, XD 10
124461	3/8 in x 50 ft (10 mm x 15 m) hose for grease, 4,800 psi (331 bar)	SD 20, XD 20
126076	3/8 in x 75 ft (10 mm x 23m) hose for grease, 5,000 psi (345 bar)	XD 30
16A674	1/2 in x 50 ft (13 mm x 15 m) hose for grease, 5,000 psi (345 bar)	XD 30

Waste Oil Evacuation Hoses

Part Number	Description	Compatible Reel Series
16A686	1 in x 30 ft (25 mm x 9 m) hose for waste oil or fuel, 125 psi (9 bar)	XD 30
126379	1 in x 50 ft (25 mm x 15 m) hose for waste oil, 250 psi (17 bar)	XD 40, XD 60
126380	1 1/4 in x 35 ft (32 mm x 10.5 m) hose for waste oil, 200 psi (13.8 bar)	XD 50
126688	1 1/4 in x 50 ft (32 mm x 15 m) hose for waste oil, 200 psi (13.8 bar)	XD 50
127173	1 1/2 in x 50 ft (38 mm x 15 m) hose for waste oil, 200 psi (13.8 bar)	XD 50

Diesel Fuel Hoses

Part Number	Description	Compatible Reel Series
16A686	1 in x 30 ft (25 mm x 9 m) hose for waste oil or fuel, 125 psi (9 bar)	XD 30
24R102	1 in x 50 ft (25 mm x 15 m) hose for diesel fuel, 250 psi (17 bar)	XD 40, XD 60
24R103	1 in x 75 ft (25 mm x 23 m) hose for diesel fuel, 250 psi (17 bar)	XD 50
24R106	1 in x 100 ft (25 mm x 30 m) hose for diesel fuel, 250 psi (17 bar)	XD 50, XD 70
24T252	1 in x 150 ft (25 mm x 46 m) hose for diesel fuel, 250 psi (17 bar)	XD 80
24R108	1 1/4 in x 35 ft (32 mm x 10.5 m) hose for diesel fuel, 250 psi (17 bar)	XD 50
24R110	1 1/4 in x 50 ft (32 mm x 15 m) hose for diesel fuel, 250 psi (17 bar)	XD 50
24R114	1 1/2 in x 50 ft (38 mm x 15 m) hose for diesel fuel, 150 psi (11 bar)	XD 50
24T253	1 1/2 in x 100 ft (38 mm x 30 m) hose for diesel fuel, 150 psi (11 bar)	XD 80
127167	2 in x 33 ft (51 mm x 10 m) hose for diesel fuel, 150 psi (11 bar)	XD 80
24T254	2 in x 50 ft (51 mm x 15 m) hose for diesel fuel, 150 psi (11 bar)	XD 80

Diesel Exhaust Fluid (DEF) Hoses

Part Number	Description	Compatible Reel Series
125242	3/4 in x 50 ft (19 mm x 15 m) hose for DEF fluid, 50 psi (3 bar)	XD 30

Pressure Wash Hoses

Part Number	Description	Compatible Reel Series
16A688	3/8 in x 75 ft (10 mm x 23m) hose for pressure wash, 4,000 psi (276 bar)	XD 30
126075	1/2 in x 50 ft (13 mm x 15 m) hose for pressure wash, 4,500 psi (310 bar)	XD 30

Notes

FLUID RECLAIM EQUIPMENT

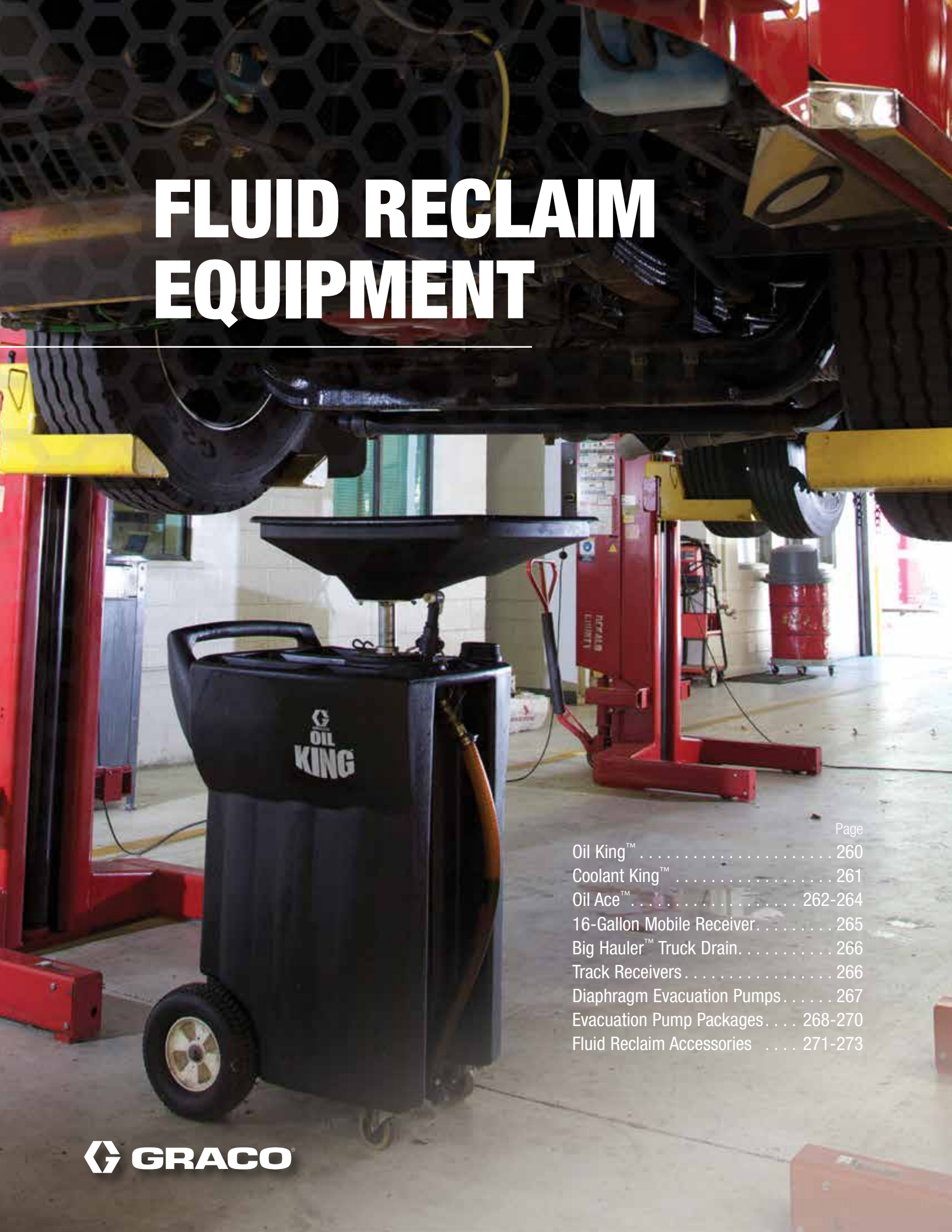

Page

Oil King™ 260
Coolant King™ 261
Oil Ace™ 262-264
16-Gallon Mobile Receiver 265
Big Hauler™ Truck Drain 266
Track Receivers 266
Diaphragm Evacuation Pumps 267
Evacuation Pump Packages 268-270
Fluid Reclaim Accessories 271-273

GRACO®

Convenient Used-Oil Receiver

Oil King is designed with the busy shop in mind. With oversized tires and push-pull handles it allows for smooth maneuvering. The large funnel can collect fluids from both a drain plug and a filter port at the same time.

5 Year Warranty!

Large Offset Collection Pan

This funnel can be raised to a maximum height of 72 in (183 cm) and is equipped with a filter screen to prevent debris from entering the tank.

Filter Drain Tray

Used filters are able to drain separately from the collection pan.

Convenient Tool Tray

Built-in holding bins for new or used filters, wrenches and rags all at your fingertips.

Liquid Sight Gauge

A full-length liquid level sight gauge lets you know when the tank is full.

Large 25-Gallon (94.6 l) Capacity Receiver

Made from a heavy-duty, durable UV stabilized polymer.
Dent-, rust- and corrosion-resistant.

Oversized Tires

Easily maneuver over hose and rough floors.

Two Evacuation Port Options

Choose from the gravity drain valve at the bottom or suction evacuation at the top.

Typical Applications

- Automotive dealerships
- Fast lube centers
- Service shops
- Heavy-duty dealerships
- Fleet services facilities

Typical Fluids Handled

- Used oil

Technical Specifications

Fluid	Used Oil
Fluid Capacity	25 gal (95 l)
Evacuation	Bottom – Gravity / Top – Suction
Receiver Material	Polyethylene
Length	24 in (60 cm)
Width	24 in (60 cm)
Height	45 to 72 in (1.1 to 1.8 m)
Funnel Size	22 x 24 in (50 x 56 cm)
Dry Weight	54 lb
Instruction Manual	308667

Ordering Information

Part Number	Description
238866	25 gal (95 l) used-oil receiver with used-filter tray, tool holders and sight gauge. Must use wall mount package (224873) for topside evacuation.

Must ship via truck.

5 Year Warranty!

Durable Receiver

Coolant King is designed with the busy shop in mind. With oversized tires and push-pull handles it allows for smooth maneuvering. The full-length sight gauge lets you know when the tank is full.

Large Offset Collection Pan

This funnel can be raised to a maximum height of 72 in (183 cm) and is equipped with a filter screen to prevent debris from entering the tank.

Convenient Tool Tray

Built-in holding bins for shop tools at your fingertips.

Liquid Sight Gauge

A full-length liquid-level sight gauge lets you know when the tank is full.

Large 25-Gallon (94.6 l) Capacity Receiver

Made from a heavy-duty, durable UV stabilized polymer. Dent-, rust- and corrosion-resistant. Color specific for easy fluid identification.

Oversized Tires

Easily maneuver over hose and rough floors.

Two Evacuation Port Options

Choose from the gravity drain valve at the bottom or suction-evacuation at the top.

Typical Applications

- Automotive dealerships
- Fast lube centers
- Service shops
- Heavy-duty dealerships
- Fleet services facilities

Typical Fluids Handled

- Used anti-freeze

Technical Specifications

Fluid	Anti-freeze
Fluid Capacity	25 gal (95 l)
Evacuation	Bottom – Gravity / Top – Suction
Receiver Material	Polyethylene
Length	24 in (60 cm)
Width	24 in (60 cm)
Height	45 to 72 in (1.1 to 1.8 m)
Funnel Size	22 x 24 in (50 x 56 cm)
Dry Weight	54 lb
Instruction Manual	308667

Ordering Information

Part Number	Description
248632	25 gal (95 l) used-anti-freeze receiver with used-filter tray, tool holders and sight gauge. Must use wall mount package (224873) for topside evacuation.

Must ship via truck.

Pressurized Oil Drain

Drain, evacuate and transfer used oil reliably, quickly and in the most cost-effective manner.

5 Year Warranty!

Large Offset Collection Pan

23 inch (58 cm) diameter offset collection bowl gives you a 31 inch (79 cm) total reach.

Superior Maneuverability

Wider and thicker handle for comfort.

Easy to Drain

Pressurize using shop air for easy oil evacuation.

Large 24-Gallon (90 l) Capacity Receiver

Perfect for small to large shops without an evacuation system.

Liquid Sight Gauge

Easy-to-read tank-level gauge lets you know when the tank is full.

Large Casters

Easily move around rough shop floors.

Typical Applications

- Automotive dealerships
- Fast lube centers
- Service shops
- Heavy-duty dealerships
- Fleet services facilities

Typical Fluids Handled

- Used oil

Technical Specifications

Fluid	Used oil
Fluid Capacity	24 gal (91 l)
Evacuation	Pressurized
Receiver Material	Steel
Length	24 in (60 cm)
Width	16 in (40.6 cm)
Height	56 to 80 in (143.5 to 203 cm)
Funnel Size	24 in (61 cm) diameter
Dry Weight	74 lb
Instruction Manual	310864

Ordering Information

Part Number	Description
119577	24 gal (90 l) steel-tank pressurized oil drain

Vacuum-Assisted Oil Collection System

Large-capacity collection systems make removing drain plugs a thing of the past. Oil Ace models with optional sight chamber offer the technician a visual indication of the waste fluid quantity. This technology reduces the threat of costly damages caused by over- or under-torquing or cross-threading drain plugs.

Large Offset Collection Pan

Wide offset collection bowl prevents splashing.

Vacuum Gauge

Ensure peak performance with easy-to-read vacuum gauge.

Sight Glass

Inspect oil quality via large, clear evacuation chamber and verify amount extracted.

Easy to Drain

Pressurize using shop air for easy oil evacuation.

Vacuum Probes

Variety of flexible suction attachments and adapters included.

Large 24 Gallon (90 l) Capacity Receiver

Perfect for small to large shops without an evacuation system.

Typical Applications

- Automotive dealerships
- Fast lube centers
- Service shops
- Heavy-duty dealerships
- Fleet services facilities

Typical Fluids Handled

- Used oil

Technical Specifications

Fluid	Used oil
Tank Capacity	24 gallon (90 l)
Evacuation	Pressurized
Receiver Material	Steel
Length	24 in (61 cm)
Width	16 in (40.6 cm)
Height	39 to 70.8 in (99 to 180 cm)
Funnel Size	23.8 in (60 cm)
Dry Weight	50.7 to 73.2 lbs (23 to 33.2 kg)
Instruction Manual	310864

Ordering Information

	Part Number	Description
	26C061	24 gal (90 l) steel tank with suction probes and adapters
	26C062	24 gal (90 l) steel tank with suction probes, adapters and sight glass
	26C063	24 gal (90 l) steel tank with suction probes, adapters and oil drain funnel
	26C064	24 gal (90 l) steel tank with suction probes, adapters, sight glass and oil drain funnel

16-Gallon Mobile Receiver

Typical Applications

- Automotive dealerships
- Fast lube centers
- Service shops
- Heavy-duty dealerships
- Fleet services facilities

Typical Fluids Handled

- Used oil

Technical Specifications

Fluid	Used oil
Fluid Capacity	16 gal (61 l)
Evacuation	Gravity
Receiver Material	Steel (239302 does not include drum)
Manual	306449
Length	26 in (66 cm)
Width	23 in (58 cm)
Height	42 to 70 in (107 to 177 cm)
Funnel Size	23 x 23 in (58 x 58 cm)
Dry Weight	40 lb (18 kg)

Ordering Information

Part Number	Description
239301*	16 gal (60 l) Oil receiver with steel drum oil receiver
239302	16 gal (60 l) Oil receiver without drum

*Use with evacuation kit 224873 or 24E166. 240832 can be ordered separately for existing diaphragm pump evacuation systems.

Accessories

Funnel Kit

Part Number	Description
243650	Use with 238866, 239301, 239302 and 248632. Includes tray and pipe.

Wall-Mounted Funnel Drain

Part Number	Description
154616	Use with Pedestal Receiver 225272 to open automatic check-valve and drain used oil through wall to waste tank. Drain has 1-1/4 NPT(F) outlet.

Drum-Mounted Funnel Drain

Part Number	Description
156789	Use with Pedestal Receiver 225272 to open automatic check-valve and drain used oil into standard drum. Funnel drain has 2 in NPT bung fitting for use with 55 gal (210 l) or 16 gal (60 l) drums or 275 gallon (1,100 l) tanks.

ATF Drain Funnel

Part Number	Description
208009	Use with Pedestal Receiver 225272 to extend funnel reach. Use for draining transmissions. Not equipped with drain plug. 16 in x 24-1/2 in.

Big Hauler™ Truck Drain

Oil/ Used Oil

Technical Specifications

Fluid	Used oil
Fluid Capacity	26 gal (98.4 l)
Evacuation	Gravity
Receiver Material	Steel
Length	42 in (106.7 cm)
Width	30 in (76.2 cm)
Height	9 to 11 in (22.9 to 27.9 cm)
Instruction Manual	309194

Typical Applications

- Truck maintenance facility
- Heavy-duty dealerships
- Fleet services facilities

Typical Fluids Handled

- Used oil

Ordering Information

Part Number	Description
244055*	Big Hauler truck drain specially designed for truck maintenance facilities

*Use with evacuation kit 224873 or 24E166. 240832 can be ordered separately for existing diaphragm pump evacuation systems.

Track Receivers

Oil/ Used Oil

Technical Specifications

Part Number	218969	235346
Fluid	Oil	Oil
Fluid Capacity	30 gal (113 l)	27 gal (102 l)
Evacuation	Gravity	Gravity
Receiver Material	Steel	Steel
Extension Range	37.5 to 46 in (0.95 to 1.17 m)	34.1 to 42.6 in (0.87 to 1.08 m)
Instruction Manual	307727	307727

Typical Applications

- Fast lube centers
- Fleet services facilities

Typical Fluids Handled

- Used oil

Ordering Information

Part Number	Description
218969	Specially designed for car and truck fast lube facilities where speed and mobility are important. Adjustable steel rollers fit track widths.
235346	Narrow rolling used-oil receiver, specially designed for car and truck fast lube facilities where speed and mobility are important. Adjustable steel rollers fit track widths. Same as 218969 except track width range.

Diaphragm Evacuation Pumps

Typical Applications

- Automotive dealerships
- Fast lube centers
- Service shops
- Heavy-duty dealerships
- Fleet services facilities

Typical Fluids Handled

- Used oil

Husky 1050

Husky 716

Technical Specifications

	Husky 716	Husky 1050
Maximum Fluid Working Pressure	100 psi (7.0 bar / 0.7 MPa)	100 psi (7.0 bar / 0.7 MPa)
Approximate Free Flow Rate @ 100 psi	16 gal/min (61 l/min)	50 gal/min (189 l/min)
Output per Cycle	0.04 gal (0.15 l)	0.17 gal (0.64 l)
Air Inlet	1/4 in	1/2 in
Fluid Inlet	3/4 in	1 in
Fluid Outlet	3/4 in	1 in
Maximum Pump Speed	400 cpm	275 cpm
Cycles per Gallon	25 cpg	5.9 cpg
Cycles per Liter	6.7 cpl	1.6 cpl
Wetted Parts	Buna-N, acetal, aluminum, stainless steel, PTFE, zinc-plated steel	Aluminum, TPC-ET, acetal, PTFE, Buna-N
Sound Pressure Level	85 dB(A)	96 dB(A)
Sound Power Level	95 dB(A)	90 dB(A)
Approximate Weight	8.5 lb (3.9 kg)	23 lb (10.5 kg)
Instruction Manual	308573	313597

Ordering Information

Part Number	Description
241906	Husky 716 Evacuation Pump
647731	Husky 1050 Evacuation Pump

Oil/ Used Oil

Ordering Information

Wall Mount Packages

Package Number	24E166	224873
Diaphragm Pump	1050A (1 in) UL-listed	716 (3/4 in)
Pump Part Number	647731	241906
Mounting Type	Wall Bracket	Wall Bracket
Mounting Part Number	24C637	224835
Fluid	Oil	Oil
Evacuation	Drum Adapter	Drum Adapter
Evacuation Part Number	240832	240832
Air Installation Kit	240684	240684
Fluid Installation Kit	240685	240685
Instruction Manual	313597	308719
Listings	UL, CE	–

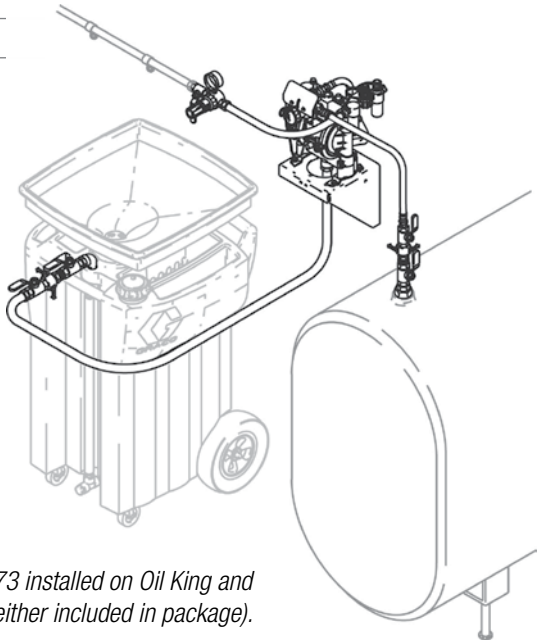

Package 224873 installed on Oil King and tank (neither included in package).

Ordering Information

Base Pump Packages

System evacuates lube from differential case using suction generated by a diaphragm pump. Nylon tubes ranging in size from 3/16 in OD to 1/2 in OD are included to fit through sight plug to completely drain the case. Evacuated gear lube is then pumped to waste tank. Piping and waste tank not included. Systems are fully groundable and bondable for safe transfer of used oil.

Package Number	224955	24E167	223695
Diaphragm Pump	716 (3/4 in)	1050A (1 in)	716 (3/4 in)
Pump Part Number	241906	647731	241906
Mounting Type	Base	Base	Base
Fluid	Gear Lube	Gear Lube	Gear Lube
Evacuation	Suction Wand	Suction Wand	Suction Wand
Evacuation Part Number	221146	221146	223696
Air Control Kit	110149	221147	–
Instruction Manual	308573	313597	308035 / 308573
Listings	CE	UL, CE	–
Notes	Order additional suction hose/ wand (221146) and additional control valve (220969) for each additional suction point. Order grounding clamp (222011) or use locally supplied grounding wires and clamps in accordance with applicable codes.	Order additional suction hose/ wand 221146 and additional control valve 220969 for each additional suction point. Order grounding clamp 222011 or use locally supplied grounding wires and clamps in accordance with applicable codes. See instruction manual 313597 for more information.	–

Ordering Information

Fas-Vac Mobile Packages

Package Number	224700	224701
Cart	224665	111470
Compatible Drum Size (Not included)	16 gal (60 l)	55 gal (200 l)
Pump	716 (3/4 in)	716 (3/4 in)
Pump Package	224667	224667
Fluid	Oil, Gear Lube	Oil, Gear Lube
Evacuation Kit	224669 / 224666	224702 / 224666
4-Way Valve	187359	187359
Port Size	1/2 NPT(F)	1/2 NPT(F)
Instruction Manual	308154	308154
Must be ordered separately (Not Included)		
Filter Regulator Lubricator (FRL)	110149	110149
FRL Mounting Kit	224759	224759

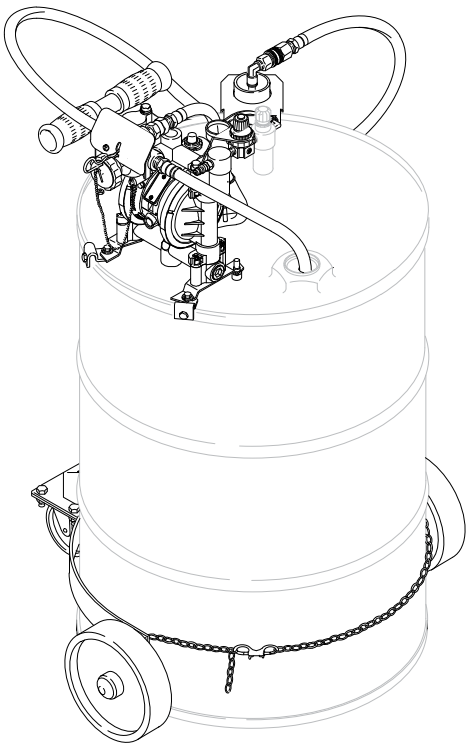

Package 224701 installed on oil drum (Drum and filter regulator not included in package)

Ordering Information

4-Way Evacuation Valve

Directional control valve used to simplify the filling and emptying of tanks

Features and Benefits

- Simplifies installation by eliminating need for multiple valves
- Unrestricted flow – no pressure or volume loss
- Two-position tank fill and emptying control
- Tapered, self-seating valve spool for superior sealing performance

Part Number	Description
120581	1 in NPT(F) 4-Way Evacuation Valve
120601	1-1/2 in NPT(F) 4-Way Evacuation Valve

Lube Truck/Holding Tank

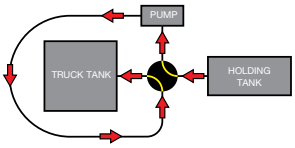

Lube Truck/Bulk Waste Tank

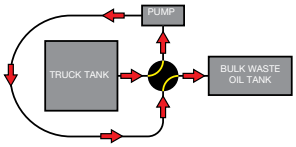

Air Regulators

Provides precision control of outlet air pressure. Feedback principle provides constant pressure to pump regardless of air demand rate and fluctuations in supply pressure. Additional fittings required (except air regulators with installation kits).

	Part Number	Description
	110318	1/4 NPT(FBE)
	110147	1/4 NPT(FBE) with gauge
	110234	3/8 NPT(FBE)
	109075	3/8 NPT(FBE) with gauge
	202858	3/8 NPT(M) x 1/2 NPSM(F) with gauge
	104266	1/2 NPT(FBE)
	244844	1/2 NPT(FBE) with gauge
	207755	3/4 NPT(FBE)
	244845	3/4 NPT(FBE) with gauge

Fluid Reclaim Accessories

Ordering Information

Air Filters and Drains

Centrifugal action 1/4, 3/8 and 1/2 NPT (with 20 micron filters); 3/4 NPT having 40 micron filters to remove water and foreign particles from air supply.

	Part Number	Description
	110146	1/4 NPT(FBE) Air Filter. Manual drain.
	106148	3/8 NPT(FBE) Air Filter. Auto-drain.
	106149	1/2 NPT(FBE) Air Filter. Manual drain.
	106150	3/4 NPT(FBE) Air Filter. Manual drain.
	106151	Automatic filter drain float-type, 1/4 NPT(M). Use with 106150, 112859 and 217074.
	127711	Automatic filter drain float-type. Use with 106148 and 106149. Sold in NA only.

Installation Kits

Installation kits include shut-off valve, regulators, gauges and fittings as necessary for normal installation.

	Part Number	Description
	218316	Installation kits for Fast-Flo, Fire-Ball or Husky 307, and 716 diaphragm pumps
	224512	Installation kits for Mini Fire-Ball 225 and Fire-Ball

Accessories Ordering Information

Additional Accessories

	Part Number	Description
	221146	10 ft (3.04 m) suction hose and quick coupler with four interchangeable 15 in (38.1 cm) suction wands. OD options: 3/16 in, 1/4 in, 3/8 in, 1/2 in. For use with Husky 716 or 1050 gear oil evacuation systems.
	223696	Four interchangeable 15 in (38.1 cm) suction wands. OD options: 3/16 in, 1/4 in, 3/8 in, 1/2 in. For use with part 223695 evacuation pump.
	224702	32 in suction wand. 1/2 in OD.
	224762	48 in (121.9 cm) suction wand kit with four interchangeable wands. OD options: 3/16 in, 1/4 in, 3/8 in, 1/2 in.
	224666	36 in suction wand storage kit
	218970	Tandem drain kit connects two rolling receivers for flow-through draining operation. Kit includes connector hose, shut-off valve, pipe nipple and quick-connect nipple. Instruction manual 307727.
	108491	Drain hose kit allows rolling used-oil receiver to be drained directly into the used-oil line. Kit is 24 in (0.6 m) in length with camlock coupler on one end.
	221007	Swing-Arm Drain Kit, used for servicing single rolling used-oil receiver (218969). When used with tandem drain kit (218970) it can service two receivers on a single track. Kit includes swivel elbow (108867), connector hose, dust cap (108203) and male adapter (108202).
	116229	Oil Tank Monitor. Shuts off air to the pump when tank is full.
	223888	6 ft (1.8 m) suction hose for ATF and anti-freeze. Includes filter screen. Use with 223695.
	222011	Grounding clamp for all used-oil handling systems. Includes 25 ft (7.6 m) grounding wire.
	187359	4-way valve 1/2 NPT(F) ports

Notes

ACCESSORIES

	Page
Air Regulators and Valves	276
Air Valves	277
Hose Fittings	278
Lubrication Hoses	279
Air/Water Hoses	280
Quick Connect Fittings	281
Adapters and Fittings	282-283

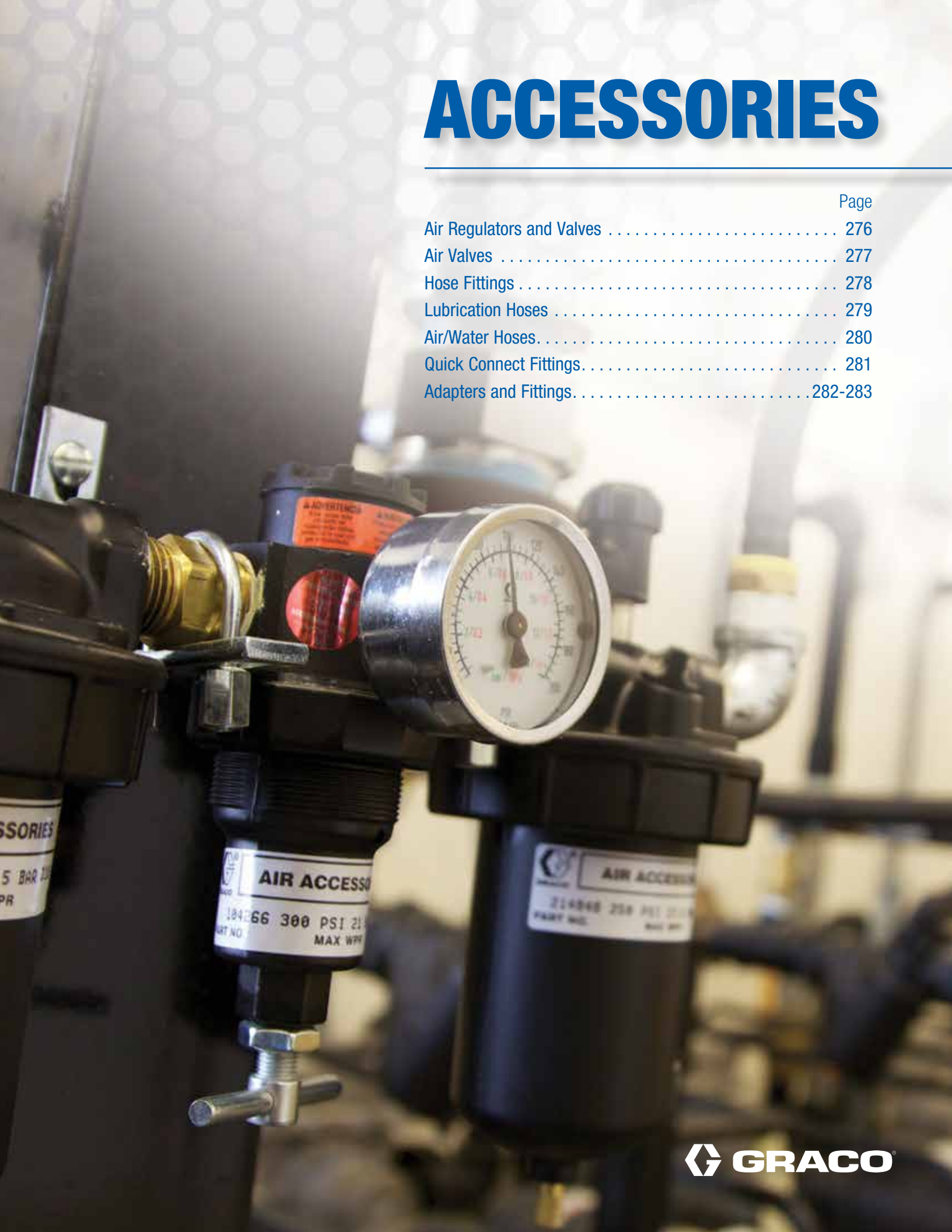

GRACO

Ordering Information

FRL Combination Units

Each includes filter, regulator, pressure gauge, lubricator and connection fittings.

Part Number	Inlet
110149	1/4 in NPT(FBE)
110150	3/8 in NPT(FBE)
217072	1/2 in NPT(FBE)
217073	3/4 in NPT(FBE)

Bleed-Type Air Shut-Off Valves

Closes air inlet to pump and relieves trapped air pressure down line from valve. Recommended for each pump drop line.
Note: Be certain to install correctly. If installed backwards air will constantly escape from the valve. Maximum pressure of 250 psi (17 bar).

Thread	1/4 in	3/8 in	1/2 in	3/4 in
NPT(FBE)	110223	110224	110225	110226
NPT(MXF) inlet x outlet	–	–	107142	107141

Ball Valve-Type Air Shut-Off Valve – Non-Pressure Relieving

Part Number	Inlet	Maximum Working Pressure
208390	1/4 in NPT(MBE)	500 psi
208393	3/8 in NPT(MBE)	500 psi
208630	1/2 in NPT(M) x 3/8 in NPT(F)	500 psi
109077	3/4 in NPT(FBE)	600 psi
118464	1 NPT(FBE)	600 psi

Ordering Information

Air Needle Valve

Controls pump speed by restricting air flow to pump or other air-operated equipment.

Part Number	Inlet	Outlet
205090	1/4 in NPSM(M)	1/4 in NPSM(F)
206264	1/4 in NPT(M)	1/8 in NPT(F)

Air Pressure Relief Valve

Prevents pump from operating beyond recommended working pressure by opening at a pre-set maximum air pressure.

Part Number	Maximum Pressure Rating	Thread
110065	60 psi (4 bar)	1/4 in NPT(M)
103347	100 psi (6.9 bar)	1/4 in NPT(M)

Air Pressure Gauge

Allows visual check of air pressure being supplied to the pump. Rated to 200 psi (14 bar)

Part Number	Inlet	Color
110319	1/8 in NPT(M)	Black
100960	1/4 in NPT(M)	Black
101180	1/4 in NPT(M)	Chrome

Air Manifold

Supply several pumps from one supply line. Larger port delivery ensures adequate air flow to all pumps.

Part Number	Inlet Ports	Inlet Thread	Outlet Thread	Maximum Pressure Rating
158990	2	1/2 in NPT(F)	3/8 in NPT(F)	5,000 psi

Runaway Valve

Prevents pump damage by automatically closing the air line to stop the pump when a runaway pump condition occurs due to an empty barrel or hose leak.

Part Number	Inlet
224040	3/4 in NPT(FBE)

Air Water

Ordering Information

Blow Guns

Safety Blow Gun tip swivels freely and cannot be removed. Tip pressure will not exceed 30 psi (2 bar), adequate for cleaning. Maximum working pressure 150 psi (10 bar). Use with coupler 208536.

	Part Number	Description	Inlet
	236211	Air blow gun	1/4 in NPT(F)

Tire Inflators

	Part Number	Description	Includes			
			12 in Hose	Swivel Dual-Foot Chuck	Straight-On Chuck	Pop-Out Gauge
	236205	Heavy-Duty Tire-Inflator	Yes	Yes	–	Yes
	236206	Passenger Car Tire Inflator	Yes	–	Yes	Yes
	218545	Tire Chuck with 1/4 in NPT(F) inlet	–	–	–	–

Water Valve

Water/Anti-Freeze Bib is a durable, full-volume dispense nozzle for water, anti-freeze and windshield washer fluid. Nitrile rubber seals.

	Part Number	Inlet	Pressure Rating
	180685	1/4 in NPT(F)	100 psi (7 bar)

Ordering Information

Heavy-Duty Reinforced Lubrication Hoses

For use with grease, oil and undercoating material. Hoses are black, male connections at both ends. Lubrication hoses listed are grounded for static electrical discharge.

ID Inch (mm)	Max PSI (bar)	Hose Length	Fitting		Part Number
			End 1 Thread NPT(M)	End 2 Thread NPT(M)	
1/4 (6.44)	5,000 (345)	12 in (0.3 m)	1/8	1/8	109145*
		15 in (0.4 m)			109148*
		24 in (0.6 m)	3/8	3/8	109146
		30 in (0.8 m)			109147
		48 in (1.2 m)	1/4	1/4	109149
		72 in (1.8 m)			109150
		12 ft (3.6 m)			109151
		15 ft (4.6 m)			109152
		20 ft (6.1 m)		3/8	109153
		25 ft (7.6 m)		1/4	109154
		35 ft (10.6 m)		3/8	109156
		40 ft (12.2 m)			109157
		50 ft (15.3 m)			109158
3/8 (9.5)	4,000 (276)	12 in (0.3 m)	1/4	1/2	109160
		24 in (0.62 m)	3/8	3/8	109161
		48 in (1.2 m)			109162
		72 in (1.8 m)			109163
		15 ft (4.6 m)	1/4	1/4	109165
		40 ft (12.2 m)		3/8	109169
		50 ft (15.3 m)			109170
1/2 (12.7)	3,000 (207)	15 in (0.4 m)	1/2	1/2	110069
		18 in (0.5 m)			220598
		54 in (1.4 m)			220600
		72 in (1.8 m)			220591
		10 ft (3.1 m)			220590
		16 ft (4.9 m)			220592
		20 ft (6.1 m)			220593
		25 ft (7.6 m)			220608
		40 ft (12.2 m)			221092
		50 ft (15.3 m)			221093
		75 ft (22.9 m)		3/4	237861
3/4 (19.1)	2,250 (155)	18 in (0.4 m)	3/4	3/4 (19.1)	109108
		72 in (1.8 m)			109105
		10 ft (3.0 m)			111010
		75 ft (22.9 m)	1/2	1	237865
		50 ft (15.2 m)			237866
1 (25.4)	212 (14.6)	50 ft (15.2 m)	1	1	241908
1 (25.4)	125 (8.7)	50 ft (15.2 m)	1	1	249058

Air Water

Ordering Information

Air/Water Hoses

For use with low pressure air and water. Hoses are male NPT at both ends.

ID Inch (mm)	Max PSI (bar)	Hose Length	Fitting		Part Number
			End 1 Thread NPT(M)	End 2 Thread NPT(M)	
Fabric-Reinforced 1/4 (6.44)	180 (12.4)	18 in (0.5 m)	1/4	1/4	109123
		4 ft (1.2 m)			109124
		6 ft (1.8 m)			109125
		10 ft (3.1 m)			109126
		25 ft (7.6 m)		1/2	109127
		40 ft (12.2 m)			109128
		40 ft (12.2 m)	3/8	1/4	218491
3/8 (9.5)	180 (12.4)	18 in (0.5 m)	3/8	3/8	204560
		4 ft (1.2 m)			109130
		6 ft (1.8 m)			203320
		10 ft (3.1 m)			109131
		16 ft (4.9 m)	1/4	3/8	110326
		25 ft (7.6 m)	3/8	1/2	109132
		40 ft (12.2 m)			109134
		60 ft (18.3 m)			109135
1/2 (12.7)	180 (12.4)	22 in (0.56 m)	1/2	1/2	218093
		4 ft (1.2 m)			110046
		6 ft (1.8 m)			205418
		10 ft (3.1 m)			214656
1/2 (12.7)	300 (20.7)	25 ft (7.6 m)	1/2	1/2	248312
		50 ft (15.2 m)			248313
3/4 (19.1)	180 (12.4)	18 in (0.5 m)	3/4	3/4	110047
		4 ft (1.2 m)			110048
		6 ft (1.8 m)			208610
		10 ft (3.1 m)			214955
		25 ft (7.6 m)			208611

Ordering Information

Quick-Connect Coupler

Permits quick, convenient attachment of air supply hoses.

Part Number	Inlet	Body Size
208536	1/4 in NPT(F)	1/4 in
110198	3/8 in NPT(F)	1/4 in
110199	1/2 in NPT(F)	3/8 in
110200	3/4 in NPT(F)	1/2 in

Quick-Connect Nipple

Allows quick attachment of air supply hoses to pump motor.

Part Number	Inlet	Body Size
169967	1/4 in NPT(F)	1/4 in
169970	1/4 in NPT(M)	1/4 in
169971	3/8 in NPT(M)	1/4 in
110196	1/2 in NPT(M)	3/8 in
110197	3/4 in NPT(M)	1/2 in

Oil | Gear Lube | Grease | Air | Water

Ordering Information

Bushings and Pipe Adapters – Reducing, Standard and Expanding

Outlet	Inlet					
	1/8 in NPT	1/4 in NPT	3/8 in NPT	1/2 in NPT	3/4 in NPT	1 in NPT
1/8 in NPT	150171	159840	156580	–	–	–
1/4 in NPT	100030	–	150287	159842	–	–
3/8 in NPT	–	159841	150286	156022	–	–
1/2 in NPT	–	100206	100081	–	168595	–
3/4 in NPT	–	100615	100505	100896	–	–
1 in NPT	–	–	–	100380	158586	–

Street Elbows

Part Number	Inlet/Outlet
100840	1/4 in NPT
155699	3/8 in NPT
158683	1/2 in NPT
176393	3/4 in NPT

Coupling – Standard

Part Number	Inlet
100451	1/8 in NPT
113093	1/4 in NPT
162024	3/8 in NPT
158581	1/2 in NPT
100385	3/4 in NPT
100474	1 in NPT

Hex Nipples – Standard and Reducing

Male End 2	Male End 1				
	1/4 in NPT	3/8 in NPT	1/2 in NPT	3/4 in NPT	1 in NPT
1/8 in NPT	151519	156296	159239	–	–
1/4 in NPT	156971	165198	162449	–	–
3/8 in NPT	–	156849	–	194048	–
1/2 in NPT	–	–	158491	157191	–
3/4 in NPT	–	–	–	175013	158555

Ordering Information

Square Head Plug

Part Number	Inlet
111697	1/4 in NPT
100040	3/8 in NPT
100737	1/2 in NPT
104663	3/4 in NPT

Swivel Adapters*

Rigid End	Swivel End	Straight Swivel Adapter (m x f)	Straight Swivel Adapter (f x f)	90° Swivel Adapter (f x f)	90° Swivel (m x f)	45° Swivel Adapter (m x f)
1/8 in	1/4 in	208434	–	–	–	–
1/4 in	1/4 in	156823	155570	157676	155541	–
	3/8 in	157705	–	–	–	–
3/8 in	1/4 in	–	159153	–	155495	–
	3/8 in	155665	156173	155677	155494	161889
	1/2 in	162505	–	159801	217430	–
1/2 in	1/4 in	–	155653	–	–	–
	3/8 in	158256-257	161077	–	161037	–
	1/2 in	156684	155865	157416	155470	–
3/4 in	3/4 in	157785	156172	156589	160327	105281
1 in	3/4 in	202965	–	–	–	–
	1 in	160022	158383	–	–	–

*Not a "live" swivel, position is stationary after tightened.

Tube Fittings

Maximum pressure rating of 3000 psi (207 bar) with appropriate tubing wall thickness.

	Description	Inlet	Tube OD	
			5/8 in	7/8 in
	Tube Union Flow 90° Elbow	–	101012	101376
	Straight Tube Union	–	101009	101340
	Male Connector	3/4 in NPT	–	101339
	Straight Female Connector	1/2 in NPT	101008	–
	Tube Tee with Female Branch	5/8 in NPT	101013	–

Standard Graco Warranty

1-Year Warranty Policy

Graco warrants all equipment manufactured by Graco and bearing its name to be free from defects in material and workmanship on the date of sale by an authorized Graco distributor to the original purchaser for use. With the exception of any special, extended or limited warranty published by Graco, Graco will, for a period of twelve (12) months from the date of sale, repair or replace any part of the equipment determined by Graco to be defective.

This warranty applies only when the equipment is installed, operated and maintained in accordance with Graco's written recommendations. This warranty does not cover, and Graco shall not be liable for, general wear and tear, or any malfunction, damage or wear caused by faulty installation, misapplication, abrasion, corrosion, inadequate or improper maintenance, negligence, accident, tampering or substitution of non-Graco component parts. Nor shall Graco be liable for malfunction, damage or wear caused by the incompatibility of Graco equipment with structures, accessories, equipment or materials not supplied by Graco, or the improper design, manufacture, installation, operation or maintenance of structures, accessories, equipment or materials not supplied by Graco.

This warranty is conditioned upon the prepaid return of the equipment claimed to be defective to an authorized Graco distributor for verification of the claimed defect. If the claimed defect is verified, Graco will repair or replace free of charge any defective parts. The equipment will be returned to the original purchaser, transportation prepaid. If inspection of the equipment does not disclose any defect in material or workmanship, repairs will be made at a reasonable charge, which may include the costs of parts, labor and transportation.

THIS WARRANTY IS EXCLUSIVE AND IS IN LIEU OF ANY OTHER WARRANTIES, EXPRESS OR IMPLIED, INCLUDING BUT NOT LIMITED TO WARRANTY OF MERCHANTABILITY OR WARRANTY OF FITNESS FOR A PARTICULAR PURPOSE.

Graco's sole obligation and buyer's sole remedy for any breach of warranty shall be as set forth above. The buyer agrees that no other remedy (including but not limited to incidental or consequential damages for lost profits, lost sales, injury to person or property, or any other incidental or consequential loss) shall be available. Any action for breach of warranty must be brought within two (2) years of the date of sale.

Graco makes no warranty, and disclaims all implied warranties of merchantability and fitness for a particular purpose in connection with accessories, equipment, materials or components sold but not manufactured by Graco. These items sold but not manufactured by Graco (such as electric motors, switches, hoses, etc.) are subject to the warranty, if any, of their manufacturer. Graco will provide purchaser with reasonable assistance in making any claim for breach of these warranties.

In no event will Graco be liable for indirect, incidental, special or consequential damages resulting from Graco supplying equipment hereunder, or the furnishing, performance or use of any products or other goods sold hereto, whether due to a breach of contract, breach of warranty, the negligence of Graco or otherwise.

Graco Petroleum Management Group Equipment Extended Warranty

Graco warrants all equipment referenced in this document that is manufactured by Graco and bearing its name to be free from defects in material and workmanship on the date of sale to the distributor. Graco will, for a period as defined in the table on the opposite page from the date of sale, repair or replace equipment covered by this warranty and determined by Graco to be defective. This warranty applies only when the equipment is installed, operated and maintained in accordance with Graco's written recommendations.

This warranty does not cover, and Graco shall not be liable for, general wear and tear, or any malfunction, damage or wear caused by faulty installation, misapplication, abrasion, corrosion, inadequate or improper maintenance, negligence, accident, tampering or substitution of non-Graco component parts. Nor shall Graco be liable for malfunction, damage or wear caused by the incompatibility of Graco equipment with structures, accessories, equipment or materials not supplied by Graco, or the improper design, manufacture, installation, operation or maintenance of structures, accessories, equipment or materials not supplied by Graco.

This warranty is conditioned upon the prepaid return of the equipment claimed to be defective to an authorized Graco distributor for verification of the claimed defect. If the claimed defect is verified, Graco will repair or replace free of charge any defective parts. The equipment will be returned to the original purchaser, transportation prepaid. If inspection of the equipment does not disclose any defect in material or workmanship, repairs will be made at a reasonable charge, which may include the costs of parts, labor and transportation.

THIS WARRANTY IS EXCLUSIVE AND IS IN LIEU OF ANY OTHER WARRANTIES, EXPRESS OR IMPLIED, INCLUDING BUT NOT LIMITED TO WARRANTY OF MERCHANTABILITY OR WARRANTY OF FITNESS FOR A PARTICULAR PURPOSE.

Graco's sole obligation and buyer's sole remedy for any breach of warranty shall be as set forth above. The buyer agrees that no other remedy (including but not limited to incidental or consequential damages for lost profits, lost sales, injury to person or property, or any other incidental or consequential loss) shall be available. Any action for breach of warranty must be brought within one (1) year post the warranty period.

GRACO MAKES NO WARRANTY, AND DISCLAIMS ALL IMPLIED WARRANTIES OF MERCHANTABILITY AND FITNESS FOR A PARTICULAR PURPOSE, IN CONNECTION WITH ANY ACCESSORIES, EQUIPMENT, MATERIALS OR COMPONENTS SOLD BUT NOT MANUFACTURED BY GRACO.

These items sold but not manufactured by Graco (such as electric motors, switches, etc.) are subject to the warranty, if any, of their manufacturer. Graco will provide purchaser with reasonable assistance in making any claim for breach of these warranties.

In no event will Graco be liable for indirect, incidental, special or consequential damages resulting from Graco supplying equipment hereunder, or the furnishing, performance or use of any products or other goods sold hereto, whether due to a breach of contract, breach of warranty, the negligence of Graco or otherwise.

FOR GRACO CANADA CUSTOMERS

The parties acknowledge that they have required that the present document, as well as all documents, notices and legal proceedings entered into, given or instituted pursuant hereto or relating directly or indirectly hereto, be drawn up in English.

Les parties reconnaissent avoir convenu que la rédaction du présente document sera en Anglais, ainsi que tous documents, avis et procédures judiciaries exécutés, donnés ou intentés à la suite de ou en rapport, directement ou indirectement, avec les procedures concernées.

Graco Petroleum Management Group Equipment Extended Warranty (cont.)

		Warranty Period
	Oil King, Coolant King, and Oil Ace	5 Years
	Pulse Fluid Management Hubs, TLMs, PACs and Extenders	2 Years
REELS	**Cord and Light Reels**	2 Years
REELS	Electrical Components	1 Year
REELS	**LD Series Hose Reels**	5 Years
REELS	Wear Parts, including but not limited to hose, seals, swivel seats and roller guides	1 Year
REELS	**SD Series Hose Reels**	7 Years
REELS	Power Springs	3 Years
REELS	Wear Parts, including but not limited to hose, seals, swivel seats and roller guides	1 Year
REELS	**XD Series Hose Reels**	7 Years
REELS	Power Springs	3 Years
REELS	Wear Parts, including but not limited to hose, seals, swivel seats, roller guides and motors	1 Year
METERS	**Mechanical Meters**	5 years
METERS	Wear parts, including but not limited to o-rings, seals and valves	1 Year
METERS	**LD Preset Meters**	5 years
METERS	Electronics	2 Years
METERS	Wear parts, including but not limited to o-rings, seals and valves	1 Year
METERS	**SD Meters and Valves**	5 Years
METERS	Electronics	3 Years
METERS	Wear parts, including but not limited to o-rings, seals and valves	1 Year
METERS	**EM Meters and Valves / Pulse Meters and Valves**	5 Years
METERS	Electronics	3 Years
METERS	Wear parts, including but not limited to o-rings, seals, valves and trigger locks	1 Year
PUMPS	**LD Oil/Grease Pumps**	5 Years
PUMPS	Wear Parts, including but not limited to o-rings, packings and seals	1 Year
PUMPS	Hoses with pump packages	1 Year
PUMPS	**AODD Pumps**	5 Years
PUMPS	Wear Parts, including but not limited to o-rings, packings and seals	1 Year
PUMPS	Hoses with pump packages	1 Year
PUMPS	**Mini Fire-Ball 225 and Fire-Ball 300 Oil and Grease Pumps**	7 Years
PUMPS	Wear Parts, including but not limited to o-rings, packings and seals	1 Year
PUMPS	Hoses with pump packages	1 Year
PUMPS	**Fire-Ball 425 Oil and Grease Pumps**	10 Years
PUMPS	Wear Parts, including but not limited to o-rings, packings and seals	1 Year
PUMPS	Hoses with pump packages	1 Year
PUMPS	**Fast-Ball and Fast-Flo Oil Pumps**	5 Years
PUMPS	**LD Blue and SD Blue Diesel Exhaust Fluid Pumps**	2 Years

Index

Part No.	Page No.
15C502	49, 65
15M308	15, 25
15T366	15, 25, 93
15T367	15, 25, 93
15T368	15, 25, 93
15T369	15, 25, 93
15T370	15, 25, 93
15Y478	231
16A674	257
16A684	256
16A686	257
16A688	257
16A707	256
16F769	138
16F781	138
16F784	138
16F878	19, 25, 31, 33, 34, 40, 41, 46
16F885	31, 35, 36, 42, 43, 46
16F886	31, 32, 33, 39, 46
16G760	170
16N883	227
16P999	227
17C270	50
17C907	178, 179
17C908	178, 179
17F878	18
17F885	18
17R220	15, 24, 92, 101
17S659	15, 25, 87, 90, 93, 223, 233, 238, 244, 256
17S660	15, 25, 87, 90, 93, 223, 233, 238, 244, 256
17S661	15, 25, 87, 90, 93, 223, 233, 238, 244, 256
17S662	15, 25, 87, 90, 93, 223, 233, 238, 244, 256
17S663	15, 25, 87, 90, 93, 223, 233, 238, 244, 256
17T207	15, 24, 90, 92
24A217	221, 222, 226
24A218	222
24A219	232
24A220	232
24A221	232
24A222	232
24A224	233
24A934	222, 226
24A935	222, 226
24A936	222, 226
24A937	222, 226
24A938	222, 226
24A939	222, 226
24A940	222, 226
24A941	222, 226
24A942	222, 226
24A943	222, 226
24A944	222, 226
24A945	222
24A946	222
24A947	222
24A948	222
24A949	222
24A950	222, 226, 233
24A951	222, 233
24B624	194
24B632	194
24B634	194
24B639	194
24B768	194
24C100	223
24C245	231
24C246	231
24C247	231
24C248	231
24C249	231
24C250	231
24C251	231
24C252	231
24C253	231
24C254	231
24C255	231
24C256	231
24C443	216
24C444	215, 216
24C537	215, 216
24C538	37, 44, 215, 216
24C539	215, 216
24C637	192, 194, 268
24C772	37, 44, 215
24D132	232, 237
24D133	232, 237
24D147	192
24D205	193
24D590	71
24D591	71
24D592	75
24D593	75
24D594	71
24D595	75
24D596	71
24D597	71
24D598	75
24D599	75
24D600	71
24D601	75
24D602	71
24D603	71
24D604	75
24D605	75
24D606	71
24D607	71
24D608	75
24D989	221
24D990	221
24D991	221
24D992	221
24D993	221
24D994	221
24D995	221
24D996	221
24D997	221
24D998	221
24D999	221
24E001	221
24E002	221
24E006	145
24E007	145
24E008	145
24E009	145
24E010	145
24E011	145
24E166	265, 266, 268
24E167	269
24E283	236, 237
24E284	236, 237
24E285	236, 237, 238
24E780	146
24E781	146
24E782	146
24E823	238
24E824	238
24F205	51
24F206	51
24F524	176
24F529	167, 168, 173
24F531	167
24F532	167, 168, 177
24F679	168, 175
24F737	215
24F738	215
24F739	215
24F740	215
24F741	215
24F742	215
24F743	215
24F755	215
24F756	215
24F757	215
24F758	215
24F759	215
24F760	215
24F761	215
24F773	215
24F774	215
24F775	215
24F776	215
24F777	215
24F778	215
24F779	215
24F870	167, 175
24F878	167
24F901	112, 116, 119, 124, 138
24F902	113, 114, 116, 120, 125, 126, 138
24F903	114, 116, 120, 126, 138
24F904	46, 112, 116
24F905	46, 113, 114, 116
24F906	46, 114, 116
24F910	34, 41, 47
24F914	35, 36, 42, 43, 47
24F915	19, 25, 32, 39, 46, 114, 116
24F918	31, 47, 49
24F920	35, 42, 47
24F930	35, 36, 42, 43, 47
24F931	35, 42, 47
24F932	35, 42, 47
24F935	34, 41, 46
24F947	168
24G576	19, 25, 31, 33, 34, 35, 37, 38
24G579	31, 34
24G582	31, 32, 39
24G585	31, 36
24G588	31, 40, 41, 42, 43, 44, 45
24G591	31, 41
24G594	31
24G597	31
24G600	111, 112
24G603	111, 113
24G606	111, 114
24G636	169
24G738	96, 167, 170
24G745	166, 167, 168
24G862	114
24G865	215
24G866	215
24H193	223, 227
24H292	170
24H293	168, 170
24H420	19, 25, 34, 35, 36, 37, 38, 39, 41, 42, 43, 44, 45, 46, 112, 113, 114, 116
24H422	113, 116
24H606	116
24H655	216
24H656	216
24H657	215, 216
24H658	215, 216
24H659	215, 216
24H660	215, 216
24H661	215, 216
24H662	32, 35, 37, 39, 42, 44, 215, 216
24H663	113, 114, 215, 216
24H666	34, 41, 46
24H669	35, 42, 46
24H689	34
24H695	34
24H702	35
24H704	35
24H726	35
24H728	35
24H751	32
24H753	32
24H775	32
24H777	32
24H799	34
24H800	34
24H801	34
24H802	34
24H836	41
24H842	41
24H858	116
24H859	34, 41, 46
24H862	112, 113, 114, 116
24H865	19, 25, 32, 33, 39, 40, 46, 116

Index

Part No.	Page No.
24H868	42
24H870	42
24H892	42
24H894	42
24H915	39
24H916	39
24H917	39
24H918	39
24H940	39
24H941	39
24H942	39
24H943	39
24H964	41
24H965	41
24H966	41
24H967	41
24J030	112
24J036	113
24J042	114
24J048	113
24J054	114
24J060	113
24J066	114
24J487	116
24J495	32, 35, 36, 38, 39, 43, 45
24J501	113, 114, 116
24J733	37
24J734	37
24J735	44
24J736	44
24J776	37
24J777	44
24K285	36, 47
24K777	38
24K796	45
24K797	38
24K798	45
24K799	38
24K800	45
24K834	38
24K835	45
24K836	37
24K837	44
24K838	36
24K839	43
24K842	36
24K843	43
24K860	194
24K901	194
24K932	194
24K937	194
24M499	168
24N323	232
24N324	232
24N325	232
24N326	232
24N327	232
24N328	232
24N331	233
24N332	233
24N333	233
24N334	233
24N335	233
24N336	233
24N337	233
24N339	233
24N340	233
24N341	233
24N342	233
24N343	233
24N444	223, 227
24N674	226
24N675	226
24N682	226
24N683	226
24N684	226
24N685	226
24N686	227
24N690	226
24N691	226
24N814	227
24P164	227
24P313	242
24P315	242
24P316	242
24P317	242
24P318	242
24P319	242
24P320	242
24P322	242
24P323	242
24P324	242
24P325	242
24P326	242
24P327	242
24P328	242
24P329	242
24P330	242
24P331	242
24P332	242
24P333	242
24P334	242
24P335	242
24P336	242
24P337	242
24P338	242
24P339	242
24P340	242
24P341	242
24P342	242
24P343	242
24P344	242
24P345	242
24P346	242
24P347	242
24P348	242
24P349	242
24P350	242
24P351	242
24P352	242
24P353	242
24P354	242
24P355	242
24P356	242
24P455	243
24P456	243
24P457	243
24P458	243
24P459	243
24P460	243
24P461	243
24P462	243
24P463	243
24P464	243
24P465	243
24P466	243
24P467	243
24P468	243
24P469	243
24P470	243
24P471	243
24P472	243
24P473	243
24P474	243
24P475	243
24P476	243
24P477	243
24P478	243
24P479	243
24P480	243
24P481	243
24P482	243
24P483	243
24P484	243
24P485	243
24P486	243
24P487	243
24P488	243
24P489	243
24P490	243
24P491	243
24P492	243
24P493	243
24P494	243
24P495	243
24P496	243
24P497	243
24P498	243
24P499	243
24P623	116
24P880	227
24P881	227
24P914	233
24P984	242
24P985	242
24P986	242
24P987	243
24P988	243
24P989	243
24R060	244, 255
24R061	244, 255
24R072	244, 255
24R074	244
24R076	244
24R077	244
24R102	250, 257
24R103	251, 257
24R106	251, 257
24R108	257
24R110	252, 257
24R111	242, 243, 244, 250, 251, 255
24R112	242, 244, 250, 255
24R114	252, 257
24R115	242, 243, 244, 250, 251, 255
24R117	243, 244, 252, 255
24R118	252
24R350	50, 54, 65, 119, 120, 124, 125, 126, 137, 146
24R404	250
24R405	250
24R406	250
24R407	250
24R408	250
24R409	250
24R410	250
24R412	250
24R413	250
24R414	250
24R415	250
24R416	250
24R419	250
24R420	250
24R421	250
24R422	250
24R423	250
24R424	250
24R425	250
24R426	250
24R427	250
24R428	250
24R429	250
24R430	250
24R431	250
24R432	250
24R433	250
24R434	250
24R435	250
24R436	250
24R437	251
24R438	251
24R439	251
24R440	251
24R441	251
24R442	251
24R443	251
24R444	251
24R445	251
24R446	251

Index

Part No.	Page No.
24R447	251
24R448	251
24R449	251
24R450	251
24R451	251
24R452	251
24R453	251
24R454	251
24R455	251
24R456	251
24R457	251
24R458	251
24R459	251
24R460	251
24R461	251
24R462	251
24R463	251
24R464	251
24R465	251
24R466	251
24R503	252
24R504	252
24R505	252
24R506	252
24R507	252
24R508	252
24R509	252
24R510	252
24R511	252
24R512	252
24R513	252
24R515	252
24R516	252
24R517	252
24R518	252
24R519	251
24R520	251
24R521	251
24R522	251
24R523	251
24R524	251
24R525	251
24R526	251
24R527	251
24R528	251
24R529	251
24R530	251
24R531	251
24R532	251
24R533	251
24R534	251
24R535	251
24R536	251
24R537	251
24R538	251
24R539	251
24R540	251
24R541	251
24R542	251
24R543	251
24R544	251
24R545	251
24R546	251
24R547	251
24R548	251
24R549	252
24R550	252
24R551	252
24R552	252
24R553	252
24R554	252
24R555	252
24R556	252
24R557	252
24R558	252
24R559	252
24R560	252
24R561	252
24R562	252
24R563	252
24R564	252
24R565	252
24R566	252
24R567	252
24R568	252
24R569	252
24R570	252
24R571	252
24R572	252
24R573	252
24R574	252
24R575	252
24R576	252
24R577	252
24R578	252
24R854	242
24R855	242
24R856	242
24R857	242
24R859	242
24R860	242
24R861	242
24R862	242
24R863	242
24T011	252
24T012	252
24T013	252
24T014	252
24T015	252
24T016	252
24T017	252
24T018	252
24T019	252
24T020	252
24T021	252
24T022	252
24T023	252
24T024	252
24T025	252
24T104	253
24T105	253
24T106	253
24T107	253
24T108	253
24T109	253
24T110	253
24T111	253
24T112	253
24T113	253
24T114	253
24T115	253
24T116	253
24T117	253
24T118	253
24T119	253
24T120	253
24T121	253
24T122	253
24T123	253
24T124	253
24T125	253
24T126	253
24T127	253
24T128	253
24T129	253
24T130	253
24T131	253
24T132	253
24T133	253
24T252	251, 257
24T253	252, 257
24T254	252, 257
24T327	255
24T328	255
24T329	255
24T330	255
24T331	255
24T332	255
24T333	255
24T334	255
24T335	255
24T336	255
24T337	255
24T875	254
24T876	254
24T886	253
24T888	253
24T889	253
24T891	253
24T892	253
24T910	253
24T911	253
24U227	201
24U228	201
24U947	98
24U950	98
24U953	98
24U956	98
24U959	98
24V034	51, 98
24V037	98
24V040	98
24V043	98
24V046	98
24V049	98
24V052	99
24V055	99
24V058	99
24V641	165
24V644	165
24V645	165
24V646	165
24V656	165
24V677	167
24V678	167
24V686	168
24W140	179
24W141	179
24W142	179
24W143	179
24W144	179
24W145	179
24W148	168, 175
24W149	167, 175
24W154	168, 175
24W161	165, 167, 175
24W185	168
24W186	167
24W190	175
24W250	174, 236, 238
24W251	174, 238
24W306	99
24W337	141
24W498	141
24W515	201
24W641	99
24Y859	225
24Y861	225
24Y862	225
24Y863	225
24Y864	225
24Y865	225
24Y866	225
24Y868	225
24Y869	225
24Y870	225
24Y871	225
24Y872	225
24Y880	225
24Y882	225
24Y883	225
24Y884	225
24Y886	225
24Y887	225
24Z125	99
24Z126	99
24Z127	99

Index

Part No.	Page No.
24Z128	99
24Z129	99
24Z130	99
24Z131	99
24Z132	99
24Z133	99
24Z257	19, 25
24Z676	17
24Z677	17
24Z728	17, 19
24Z978	12, 19
25A857	194
25A874	194
25C548	113
25C549	112
25C550	33
25C551	33
25C552	33
25C553	33
25C554	40
25C555	40
25C556	40
25C557	40
25C841	95
25C903	32, 33, 35, 37, 51, 89
25C904	32, 37, 39, 45, 89
25C905	89
25C915	89
25C916	89
25C918	89
25C919	89
25D116	141
25D121	19, 25
25D130	19, 25
25D433	89
25D436	89
25D437	89
25D625	19
25D906	15, 25
25D934	90
25D936	90
25M317	15, 19, 25
25M318	15
25M319	15, 19, 25
25M320	15
25M323	15
25M324	15
25M326	15, 19, 25
25M328	15
25M329	15
25M330	15
25M404	55, 92, 221
25M405	92
25M406	92, 221
25M407	92
25M410	92
25M411	92
25M413	50, 54, 92
25M415	92
25M416	92
25M417	92
25M449	16, 19
25N415	19
25R975	13
25R976	13
25R977	13
25R978	13
25R979	13
25R980	13
25R981	13
26A140	242
26A141	242
26A142	242
26A143	243
26A144	243
26C061	264
26C062	264
26C063	264
26C064	264
26C121	256
26C122	256
26C123	256
26C124	256
26C169	112
26C170	113
26C171	114
26C172	164
26C173	164
26C174	164
26C175	164
26C183	125
26C184	125, 136, 154
26C185	125
26C186	125
26C267	15, 24, 90
26C268	15, 24, 90
26C354	24, 92
26C355	24, 92
26C356	24, 92
26C357	24, 92
26C358	24, 92
26C360	24, 92
26C361	24, 92
26C384	24, 55, 92
26C385	24, 92
26C399	25
26C401	22
26C409	25
100030	282
100040	283
100054	158, 159
100081	282
100206	126, 282
100220	64
100380	282
100385	282
100451	282
100474	282
100505	282
100615	282
100737	283
100833	158, 159
100834	158
100835	158
100837	159
100840	282
100846	158, 159
100847	158, 159
100848	158
100854	159
100896	90, 282
100960	59, 60, 63, 123, 131, 132, 133, 197, 277
100961	63
100962	63
100970	158, 159
100971	158
101008	283
101009	283
101012	283
101013	283
101078	63, 66
101180	277
101277	158
101281	158
101283	158
101287	159
101297	159
101312	159
101339	283
101340	283
101376	283
101496	67, 204
101604	159
101605	159
102527	68
103347	277
103538	201
104266	59, 60, 63, 131, 133, 271
104655	204
104663	283
104815	204
105281	283
105474	26
106148	55, 63, 112, 113, 114, 193, 272
106149	63, 193, 201, 205, 272
106150	193, 201, 272
106151	272
107141	276
107142	201, 276
108190	191
108202	273
108203	273
108458	26, 63, 65, 96
108491	273
108537	59, 63, 65
108867	273
109067	136
109075	50, 51, 54, 55, 56, 63, 119, 120, 124, 125, 126, 127, 128, 132, 133, 136, 271
109077	276
109105	66, 67, 192, 204, 279
109108	66, 204, 279
109123	204, 280
109124	280
109125	62, 191, 192, 204, 280
109126	280
109127	280
109128	280
109130	280
109131	280
109132	280
109134	280
109135	280
109145	136, 154, 156, 157, 279
109146	279
109147	279
109148	139, 154, 157, 279
109149	279
109150	120, 126, 127, 128, 136, 279
109151	119, 120, 124, 125, 136, 279
109152	279
109153	279
109154	125, 279
109156	279
109157	279
109158	257, 279
109160	279
109161	279
109162	279
109163	68, 131, 132, 133, 134, 135, 136, 279
109165	123, 136, 279
109167	123
109169	279
109170	279
110025	26
110046	280
110047	280
110048	71, 75, 280
110065	277
110069	279
110127	68
110146	63, 191, 193, 272
110147	63, 167, 168, 192, 193, 271
110148	63
110149	63, 269, 270, 276
110150	63, 276
110196	193, 281
110197	193, 281
110198	123, 136, 281
110199	193, 281
110200	193, 281
110201	156
110202	156
110203	156
110216	156
110218	156
110223	63, 64, 136, 167, 168, 192, 193, 276

Index

Part No.	Page No.
110224	63, 64, 128, 136, 193, 276
110225	59, 63, 64, 135, 136, 192, 193, 276
110226	64, 136, 193, 276
110234	123, 136, 197, 271
110236	104
110237	104
110285	104
110314	65
110318	191, 271
110319	277
110326	280
110702	158
110703	159
110705	159
110706	159
110709	159
110710	159
110711	159
110712	159
110713	159
110877	66
110878	66
110906	66
110907	66
111010	279
111470	64, 139, 270
111620	26
111697	283
112119	194
112174	68
112196	156
112197	151
112198	151
112255	156, 157
112859	272
113053	68
113093	282
113497	194
113859	26
114017	87
114558	119, 120, 124, 125, 136, 204
114829	81
115042	71, 75, 145, 146, 192
116229	273
116306	167, 168, 176
118464	276
119577	262
120581	271
120601	271
124398	173
124461	257
124470	257
124541	175
124548	177
124549	177
124550	177
124581	167, 174, 175, 238
124603	167, 175
124671	168, 175
124875	168, 174, 175, 238
124963	167, 168, 176
124964	170
124965	170
125014	177
125074	175
125078	165, 168, 173
125079	168, 175
125242	175, 257
125478	169
125479	169
126075	257
126076	257
126359	250, 256
126360	250, 256
126361	250, 256
126362	250, 256
126363	251, 256
126364	251, 256
126375	250
126376	250, 256
126377	250, 256
126379	250, 257
126380	252, 257
126503	250, 256
126504	251, 256
126505	251, 256
126688	252, 257
127167	252, 257
127173	252, 257
127214	254
127217	254
127218	254
127219	254
127220	254
127221	254
127222	254
127223	254
127224	254
127225	254
127271	254
127634	178, 179
127635	178, 179
127637	178, 179
127639	178, 179
127640	178
127642	163, 164, 165
127643	163, 164, 165
127646	175
127647	169
127649	165, 167, 168, 172
127650	172
127651	172
127652	172
127654	172
127655	164, 173
127656	164, 165, 176
127657	176
127663	165, 167, 168, 171
127679	164
127680	164
127711	55, 272
127720	176
127793	178, 179
127794	178, 179
127795	178, 179
127796	178, 179
127800	171
127804	176
127805	176
127806	176
127815	176
127823	176
127873	164
127875	169
129581	112, 113, 114, 115
129591	112, 113, 114, 115
129645	33, 40, 46, 116, 139
129876	90
130783	25
131183	46, 112, 116, 139
131184	33, 40, 46, 113, 116, 139
131226	15, 25, 93
131380	141
131394	141
131462	15
131733	24, 90, 92, 99
150171	282
150286	282
150287	221, 282
150622	157
151519	282
154616	265
155332	15, 25
155470	66, 131, 132, 133, 134, 135, 136, 283
155494	64, 66, 68, 120, 126, 127, 128, 131, 132, 133, 134, 135, 136, 283
155495	283
155541	120, 126, 127, 128, 136, 204, 283
155570	199, 283
155653	283
155665	283
155677	283
155699	282
155836	157
155865	283
156022	282
156172	283
156173	283
156296	282
156580	282
156589	283
156684	46, 283
156789	265
156823	116, 283
156849	55, 123, 136, 282
156859	131, 132
156971	126, 282
157191	282
157416	55, 283
157676	283
157705	46, 112, 113, 114, 283
157785	283
158256	283
158383	283
158491	282
158555	282
158581	282
158586	282
158683	282
158990	277
159153	283
159239	282
159801	283
159840	282
159841	282
159842	221, 282
160022	46, 283
160327	66, 204, 283
160754	65, 77, 79, 137, 141
161037	283
161077	283
161889	283
162024	282
162449	282
162505	283
165198	113, 282
168085	68
168595	282
169967	281
169969	204
169970	113, 193, 281
169971	119, 120, 123, 124, 125, 136, 281
171818	68
172405	64
175013	282
176393	282
176684	64
180199	66
180685	221, 278
180698	233, 238, 244, 255
183241	138
183243	138
186463	138
186472	26
187359	270, 273
187754	64
188845	67, 204
190125	191
191075	64, 68
191126	68
191128	68
191130	68
191131	68
191287	87
191288	87
191289	87
191294	87

Index

Part No.	Page No.
191295	87
194048	282
194347	193
196220	131, 132
196471	104
200020	158
200021	158
200325	154, 157, 158
200326	50, 54, 59, 65, 77, 79, 120, 123, 126, 131, 132, 137, 141, 146, 148, 197, 205
200389	139, 153, 154, 155, 157, 158
201881	158
202577	119, 120, 123, 124, 125, 136, 139, 154, 199
202579	155, 157
202600	155
202650	158
202654	159
202858	193, 271
202869	138
202965	283
203156	64
203198	157
203320	66, 120, 126, 127, 128, 136, 280
203497	157, 158
203504	157, 158
203521	222, 226
203522	222, 226
203523	222, 226
203524	222, 226
203525	222, 226
203526	222, 226
203597	157
203622	50, 54, 67, 80, 120, 125, 139
203650	64, 80, 119, 120, 124, 125, 139
203664	124
203688	50, 54, 59, 63, 67
203697	151, 156
203701	151
203702	151
203703	151
203857	53, 54, 56, 58
203872	53, 54, 56, 58
203876	53, 54, 55
203976	124, 125
203987	63, 68, 77
203992	64
204072	157
204076	67
204082	157
204083	157
204084	157
204095	56, 60
204121	126
204130	138
204134	119, 124
204144	67, 197
204204	157
204254	53, 54, 56, 58
204264	56
204351	124
204353	126
204385	65, 131, 132, 137
204461	126, 131, 132
204467	126
204560	66, 280
204574	77, 79, 80, 123, 125, 131, 132, 137, 141, 146, 148, 197, 205
204741	222, 226, 232
204867	80
204897	157
204929	158
205054	67
205090	277
205102	131
205337	138
205339	126, 131, 132
205394	130, 131, 133
205395	130, 131, 133, 134, 135
205418	66, 131, 132, 133, 134, 135, 136, 192, 280
205528	126, 131, 132
205532	158
205554	158
205568	158
205582	158
205592	158
205626	58, 59
205699	131, 132
206197	201
206199	193
206264	277
206405	122, 123, 197
206496	199
206502	199
206655	56
206656	60
206699	122, 123, 197
206700	122, 123, 197
207361	56, 60, 127, 133, 148
207366	127, 133, 148
207367	56, 60
207561	65, 137
207562	65, 137
207579	68
207651	193
207755	201, 271
207946	157
207947	157
207948	157
208009	265
208390	276
208393	276
208434	283
208536	193, 278, 281
208610	145, 146, 280
208611	280
208630	276
210880	64
210881	204
214570	199
214583	204
214656	280
214658	80
214847	63
214848	63, 201, 205
214849	201
214926	157
214955	280
215407	26
215474	26
215475	26
215481	26
215487	26
217072	59, 63, 276
217073	276
217074	272
217359	204
217430	283
218093	66, 280
218115	62
218316	62, 204, 272
218334	201
218340	222, 232, 237
218341	222, 232, 237
218491	280
218545	221, 278
218549	37, 44, 51, 55, 219, 220, 221, 222, 230, 231, 232, 236, 237, 238
218550	219, 220, 222, 230, 231, 232
218588	26
218742	71
218903	66
218969	266, 273
218970	273
220107	105
220112	105
220170	123
220171	123
220590	279
220591	64, 66, 279
220592	279
220593	279
220596	191
220598	55, 66, 279
220600	279
220608	279
220653	119, 124, 138
220654	119, 125, 127, 138
220969	269
221007	273
221092	279
221093	279
221146	269, 273
221147	269
222011	193, 201, 269, 273
222051	62
222058	65, 77, 79, 123, 197
222059	119, 124, 137
222060	56, 125, 127, 133, 148
222061	56, 125, 127, 133, 148
222062	50, 51, 63, 66
222063	50, 54, 55, 56, 63, 66
222065	58, 59, 60
222066	59, 60, 63, 66
222067	60
222068	59, 63, 66
222069	124
222070	124, 125, 136
222071	127
222072	120, 126, 127, 128, 136
222073	126, 127
222074	126
222075	133
222076	131, 132, 133, 134, 135, 136
222077	197
222078	123
222079	197
222080	123, 136
222081	123, 136
222082	197
222086	56
222087	53, 54, 58
222095	58, 59, 60
222103	62
222104	62
222118	63, 204
222119	63, 204
222225	222, 232, 237
222243	64, 125, 139
222245	125
222308	51, 54, 55, 62, 63, 64, 130
222383	125, 136
222602	62
222629	104
222645	104
222902	150
222916	193
223107	133
223108	131
223179	26, 96
223187	158
223344	131, 132, 133, 138
223448	104
223695	269, 273
223696	269, 273
223700	138, 141, 148
223701	138, 141, 148
223845	127, 138
223846	131, 132, 133, 138
223888	191, 273
224022	198
224023	198
224040	67, 277
224266	134
224417	222, 232
224444	233, 238
224458	199
224459	199

Index

Part No.	Page No.
224469	199
224512	50, 54, 272
224534	55
224541	55
224579	56, 60, 67
224665	270
224666	270, 273
224667	270
224700	270
224701	270
224702	270, 273
224741	76, 77
224742	76, 77
224751	147, 148
224752	147, 148
224759	270
224762	273
224825	198
224826	198
224835	191, 192, 194, 268
224872	139, 154
224873	260, 261, 265, 266, 268
224912	147, 148
224915	148
224916	148
224955	269
225006	125
225014	126
225016	126
225026	125
225094	54
225272	265
225376	80
225378	80
225380	80
225384	80
225640	54
225642	54
225728	54
225773	124
225781	131
225782	59
225786	59
225827	124
225844	151
225852	54
225853	59
225880	80
225914	151
225931	54
226012	124
226013	126
226018	131
226269	197
226289	81
226290	81
226342	197
226940	203
226941	203
226942	203
226943	203
226944	203
226945	203
226947	203
226948	203
226951	203
226952	203
226953	203
233807	124, 125, 153
233933	153
234237	197, 199
235346	266
235457	198
235998	63, 68
236054	63, 67, 192, 193, 204
236058	119, 120, 136
236171	158
236205	278
236206	278
236211	278
236273	194
236753	76, 77
236754	78, 79
236763	26
236764	26
236778	68, 77, 79
236864	77, 79, 148, 150
237075	50, 54, 64
237129	203
237130	203
237131	203
237132	203
237133	203
237134	203
237161	191
237211	193
237526	58, 59
237601	63, 68
237653	76, 77
237861	279
237865	279
237866	279
237872	222, 232, 237
237873	232, 237, 244, 255
237874	232, 237, 244, 255
237893	26, 55, 63, 68
237904	77
237932	244
238108	58, 59
238125	64
238245	59, 63, 68
238246	63, 66
238247	66
238370	64, 68
238371	86
238428	192, 194
238429	65
238431	65
238432	65
238433	65
238434	65
238436	199
238438	199
238440	199
238592	68
238593	68
238595	68
238596	68
238866	260, 265
238887	86
238899	194
238909	193
238996	26
239019	26
239301	265
239302	265
239663	199
239702	62
239703	62
239705	80
239706	105
239707	80
239729	130, 132, 133
239730	130, 132, 133, 134, 135
239731	130
239824	94
239829	86
239876	94
239877	122, 124
239887	122, 125, 126, 127, 128
239888	122, 126, 127, 128
239949	86
239950	86
239951	86
239952	194
239965	136
239966	136, 199
240416	87
240417	26, 63, 65
240429	63, 68
240453	87
240684	268
240685	268
240718	65
240832	265, 266, 268
241056	60
241057	60
241246	138
241633	55
241657	194
241663	65, 137
241906	182, 187, 192, 194, 267, 268, 269
241908	279
242055	139, 154
242056	119, 120, 123, 124, 125, 136, 139, 154
242057	139, 154
242058	139, 154
243161	199
243650	265
243669	182, 186, 192, 194
243817	133
243835	87
243836	87
243837	87
244038	55
244055	266
244342	26
244628	59
244635	132, 135
244636	132, 135
244637	132
244644	128
244645	128
244657	145, 146
244679	192
244680	192
244681	192
244682	192
244844	134, 135, 136, 192, 271
244845	271
244846	59
244847	59
244905	134
244906	134, 135
245694	124
245695	124
245696	125
245697	125
246775	49, 50, 51
246780	118, 120
246781	118, 120
246903	50
246904	50
246906	50
246907	50
246909	118, 119
246910	119
246911	119
246913	119
246914	120
246916	120
246917	120
246946	193
247335	134
247337	134
247355	134
247443	147, 148
247450	147, 148, 149
247453	96
247540	147
247712	101
247713	101
247714	101
247715	101
247716	101
247717	101
247718	103

Index

Part No.	Page No.
247721	103
247722	103
247723	103
247724	103
247725	103
247759	87
247760	87
247888	71
247889	71
247890	75
247891	75
247892	71
247893	71
247894	75
247895	75
247969	71
247973	145
247974	145
247975	145
247976	145
247977	145
247978	145
247979	146
247980	146
247981	146
248097	49, 50, 51
248230	50
248296	68
248312	280
248313	280
248324	68
248622	51
248623	51
248632	261, 265
249058	279
249440	19, 104
249615	120
253848	256
253849	256
253850	256
253852	256
253853	256
255143	71, 75
255277	32, 34, 39, 41, 86
255349	64
255460	101
255461	15, 101
255470	15, 24, 90, 92, 101
255793	90, 103
255852	15, 24, 92, 98, 99
255853	15, 24, 92, 98, 99
255854	15, 24, 90, 92, 98, 99
255855	90, 99
255856	90
255857	15, 24, 92, 101
255858	15, 24, 92, 101
255859	103
255885	93
255921	103
256164	99, 101
256215	34, 38, 39, 40, 41, 42, 44, 45, 51
256216	32, 33, 34, 35, 36, 37, 38, 39, 40, 41, 42, 43, 44, 45, 86
256719	19, 25
257350	87
257351	87
257435	134
257539	19
258693	36, 41, 43, 44
258694	86
260061	208
260100	206, 207
260101	206, 207
260102	206, 207
260104	206, 207
260105	207
260106	207
260108	207
260109	207
260110	208
260111	208
260112	208
260113	208
260114	208
260124	209
260125	209
260145	209
260238	209
260300	209
260306	209
260406	210
260407	210
286211	198
286517	197, 199
286621	198
512874	128, 135, 137
514150	26
647016	182, 184, 192, 194
647648	182, 184, 194
647731	182, 184, 194, 267, 268, 269
652002	182, 190, 194
948392	135, 137
948393	128, 137
965124	130
965129	130
CM155N	146
CM17BN	146
CM2L5N	146
CM2RBN	146
CM515N	146
CM53BN	146
D0B005	194
D0B020	194
D0B500	194
D0B525	194
D0F005	194
D0F020	194
D0F500	194
D0F525	194
D03005	194
D03050	194
D03200	194
D03255	194
D05007	194
D05070	194
D05200	194
D05277	194
D31255	182, 185, 191, 194
DB3525	182, 188, 194
DF3525	182, 189, 194
HNH55#	231
HNHB7#	237
HNHC5#	237
HNHCD#	237
HNHFF#	237
HNL56#	231
HNL65#	231
HNLC8#	237
HNLD5#	237
HNLE3#	237
HNM65#	231
HNMC8#	237
HNMD5#	237
HNMDD#	237
HNPB8#	237
HNPC5#	237
HPH1D#	220
HPH5D#	220
HPH5H#	219
HPH15#	219
HPH23#	219
HPH55#	219
HPL2D#	220
HPL5J#	219
HPL6D#	220
HPL6H#	219
HPL23#	219
HPL23B	221
HPL25#	219
HPL25B	221
HPL33#	219
HPL33B	221
HPL56#	219
HPL65#	219
HPM3B#	220
HPM6D#	220
HPM6H#	219
HPM33#	219
HPM33B	38, 45, 51, 55, 221
HPM65#	219
HPM65B	36, 37, 38, 43, 44, 45, 51, 55
HSDD5#	236
HSDD5A	174
HSDD5B	174
HSDD5F	174
HSDDD#	236
HSDDDA	174
HSDDDB	174
HSDDDF	174
HSH1D#	230
HSH5D#	230
HSH15#	230
HSH55#	230
HSHB7#	236
HSHC5#	236
HSHCD#	236
HSHFF#	236
HSL2D#	230
HSL6D#	230
HSL25#	230
HSL33#	230
HSL56#	230
HSL65#	230
HSLC8#	236
HSLD5#	236
HSLE3#	236
HSM3B#	230
HSM6D#	230
HSM33#	230
HSM65#	230
HSM65B	236
HSMC8#	236
HSMCF#	236
HSMD5#	236
HSMDD#	236
HSPB8#	236
HSPC5#	236
P14DCS	145
P14MCS	145
P26DCS	145
P26MCS	145
P29DCS	145
P29MCS	145
P55DCS	145
P55MCS	145
P63DCS	145
P63MCS	145
P68DCS	145
P68MCS	145

AMERICAS

MINNESOTA
Worldwide Headquarters
Graco Inc.
88-11th Avenue N.E.
Minneapolis, MN 55413

MAILING ADDRESS
P.O. Box 1441
Minneapolis, MN 55440-1441
Tel: 800-275-5574 Fax: 612-623-6777

EUROPE

BELGIUM
Graco BVBA
Industrieterrein-Oude Bunders
Slakweidestraat 31
B-3630 Maasmechelen,
Belgium
Tel: 32 89 770 700 Fax: 32 89 770 777

ASIA PACIFIC

AUSTRALIA
Graco Australia Pty Ltd.
Suite 17, 2 Enterprise Drive
Bundoora, Victoria 3083
Australia
Tel: 61 3 9468 8500 Fax: 61 3 9468 8599

CHINA
Graco Fluid Equipment (Shanghai) Co., Ltd.
Building 7, No.1-2
Wenshui Road 299,
Jing'an District
Shanghai 200436
P.R.China
Tel: 86 21 649 50088 Fax: 86 21 649 50077

INDIA
Graco Hong Kong Ltd.
India Liaison Office
Room 443, Level 4
Augusta Point, Golf Course Road
Gurgaon, Haryana, India 122001
Tel: 91 124 435 4208 Fax: 91 124 435 4001

JAPAN
Graco K.K.
1-27-12 Hayabuchi
Tsuzuki-ku
Yokohama City, Japan 2240025
Tel: 81 45 593 7300 Fax: 81 45 593 7301

KOREA
Graco Korea Inc.
Shinhan Bank Building
4th Floor #1599
Gwanyang-Dong, Dongan-Ku,
Anyang-si, Korea 431-060
Tel: 82 31 476 9400 Fax: 82 31 476 9801

©2020 Graco Inc. 303245 Rev. AH 8/20 All other brand names or marks are used for identification purposes and are trademarks of their respective owners. All written and visual data contained in this document are based on the latest product information available at the time of publication. Graco reserves the right to make changes at any time without notice. For more information on Graco's intellectual property, see www.graco.com/patent or www.graco.com/trademarks.

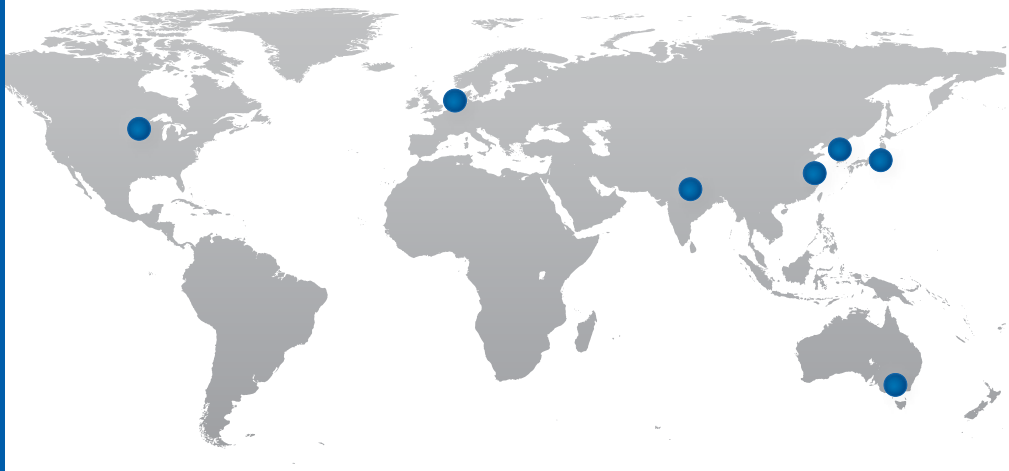

Graco's got you covered

Facilities Worldwide for Global Support

Quality First

At Graco, we pride ourselves on providing best-in-class products. Engineered solutions are manufactured in our own facilities, with the highest standards in the industry. We provide you with world-class customer support and expertise to help solve your lubrication challenges.

Global Reach

Graco has facilities across the globe to provide you with the products and service *you* need, where *you* live. Plus, Graco has dedicated field experts in all areas of the world to support the products we sell.

Product Capabilities

Graco has a broad range of products to provide solutions that meet your needs. Our products are engineered and tested to perform in the harshest environments so you can be certain your equipment is protected and working at peak performance.

Contact us today!

Call **800-533-9655** to speak with a Graco representative, or visit **www.graco.com** for more information.

GRACO