Cutting Rings

D 9

Tightening Nut

M 10

Male Tapered / JIC Stud

GE-NPT 11
JIC 12

Male Tapered Stud

BSPT 13
GE-Metric 15

Male Parallel Stud Elastomer Seal

GE-BSPP 14
Metric 16

Male Parallel Stud O-Ring Seal

GE-UN-O 17

Male Parallel Stud Female Nut

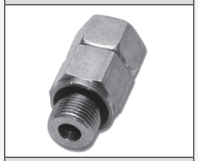

EVGE-BSPP 25
Metric 25

Straight Tube Coupling

G equal 17
GV reducing 18

Straight Equal Female Coupling

EDKO 19

Female Stud Coupling

GAI-BSPP 31

Male-Female Adaptor

KOR 26-27

Weld Nipple Male

AS 21

Weld Nipple Female (Nut excluded)

SKA 22

Reducing Coupling BSPP

RI 23

Socket Head Plugs Elastomer Seal

VSTI Metric 28
VSTIR BSPP 28

Blanking Plug Metric

ROV 30

Blanking Cap Metric (Nut excluded)

BUZ 29

Bulkhead Coupling Straight

SV 20

Bulkhead Coupling Elbow

WSV 40

Male Stud Elbow

WE-NPT 36
BSPT 37
Metric Taper 38

Adjustable Female Elbow

EVW 43

Banjo Coupling

DSVW BSPP 41
Metric 42

Male Elbow Coupling

W 39

Adjustable Barrel Tee

EVL 47

Adjustable Branch Tee

EVT 46

Equal Tee Coupling

T 48

Equal Cross Coupling

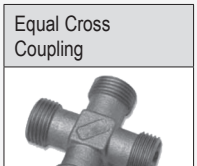

K 49

Gauge Coupling Male

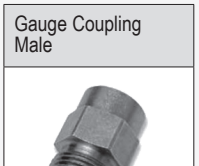

MAV 32

Gauge Coupling Female

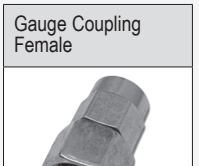

MAVE 32

Non Return Valve

NRV 33

Elastomeric Seal

ED/ED-V 34

Adjustable Elbow 45°

EVF 43

See page E 29 for an explanation of the Pirtek Product Code nomenclature

Click on Description, Code Pre-fix or Page No. to Display that Page

PIRTEK

This page is part of a complete catalogue containing technical and safety data.
All data must be reviewed when selecting a product.
Pirtek reserve the right to change technical specifications without notice

Standards

Pirtek metric compression fittings are manufactured by Cast S.p.A. to ISO 8434-1 / DIN 2353 Standards.

Two cutting rings are available for use with the fittings, both of which incorporate double cutting edges, but only one of which incorporates additional elastomeric seals to enhance sealing performance in adverse conditions (DB4 ring at right).

Approvals

All components are manufctured in a Quality Assured environment, and carry the following approvals:

DVGW Certificate No. NG-4502AU0117

Det Norske Veritas (DNV) Certificate No. P-10963

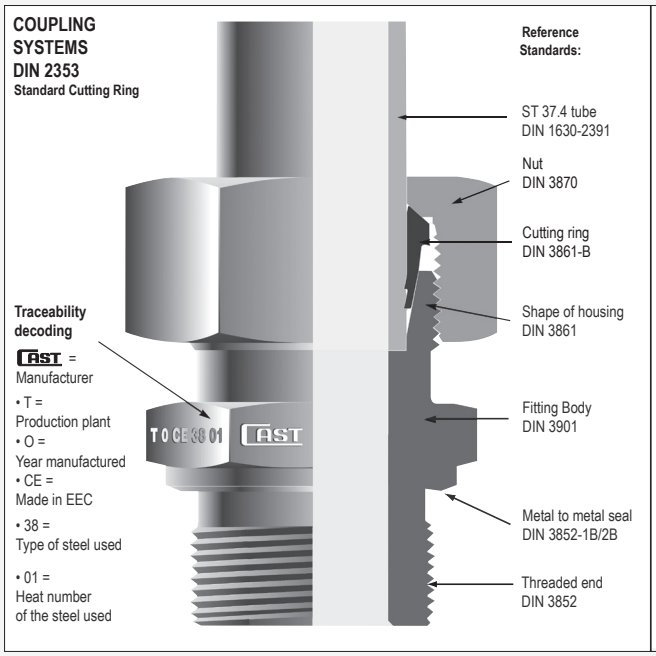

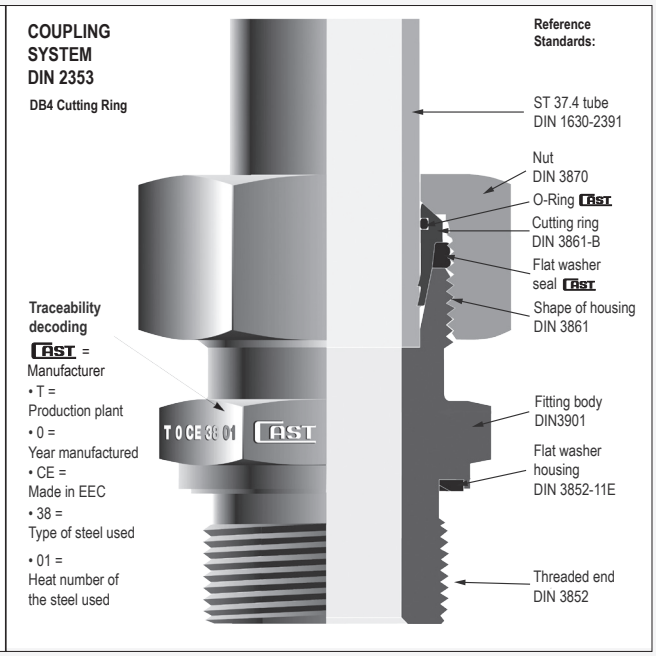

Materials

Carbon steel fittings are manufactured from steels with the following compositions:

Component	Material specification				Reference
Ring / sleeve	CF9SMnPb36	CF9SMnPb28	CF9SMnPb36	CF9SMnPb28	UNI 4838
	11SMnPb37	11SMnPb30	11SMnPb37	11SMnPb30	EN10087
Nut	CF9SMnPb36	CF9SMnPb28	CF9SMnPb36	CF9SMnPb28	UNI 4838
	11SMnPb37	11SMnPb30	11SMnPb37	11SMnPb30	EN10087
Straight body	CF9SMnPb36	CF9SMnPb28	CF9SMnPb36	CF9SMnPb28	UNI 4838
	11SMnPb37	11SMnPb30	11SMnPb37	11SMnPb30	EN10087
Forged body	CF9SMnPb36	CF9SMnPb28	CF9SMnPb36	CF9SMnPb28	UNI 4838
	11SMnPb37	11SMnPb30	11SMnPb37	11SMnPb30	EN10087

Working Temperatures

Carbon steel -20° C to +120° C as per ISO 8434

O Rings

All O Rings are supplied as NBR (Nitrile) with the properties:

Temp. range -35° C to +100° C

Hardness 80-90 Shore

Viton seals are recommended for higher temperatures. Please contact Pirtek for assistance. Viton properties:

Temp. range -25° C to +200° C

Hardness 80-90 Shore

Storage

All fittings incorporating O Rings should be stored in accordance with the provisions of DIN 7716 to avoid problems induced by deterioration of the O Ring

Surface Treatment

Steel fittings are zinc plated to UNI ISO 2081 and 4520

Plating thickness 8 - 12 microns

400 hours resistance to saline fog as per UNI ISO 9227

Anti seize compound

An anti-seize compound with nickel base is recommended for use when tightening compression fittings. The compound should meet the specifications of Mil. A 907 D (USA)

Support Sleeves

Fittings being assembled on thin-walled tubes require the use of support sleeves. Consult the metric tube table on page E 7 for affected sizes

Safety Factors

The nominal working pressures tabulated for the fittings indicate the maximum working pressures including pressure peaks. Higher working pressures should only be contemplated after consultation with Pirtek for specific applications.

The safety factor is 4:1 in the case of static load at a temperature as per DIN 3861 (24° cone). The 4:1 safety factor applies also to parallel threaded port connections with elastomeric seal. Tapered stud fittings or parallel threaded studs with metal to metal sealing faces have only a 2.5:1 safety factor

Tightening Torques

Refer to the tables following

PIRTEK

**This page is part of a complete catalogue containing technical and safety data.
All data must be reviewed when selecting a product.
Pirtek reserve the right to change technical specifications without notice**

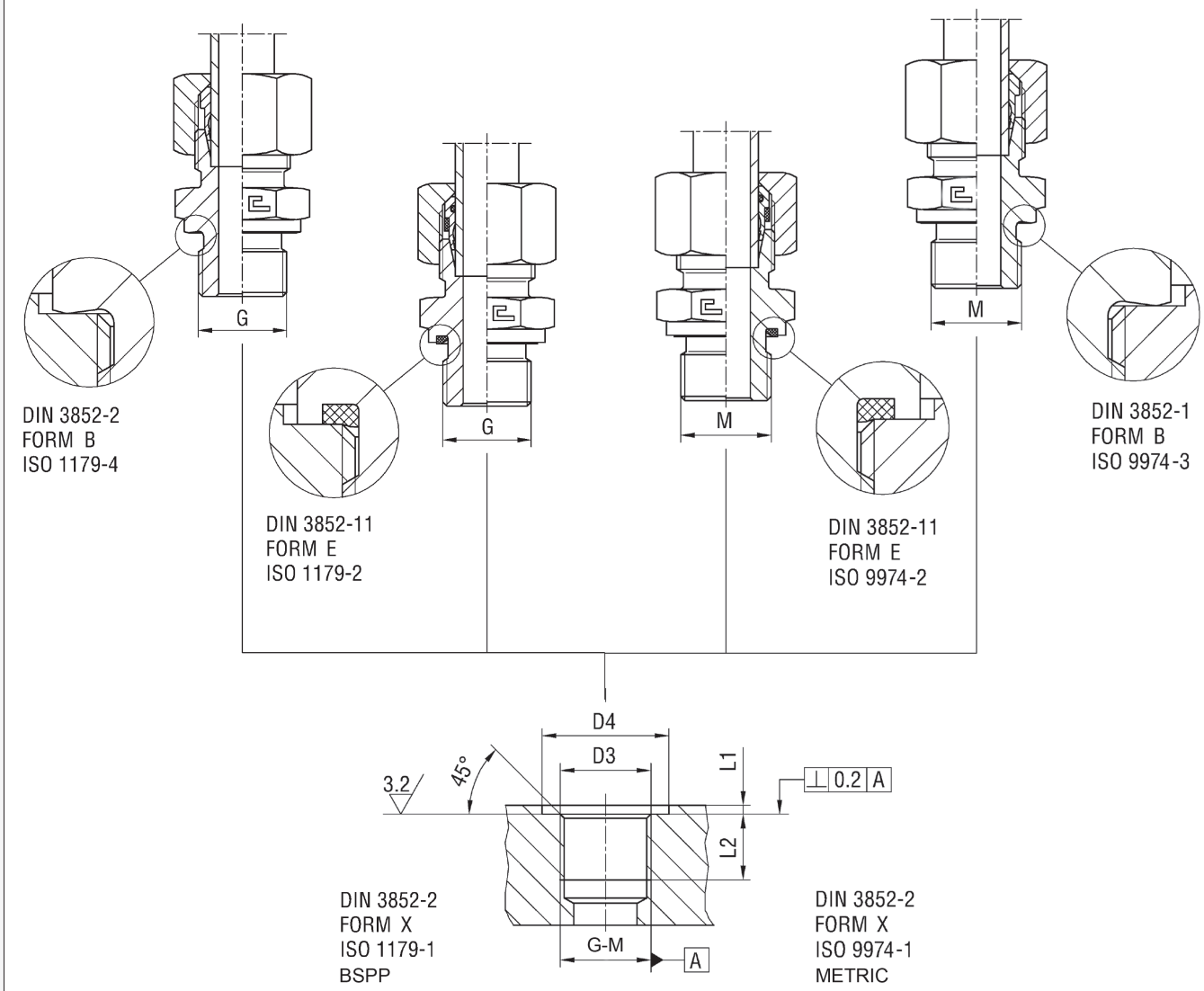

Series	ø Tube	BSPP Thread								Metric Parallel Thread							
		Dimensions						Tightening Torque Nm		Dimensions						Tightening Torque Nm	
		Thread	D3	D4 min form B/E	L1 max	L2 min	L rif	form B	form E	Thread	D3	D4 min form B/E	L1 max	L2 min	L rif	form B	form E
L	6	G 1/8	9.8	15	1	8	7.5	20	20	M10x1	10	15	1	8	7.6	20	20
	8	G 1/4	13.2	20	1.5	12	10.2	45	45	M12x1.5	12	18	1.5	12	9.7	30	30
	10	G 1/4	13.2	20	1.5	12	10.2	45	45	M14x1.5	14	20	1.5	12	9.7	45	45
	12	G 3/8	16.7	23	2	12	10.4	70	70	M16x11.5	16	23	1.5	12	10.2	60	55
	15	G 1/2	21	28	2.5	14	13.1	130	85	M18x1.5	18	25	2	12	10.9	80	70
	18	G 1/2	21	28	2.5	14	13.1	130	85	M22x1.5	22	28	2	14	12	130	120
	22	G 3/4	26.5	33	2.5	16	13.5	170	170	M26x1.5	26	33	5	16	-	180	170
	28	G 1	33.3	41	2.5	18	14.7	330	330	M33x2	33	41	2.5	18	13.8	330	330
	35	G 1.1/4	42	51	2.5	20	14.7	510	430	M42x2	42	51	2.5	20	13.8	470	430
	42	G 1.1/2	47.9	56	2.5	22	14.7	600	510	M48x2	48	56	2.5	22	15.3	600	510
S	6	G 1/4	13.2	20	1.5	12	10.2	55	55	M12x1.5	12	18	1.5	12	9.7	40	40
	8	G 1/4	13.2	20	1.5	12	10.2	55	55	M14x1.5	14	20	1.5	12	9.7	55	55
	10	G 3/8	16.7	23	2	12	10.4	85	80	M16x1.5	16	23	1.5	12	10.2	80	70
	12	G 3/8	16.7	23	2	12	10.4	85	80	M18x1.5	18	25	2	12	10.9	105	85
	14	G 1/2	21	28	2.5	14	13.1	150	110	M20x1.5	20	27	2	14	12	150	120
	16	G 1/2	21	28	2.5	14	13.1	150	110	M22x1.5	22	28	2.5	14	12	170	130
	20	G 3/4	26.5	33	2.5	16	13.5	280	170	M27x2	27	33	2.5	16	13.8	200	170
	25	G 1	33.3	41	2.5	18	14.7	330	330	M33x2	33	41	2.5	18	13.8	390	330
	30	G 1.1/4	42	51	2.5	20	14.7	510	430	M42x2	42	51	2.5	20	13.8	510	430
	38	G 1.1/2	47.9	56	2.5	22	14.7	680	510	M48x2	48	56	2.5	22	15.3	680	510

PIRTEK

This page is part of a complete catalogue containing technical and safety data.
All data must be reviewed when selecting a product.
Pirtek reserve the right to change technical specifications without notice

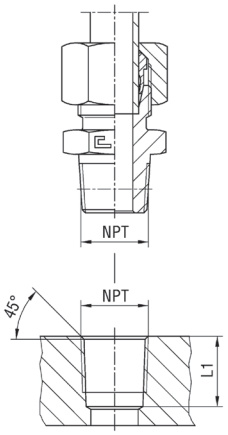

Table 1 refers

ANSI/ASME B1.20.1

ANSI/ASME B1.20.1

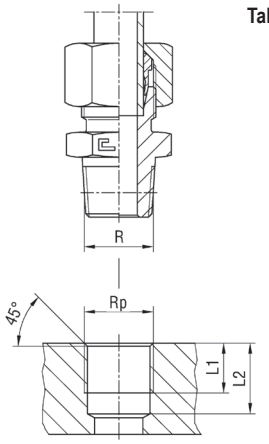

Table 2 refers

DIN 3852-2
FORM C

DIN 3852-2
FORM Z

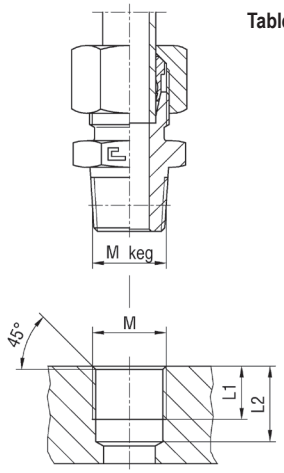

Table 3 refers

DIN 3852-1
FORM C

DIN 3852-1
FORM Z

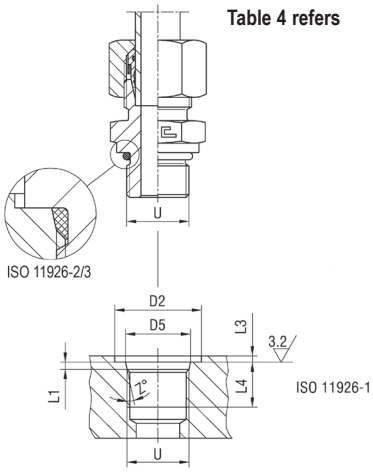

Table 4 refers

ISO 11926-1

Series	Tube	Table 1 NPT Thread Dimensions mm		Table 2 BSPT Thread Dimensions mm		
		NPT	L1	R	L1	L2
L	6	1/8-18 NPT	11.6	R 1/8	5.5	9.5
	8	1/4-18 NPT	16.4	R 1/4	8.5	13.5
	10	1/4-18 NPT	16.4	R 1/4	8.5	13.5
	12	3/8-18 NPT	17.4	R 3/8	8.5	13.5
	15	1/2-14 NPT	22.6	R 1/2	10.5	16.5
	18	1/2-14 NPT	22.6	R 1/2	10.5	16.5
	22	3/4-14 NPT	23.1	R 3/4	13	19
	28	1-11.5 NPT	27.8	R 1	-	-
	35	1.1/4-11.5 NPT	28.3	R 1.1/4	-	-
	42	1.1/2-11.5 NPT	28.3	R 1.1/2	-	-
S	6	1/4-18 NPT	16.4	R 1/4	8.5	13.5
	8	1/4-18 NPT	16.4	R 1/4	8.5	13.5
	10	3/8-18 NPT	17.4	R 3/8	8.5	13.5
	12	3/8-18 NPT	17.4	R 3/8	8.5	13.5
	14	1/2-14 NPT	22.6	R 1/2	10.5	16.5
	16	1/2-14 NPT	22.6	R 1/2	10.5	16.5
	20	3/4-14 NPT	23.1	R 3/4	13	19
	25	1-11.5 NPT	27.8	R 1	-	-
	30	1.1/4-11.5 NPT	28.3	R 1.1/4	-	-
	38	1.1/2-11.5 NPT	28.3	R 1.1/2	-	-

Series	Tube	Table 3 Metric Taper Dimensions mm		
		Metric Taper †	L1	L2
L	6	M10x1 keg	5.5	10
	8	M12x1.5 keg	8.5	13.5
	10	M14x1.5 keg	8.5	13.5
	12	M16x1.5 keg	8.5	13.5
	15	M18x1.5 keg	8.5	13.5
	18	M22x1.5 keg	10.5	15.5
S	6	M12x1.5 keg	8.5	13.5
	8	M14x1.5 keg	8.5	13.5
	10	M16x1.5 keg	8.5	13.5
	12	M18x1.5 keg	8.5	13.5
	14	M20x1.5 keg	10.5	15.5
	16	M22x1.5 keg	10.5	15.5

† 'keg' denotes the German 'kegelig' meaning 'tapered'

Series	Tube	Table 4 UNF/UN-2A Thread								
		U	Dimensions							Torque Nm
			D2 min	D5	L1	L3 max	L4 min	L rif	Z	
L	6	7/16-20 UNF-2A	21	12.45	2.4	1.6	11.5	9.9	12	20
	8	1/2-20 UNF-2A	23	14.05	2.4	1.6	11.5	9.9	12	25
	10	1/2-20 UNF-2A	23	14.05	2.4	1.6	11.5	9.9	12	25
	12	9/16-18 UNF-2A	25	15.7	2.5	1.6	12.7	11.1	12	30
	15	3/4-16 UNF-2A	30	20.65	2.5	2.4	14.3	12.5	15	45
	18	3/4-16 UNF-2A	30	20.65	2.5	2.4	14.3	12.5	15	45
	18	7/8-14 UNF-2A	34	24	2.5	2.4	16.7	14.5	15	55
	22	1.1/16-12 UNF-2A	41	29.2	3.3	2.4	19	16.8	15	85
	28	1.5/16-12 UNF-2A	49	35.55	3.3	3.2	19	16.8	15	130
	35	1.5/8-12 UNF-2A	58	43.55	3.3	3.2	19	16.8	15	170
	42	1.7/8-12 UNF-2A	65	49.9	3.3	3.2	19	16.8	15	180
S	6	1/2-20 UNF-2A	23	14.05	2.4	1.6	11.5	9.9	12	25
	8	1/2-20 UNF-2A	23	14.05	2.4	1.6	11.5	9.9	12	25
	10	9/16-18 UNF-2A	25	15.7	2.5	1.6	12.7	11.1	12	35
	12	9/16-18 UNF-2A	25	15.7	2.5	1.6	12.7	11.1	12	35
	14	3/4-16 UNF-2A	30	20.65	2.5	2.4	14.3	12.5	15	60
	16	3/4-16 UNF-2A	30	20.65	2.5	2.4	14.3	12.5	15	60
	16	7/8-14 UNF-2A	34	24	2.5	2.4	16.7	14.5	15	85
	20	1.1/16-12 UNF-2A	41	29.2	3.3	2.4	19	16.8	15	150
	25	1.5/16-12 UNF-2A	49	35.55	3.3	3.2	19	16.8	15	230
	30	1.5/8-12 UNF-2A	58	43.55	3.3	3.2	19	16.8	15	250
	38	1.7/8-12 UNF-2A	65	49.9	3.3	3.2	19	16.8	15	320

PIRTEK

This page is part of a complete catalogue containing technical and safety data.
All data must be reviewed when selecting a product.
Pirtek reserve the right to change technical specifications without notice

ASSEMBLY INSTRUCTIONS

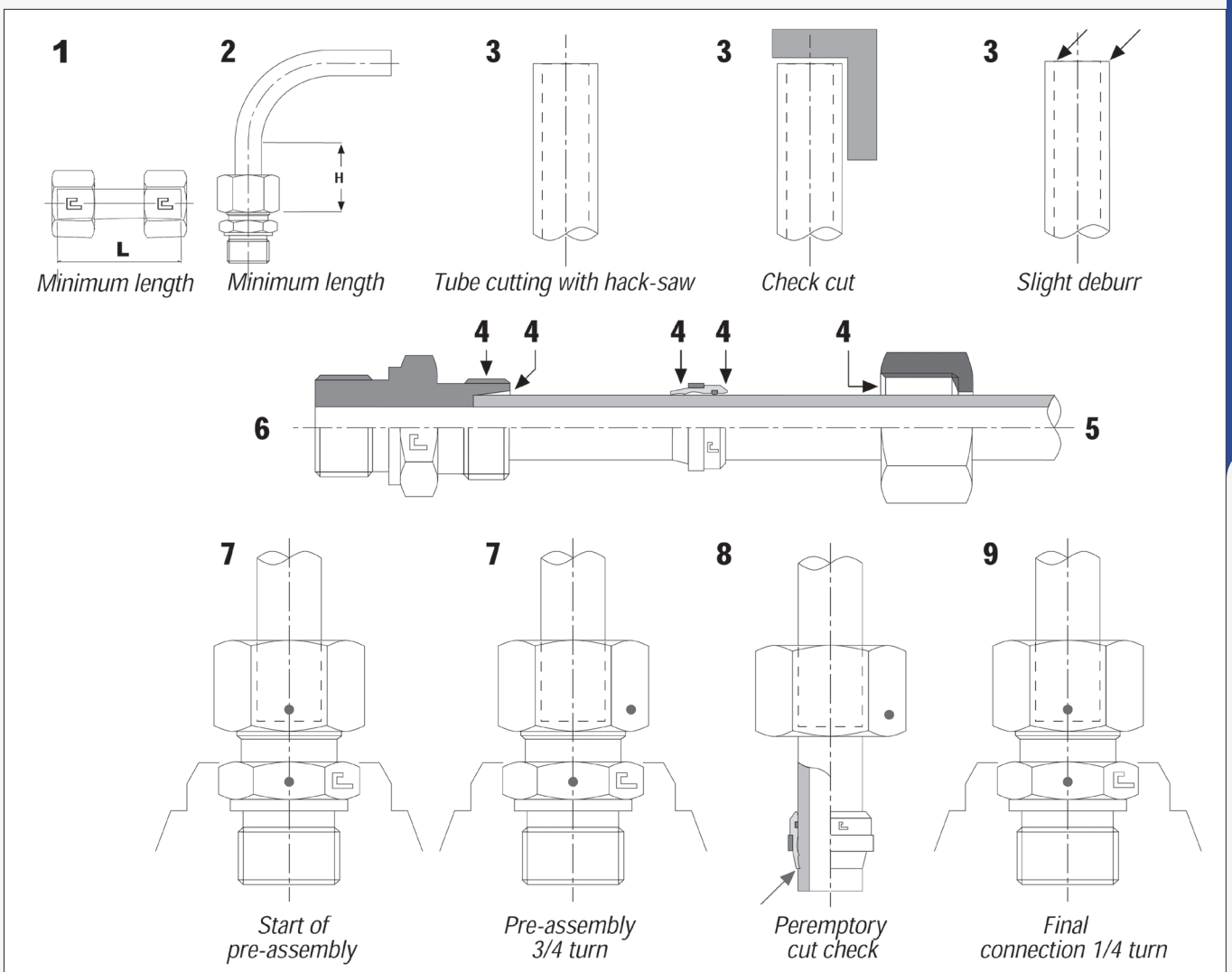

ø Tube	LL				L										S									
	4	5	6	8	6	8	10	12	15	18	22	28	35	42	6	8	10	12	14	16	20	25	30	38
H min	24	25	25	26	31	31	33	33	36	38	42	42	48	48	35	35	37	37	43	43	50	54	58	65
L min	30	32	32	33	39	39	42	42	45	48	53	53	60	60	44	44	47	47	54	54	63	68	73	82

1. Consult the table above for minimum length requirements
2. Cut the tube square with a hacksaw (*not a rolling wheel cutter*)
3. Check that the cut is square
4. Deburr the ends internally and externally
5. Slide the cutting ring and nut on the tube as depicted above
6. Oil all components
7. Mount the assembly piece in a vice (use a new adaptor)
8. Insert the oiled tube end into the assembly piece
9. Hold the tube end firmly against the internal ledge
10. Hand tighten the nut and ring onto the assembly piece
11. Use a spanner to engage the cutting ring onto the tube (about 1/2 turn). This takes up the clearances and prevents tube rotation
12. Place reference marks on the opposing nut and assembly piece - see Start point #7 illustrated
13. Use the reference marks to tighten a further 3/4 turn
14. Dissassemble and check that the cutting ring is buried to at least 80% of its leading edge - Check point #8 illustrated
15. Repeat pre assembly if 80% embedment is not achieved
16. Install the pre-assembled tube into its final location and tighten a further 1/4 turn - Final installation point #9
17. The procedure is the same for all sizes of tube

Cast S.p.A. have developed indicative tightening torques for the pre-assembly of cutting ring fittings based on practical tests in the laboratory, and they are detailed overleaf. If the tables are to be used for shop pre-assembly, the results should be checked as in Step 14 above before final installation and tightening.

PIRTEK

**This page is part of a complete catalogue containing technical and safety data.
All data must be reviewed when selecting a product.
Pirtek reserve the right to change technical specifications without notice**

Tightening Torques

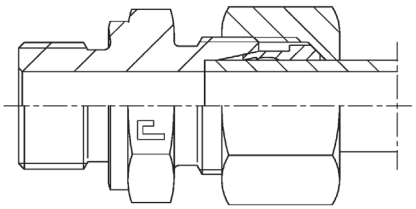

D Series Cutting Ring

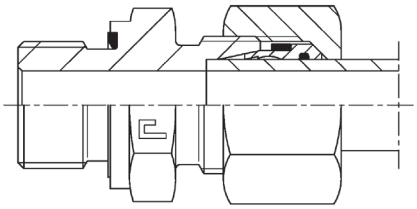

DB4 Series Cutting Ring

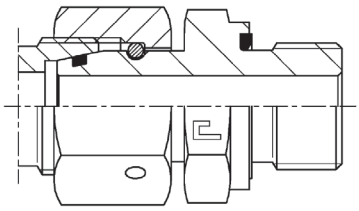

Swivel Nut arrangement

Series	Ø	Metric Thread	Cutting Ring Pre-assembly [a] Tightening Torque Nm		Swivel Nut Fittings Torque Nm
			Carbon Steel	Stainless Steel †	Carbon Steel
L	6	M12x1.5	20	30	20
	8	M14x1.5	25	55	35
	10	M16x1.5	30	85	40
	12	M18x1.5	40	120	45
	15	M22x1.5	60	130	55
	18	M26x1.5	90	220	110
	22	M30x2	170	320	130
	28	M36x2	210	500	200
	35	M45x2	360	970	220
	42	M52x2	490	1110	240
S	6	M14x1.5	25	45	40
	8	M16x1.5	30	55	45
	10	M18x1.5	40	90	50
	12	M20x1.5	50	105	60
	14	M22x1.5	70	150	80
	16	M24x1.5	80	180	100
	20	M30x2	140	340	160
	25	M36x2	230	530	240
	30	M42x2	300	610	260
	38	M52x2	430	850	350

† Only available to special order

[a] Refers to pre-assembly tightening only. Please consult the assembly instructions on the previous page for clarification

PIRTEK

This page is part of a complete catalogue containing technical and safety data.
All data must be reviewed when selecting a product.
Pirtek reserve the right to change technical specifications without notice

Nomenclature

The metric compression part numbering adopted by Pirtek is a derivation of a commonly adopted International system. It's basis is to be found within the German language, and is elaborated below to allow the interested reader to perhaps better understand the logic behind the Product Codes. Codes are aligned where possible with those used by Pirtek in Europe

Product Code	German derivation	English equivalent
AS	Anschweissen	Weld on
BUZ	Not derived from German	Sometimes called VKA (German for Verschlusskegel-Adaptor or stopper cone)
D	Doppel	Double (also called DS for Doppel-Schneid or double cutting ring)
DB4	No direct derivation	Used by Cast® to differentiate the elastomeric seal form of cutting ring
DSVW	Drehschwenk-Verschraubung-Winkel	Turn swivel screw together angle (Banjo coupling)
ED	Elastomerisch-Dichtung	Elastomeric seal (soft seal)
EZ	E=elastomerisch (Z suggests Z series bonded seals)	Elastomeric bonded seals for banjo type metric fittings DSVW
WD	Weich-Dicthung	Soft Seal
EDKO	Elastomerisch-Dichtung-Konus	Straight female joiner with elastomeric seals (konus = cone)
EDKOR	Elastomerisch-Dichtung-Konus-Reduzierung	Straight female reducing joiner with elastomeric seals (konus = cone)
EVGE	Einstellbar-Gerade-Einschraubung	Adjustable straight thread (Male stud coupling)
EVGER	Einstellbar-Gerade-Einschraubung-Reduzierung	Adjustable straight reducing thread (Male stud reducing coupling)
EVL	Einstellbar-Verschraubung 'L' pattern	Adjustable screw Tee with L configuration (adjustable barrel tee)
EVT	Einstellbar-Verschraubung 'T' pattern	Adjustable screw Tee with T configuration (adjustable branch tee)
EVW	Einstellbar-Verschraubung-Winkel	Adjustable screw elbow (adjustable elbow)
G	Gerade	Straight (Male Joiner)
GAI	Gerade-Adapter-Innengewinde	Straight adaptor with internal thread (female stud coupling)
GE	Gerade-Einschrauben	Straight screw in (male stud coupling)
GE-BSPP ED	ED suffix (elastomerisch Dichtung)	BSPP thread uses an elastomeric soft seal
GE-BSPP Form B	Form B suffix	BSPP thread uses a Form B type seal (see page E25)
GM	Gegen-Mutter	Against Nut (lock nut)
GSV	Gerade-Schott-Verschraubung	Straight bulkhead screw (straight bulkhead coupling)
GV	Gerade-Verschraubung	Straight threaded connection (reserved for reducing G series within Pirtek)
KOR	Konus-Reduzieranschlusse	Straight conical reducing connector (male female)
LE-BSPT	L configuration Einschraub-Verschraubung	L configuraion screw in BSPT threaded Tee (male stud barrel tee)
M	Mutter	Nut
MAV	Manometer-Anschlussverschraubung	Gauge connection screw thread (gauge coupling male thread)
MAVE	Manometer-Anschlussverschraubung-Einstellbar	Gauge connection adjustable screw thread (gauge coupling female thread)
NRV	Ruckschlag-Ventile	Non return valve
RI	Reduziering-Innengewinde	Reducing Bush
ROV	Rohr-Verschluss	Tube blanking plug
SKA	Schweisskegel-Adapter	Weld taper adaptor (weld nipple)
T	Tee	Equal Tee Coupling
TE-BSPT	T configuration Einschraub-Verschraubung	T configuraion screw in BSPT threaded Tee (male stud branch tee)
VSTI	Verschlussschrauben	Socket Head Port Plug (metric thread)
VSTIR	R suffix	Rohr (BSPP pipe thread)
W	Winkel	Elbow
WE-BSPT	Winkel-Einschrauben	Screw in elbow with BSPT thread
WSV	Winkel-Schott-Verschraubung	Elbow bulkhead threaded connection
'k' or 'keg' Suffix	kegelig	tapered
'R' Suffix	Rohr	BSPT pipe thread (the meaning changes in some contexts to reducing)
'ED' Suffix	Elastomerisch-Dichtung	Elastomeric seal (soft seal)
'N' or 'NPT' Suffix	NPT	NPT thread
'G' Suffix	Gas	BSPP thread

- Metric tube sizes are expressed in millimetres using 2 digits in association with the tube weight eg 12L or 14S
- Metric threads are expressed in the form M27x2 indicating thread diameter and pitch in millimetres
- Imperial thread sizes are expressed as fractions of an inch (eg R1/4 or 1/2NPT) to avoid the use of Dash Sizes that may otherwise resemble metric tube sizes
- Tube weights are denoted as LL, L and S

  LL = super light L = light (from the German 'leicht') S = heavy (from the German 'schwer')

This page is part of a complete catalogue containing technical and safety data.
All data must be reviewed when selecting a product.
Pirtek reserve the right to change technical specifications without notice

This page is intentionally blank

PIRTEK
This page is part of a complete catalogue containing technical and safety data.
All data must be reviewed when selecting a product.
Pirtek reserve the right to change technical specifications without notice

D Cutting Ring

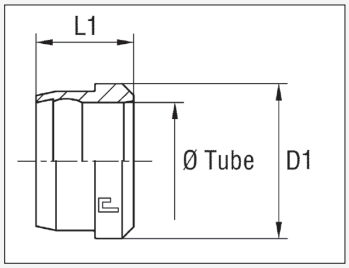

Series	Max. W.P. bar	Product Code	Dimensions mm			
		Standard Ring	Ø Tube	L1	D1	D2
LL	100	D-04LL	4	6	6	-
		D-06LL	6	7	8	-
		D-08LL	8	7	10	-
L	315	D-06L/S	6	9.5	10	10
		D-08L/S	8	9.5	12	12
		D-10L/S	10	10	14	14
		D-12L/S	12	10	16	16
		D-15L	15	10	19	20
		D-18L	18	10	23	23
	160	D-22L	22	10.5	27	27
		D-28L	28	11	33	33
		D-35L	35	13	41	41
		D-42L	42	13	48	48
S	630	D-06L/S	6	9.5	10	10
		D-08L/S	8	9.5	12	12
		D-10L/S	10	10	14	14
		D-12L/S	12	10	16	16
		D-14S	14	10	19	19
	400	D-16S	16	10.5	21	21
		D-20S	20	12	26	26
		D-25S	25	12	32	32
		D-30S	30	13	36	38
	315	D-38S	38	13	44	48

M Tightening Nut

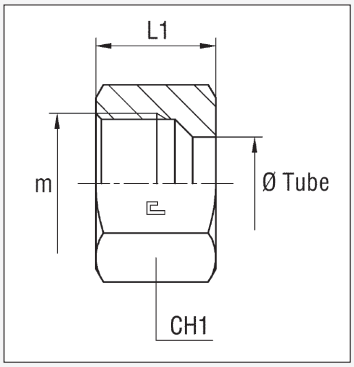

Series	Max. W.P. bar	Product Code	Dimensions mm			
			Ø Tube	m	L1	CH1
LL	100	M-04LL	4	8x1	11	10
		M-06LL	6	10x1	11.5	12
		M-08LL	8	12x1	12	14
L	315	M-06L	6	12x1.5	14.5	14
		M-08L	8	14x1.5	14.5	17
		M-10L	10	16x1.5	15.5	19
		M-12L	12	18x1.5	15.5	22
		M-15L	15	22x1.5	17	27
		M-18L	18	26x1.5	18	32
	160	M-22L	22	30x2	20	36
		M-28L	28	36x2	21	41
		M-35L	35	45x2	24	50
		M-42L	42	52x2	24	60
S	630	M-06S	6	14x1.5	16.5	17
		M-08S	8	16x1.5	16.5	19
		M-10S	10	18x1.5	17.5	22
		M-12S	12	20x1.5	17.5	24
		M-14S	14	22x1.5	20.5	27
	400	M-16S	16	24x1.5	20.5	30
		M-20S	20	30x2	24	36
		M-25S	25	36x2	27	46
		M-30S	30	42x2	29	50
	315	M-38S	38	52x2	32.5	60

PIRTEK
This page is part of a complete catalogue containing technical and safety data.
All data must be reviewed when selecting a product.
Pirtek reserve the right to change technical specifications without notice

GE Male Stud Coupling
NPT Thread

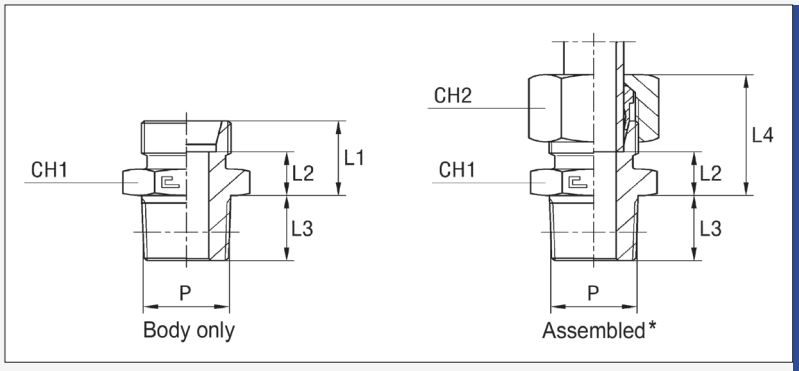

* Supplied as body only unless otherwise specified. Add 'C' to the end of the Product Code if a Nut and Cutting Ring are required. eg GE-12L3/8NPTC

Series	Max. W.P. bar	Product Code (Body only)	Dimensions mm							
			ø Tube	P (NPT)	L1	L2	L3	L4	CH1	CH2
LL	100	GE-04LL1/8NPT †	4	1/8	-	-	-	-	-	-
		GE-08LL1/8NPT †	8	1/8	-	-	-	-	-	-
L	315	GE-06L1/8NPT	6	1/8	14	7	10	22	12	14
		GE-06L1/4NPT	6	1/4	15	8	15	22.5	14	14
		GE-08L1/4NPT	8	1/4	15	8	15	23	17	17
		GE-10L1/8NPT	10	1/8	16	9	10	24	17	19
		GE-10L1/4NPT	10	1/4	16	9	15	24	17	19
		GE-10L3/8NPT	10	3/8	17	10	15	25	19	19
		GE-12L1/4NPT	12	1/4	17	10	15	24.5	19	22
		GE-12L3/8NPT	12	3/8	17	10	15	24.5	19	22
		GE-12L1/2NPT	12	1/2	17.5	10.5	19.5	25	22	22
		GE-15L1/2NPT	15	1/2	18.5	11.5	19.5	26.5	24	27
		GE-18L1/2NPT	18	1/2	19.5	12	19.5	28.5	27	32
	160	GE-22L3/4NPT	22	3/4	21	13.5	20	30	32	36
		GE-28L1NPT	28	1	22	14.5	25	31	41	41
		GE-35L11/4NPT	35	1.1/4	25.5	15	25.5	36.5	46	50
		GE-42L11/2NPT	42	1.1/2	27	16	26	39	55	60
S	630	GE-06S1/4NPT	6	1/4	18	11	15	26	17	17
		GE-08S1/4NPT	8	1/4	20	13	15	28	17	19
		GE-10S1/4NPT	10	1/4	-	-	-	-	-	-
		GE-10S3/8NPT	10	3/8	20	12.5	15	28.5	19	22
		GE-10S3/8NPT	10	3/8	20	12.5	15	28.5	19	22
		GE-12S1/2NPT	12	1/2	22.5	15	19.5	31	22	24
		GE-12S3/8NPT	12	3/8	22	14.5	15	30.5	22	24
		GE-14S1/2NPT	14	1/2	24.5	16.5	19.5	34.5	24	27
	400	GE-16S1/2NPT	16	1/2	24.5	16	19.5	34.5	27	30
		GE-20S3/4NPT	20	3/4	28	17.5	20	39	32	36
		GE-25S1NPT	25	1	32	20	25	44	41	46
		GE-30S11/4NPT	30	1.1/4	34.5	21	25.5	47.5	46	50
	315	GE-38S11/2NPT	38	1.1/2	39	23	26	54	55	60

† Indent item, available on request

GE Male Stud Coupling
JIC Thread

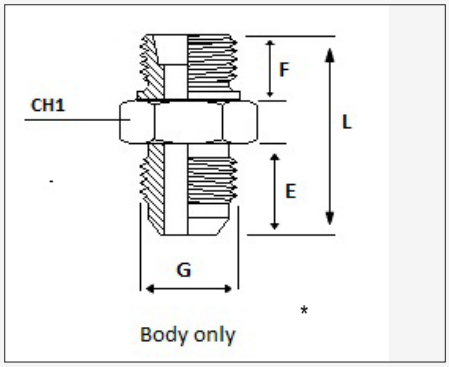

** Supplied as body only unless otherwise specified.
Add 'C' to the end of the Product Code if a Nut & Cutting Ring are required, eg. GE-10L9/16JICC

Series	Max. W.P bar	Product Code (Body only)	Dimensions mm					
			Ø Tube	G (JIC)	E	F	L	CH1
L	315	GE-06L7/16JIC †	6	7/16	14	10	31	14
		GE-06L9/16JIC †	6	9/16	14	10	31	17
		GE-08L9/16JIC †	8	9/16	14	10	31	17
		GE-10L9/16JIC	10	9/16	14	11	31	17
		GE-12L9/16JIC †	12	9/16	14	11	32	19
		GE-08L3/4JIC †	8	3/4	17	10	34	22
		GE-10L3/4JIC †	10	3/4	17	11	35	22
		GE-12L3/4JIC †	12	3/4	17	11	35	22
		GE-15L3/4JIC †	15	3/4	17	12	38	24
		GE-12L7/8JIC †	12	7/8	19	11	40	24
		GE-15L7/8JIC †	15	7/8	19	12	41	24
		GE-18L7/8JIC †	18	7/8	19	12	42	27
		GE-15L1.1/16JIC †	15	1.1/16	22	12	43	30
	160	GE-22L1.1/16JIC †	22	1.1/16	22	14	47	32
		GE-28L1.5/16JIC †	28	1.5/16	23	14	48	41
		GE-35L1.5/8JIC †	35	1.5/8	24	16	53	46
		GE-42L1.7/8JIC †	42	1.7/8	27	16	58	60

† Indent item, available on request

PIRTEK

This page is part of a complete catalogue containing technical and safety data.
All data must be reviewed when selecting a product.
Pirtek reserve the right to change technical specifications without notice

GE Male Stud Coupling
BSPT Thread

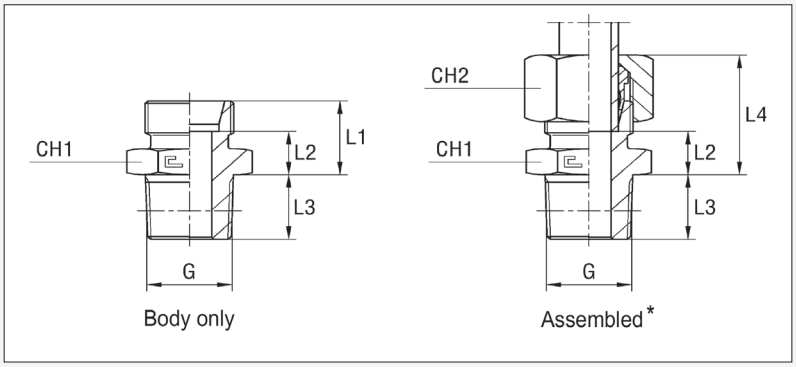

* Supplied as body only unless otherwise specified. Add 'C' to the end of the Product Code if a Nut and Cutting Ring are required. eg GE-12LRK3/8C

Series	Max. W.P bar	Product Code (Body only)	Dimensions mm							
			ø Tube	G (BSPT)	L1	L2	L3	L4	CH1	CH2
LL	100	GE-06LLRK1/8	6	1/8	12	6.5	8	18.5	12	12
L	315	GE-06LRK1/8	6	1/8	14	7	8	22	12	14
		GE-06LRK1/4	6	1/4	15	8	12	22.5	14	14
		GE-08LRK1/4	8	1/4	15	8	12	23	17	17
		GE-10LRK1/8	10	1/8	18	8	10.2	25	17	19
		GE-10LRK1/4	10	1/4	16	9	12	24	17	19
		GE-10LRK3/8	10	3/8	17	10	12	25	19	19
		GE-12LRK1/4	12	1/4	17	10	15	24.5	19	22
		GE-12LRK3/8	12	3/8	17	10	12	24.5	19	22
		GE-12LRK1/2	12	1/2	17	10	14	24.5	22	22
		GE-15LRK1/2	15	1/2	18	11	14	26	24	27
		GE-18LRK1/2	18	1/2	19	11.5	14	28	27	32
	160	GE-22LRK3/4	22	3/4	21	13.5	16	30	32	36
		GE-28LRK1	28	1	22	14.5	18	31	41	41
		GE-35LRK11/4 †	35	1 1/4	25	14.5	20	36	46	50
		GE-42LRK11/2 †	42	1 1/2	27	16	22	39	55	60

† Indent item, available on request

GE Male Stud Coupling
BSPP Thread
Elastomer Seal (ED)

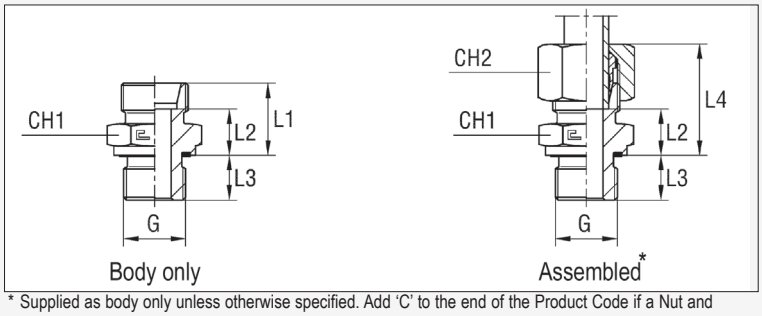

* Supplied as body only unless otherwise specified. Add 'C' to the end of the Product Code if a Nut and Cutting Ring are required. eg GE-12LR1/2EDC

Series	Max. W.P. bar	Product Code (Body only)	Dimensions mm							
			ø Tube	G -(BSPP)	L1	L2	L3	L4	CH1	CH2
LL	100	GE-04LLR1/8ED	4	1/8	13.5	9.5	8	20	14	10
		GE-06LLR1/8ED	6	1/8	13.5	8	8	20	14	12
		GE-08LLR1/8ED	8	1/8	14.5	9	8	21	14	14
L	315	GE-06LR1/8ED	6	1/8	15.5	8.5	8	23	14	14
		GE-06LR1/4ED	6	1/4	17	10	12	24.5	19	14
		GE-06LR3/8ED	6	3/8	18.5	11.5	12	26	22	14
		GE-08LR1/8ED	8	1/8	16.5	9.5	8	24.5	14	17
		GE-08LR1/4ED	8	1/4	17	10	12	25	19	17
		GE-08LR3/8ED	8	3/8	18.5	11.5	12	26.5	22	17
		GE-10LR1/4ED	10	1/4	18	11	12	26	19	19
		GE-10LR3/8ED	10	3/8	19.5	12.5	12	27.5	22	19
		GE-10LR1/2ED	10	1/2	20	13	14	28	27	19
		GE-12LR1/4ED	12	1/4	19	12	12	26.5	19	22
		GE-12LR3/8ED	12	3/8	19.5	12.5	12	27	22	22
		GE-12LR1/2ED	12	1/2	20	13	14	27.5	27	22
		GE-15LR3/8ED †	15	3/8	20.5	13.5	12	28.5	24	27
		GE-15LR1/2ED	15	1/2	21	14	14	29	27	27
		GE-15LR3/4ED	15	3/4	22	15	16	30	32	27
		GE-18LR1/2ED	18	1/2	22	14.5	14	31	27	32
		GE-18LR3/4ED	18	3/4	22	14.5	16	31	32	32
	160	GE-22LR1/2ED	22	1/2	24	16.5	14	33	32	36
		GE-22LR3/4ED	22	3/4	24	16.5	16	33	32	36
		GE-22LR1ED	22	1	25	17.5	18	34	41	36
		GE-28LR3/4ED	28	3/4	25	17.5	16	34	41	41
		GE-28LR1ED	28	1	25	17.5	18	34	41	41
		GE-35LR11/4ED	35	1.1/4	28	17.5	2	39	50	50
		GE-42LR11/2ED	42	1.1/2	30	19	22	42	55	60
S	630	GE-06SR1/4ED	6	1/4	20	13	12	28	19	17
		GE-08SR1/4ED	8	1/4	22	15	12	30	19	19
		GE-08SR3/8ED	8	3/8	22.5	15.5	12	30.5	22	19
		GE-10SR1/4ED †	10	1/4	22	14.5	12	30.5	19	22
		GE-10SR3/8ED	10	3/8	22.5	15	12	31	22	22
		GE-12SR1/4ED	12	1/4	24	16.5	12	32.5	22	24
		GE-12SR3/8ED	12	3/8	24.5	17	12	33	22	24
		GE-12SR1/2ED	12	1/2	25	17.5	14	33.5	27	24
		GE-14SR1/2ED	14	1/2	26.5	18	12	36.5	27	30
	400	GE-16SR3/8ED †	16	3/8	26.5	18	12	36.5	27	30
		GE-16SR1/2ED	16	1/2	27	18.5	14	37	27	30
		GE-16SR3/4ED	16	3/4	29	20.5	16	39	32	30
		GE-20SR1/2ED	20	1/2	31	20.5	14	42	32	36
		GE-20SR3/4ED	20	3/4	31	20.5	16	42	32	36
		GE-20SR1ED	20	1	33	22.5	18	44	41	36
		GE-25SR3/4ED	25	3/4	35	23	16	47	41	46
		GE-25SR1ED	25	1	35	23	18	47	41	46
		GE-30SR1ED	30	1	37	23.5	18	50	46	50
		GE-30SR11/4ED	30	1.1/4	37	23.5	20	50	50	50
	315	GE-38SR11/4ED	38	1.1/4	42	26	20	57	55	60
		GE-38SR11/2ED	38	1.1/2	42	26	22	57	55	60

† Indent item, available on request

PIRTEK

This page is part of a complete catalogue containing technical and safety data.
All data must be reviewed when selecting a product.
Pirtek reserve the right to change technical specifications without notice

GE Male Stud Coupling
Metric Taper Thread

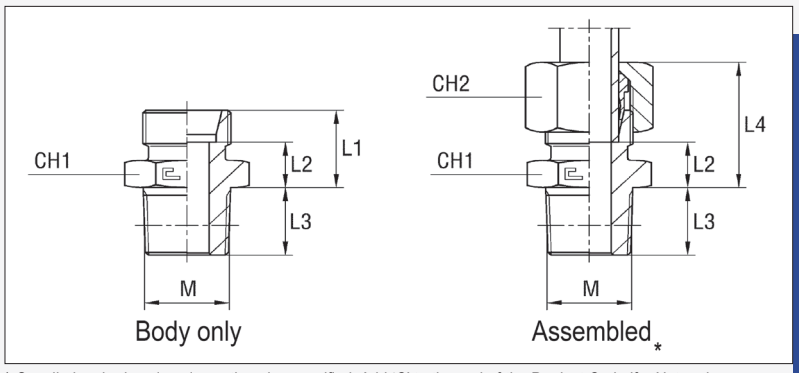

* Supplied as body only unless otherwise specified. Add 'C' to the end of the Product Code if a Nut and Cutting Ring are required. eg GE-04LLMK8x1C

Series	Max. W.P. bar	Product Code (Body only)	Dimensions mm							
			Ø Tube	M	L1	L2	L3	L4	CH1	CH2
LL	100	GE-04LLMK8x1 †	4	8 x 1	12	8	-	18.5	12	10
		GE-06LLMK6x1	6	6 x 1	12	6.5	8	18.5	12	12
		GE-06LLMK8x1	6	8 x 1	12	6.5	8	18.5	12	12
		GE-08LLMK10x1 †	8	10 x 1	14	8.5	-	20.5	12	14

† Indent item, available on request

GE Male Stud Coupling
Metric Parallel Thread
Elastomer Seal (ED)

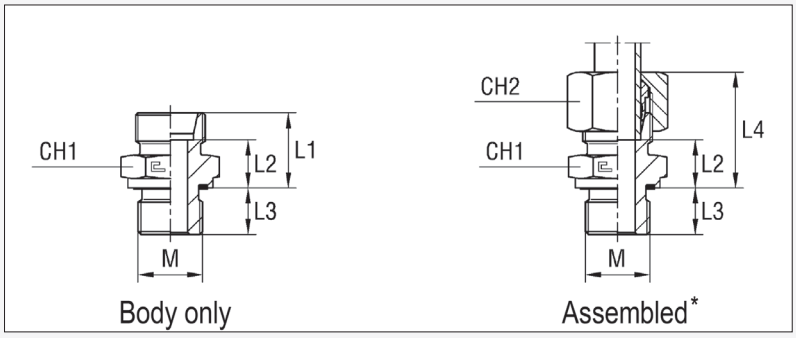

* Supplied as body only unless otherwise specified. Add 'C' to the end of the Product Code if a Nut and Cutting Ring are required. eg GE-15LM18x1.5EDC

Series	Max. W.P. bar	Product Code (Body only)	Dimensions mm							
			ø Tube	M	L1	L2	L3	L4	CH1	CH2
LL	100	GE-04LLM8X1ED	4	8 x 1	13.5	9.5	8	20	12	10
		GE-08LLM10X1ED	8	10 x 1	14.5	9	8	21	14	14
L	400	GE-06LM10x1ED	6	10 x 1	15.5	8.5	8	23	14	14
		GE-08LM12x1.5ED	8	12 x 1.5	17	10	12	25	17	17
		GE-10LM14x1.5ED	10	14 x 1.5	18	11	12	26	19	19
		GE-10LM16X1.5ED	10	16 x 1.5	19.5	12.5	12	27.5	22	19
		GE-12LM14X1.5ED	12	14.5 x 1.5	19.5	12.5	12	27	19	22
		GE-12LM16x1.5ED	12	16 x 1.5	19.5	12.5	12	27	22	22
		GE-12LM18x1.5ED	12	18 x 1.5	20.5	12.5	12	27	22	27
		GE-15LM16x1.5ED	15	16 x 1.5	20.5	13.5	12	29	24	27
		GE-15LM18x1.5ED	15	18 x 1.5	20.5	13.5	12	29	24	27
		GE-15LM22x1.5ED	15	22 x 1.5	20.5	13.5	14	29	24	32
		GE-18LM22x1.5ED	18	22 x 1.5	22	14.5	14	31	27	32
	250	GE-22LM22x1.5ED	22	22 x 1.5	24	16.5	16	33	32	36
		GE-22LM26x1.5ED	22	26 x 1.5	24	16.5	16	33	32	36
		GE-28LM33x2ED	28	33 x 2	25	17.5	18	34	41	41
		GE-35LM42x2ED	35	42 x 2	28	17.5	20	39	50	50
		GE-42LM48x2ED	42	48 x 2	30	19	22	42	55	60
S	630	GE-06SM12x1.5ED	6	12 x 1.5	20	13	12	28	17	17
		GE-08SM14x1.5ED	8	14 x 1.5	22	15	12	30	19	19
		GE-10SM16x1.5ED	10	16 x 1.5	22.5	15	12	31	22	22
		GE-12SM18x1.5ED	12	18 x 1.5	24.5	17	12	33	24	24
		GE-14SM20x1.5ED	14	20 x 1.5	27	19	14	37	27	27
	400	GE-16SM22x1.5ED	16	22 x 1.5	27	18.5	14	37	27	30
		GE-20SM27x2ED	20	27 x 2	31	20.5	16	42	32	36
		GE-25SM33x2ED	25	33 x2	35	23	18	47	41	46
		GE-30SM42x2ED	30	42 x 2	37	23.5	20	50	50	50
	315	GE-38SM48x2ED †	38	48 x 2	42	36	22	57	55	60

† Indent item, available on request

PIRTEK
This page is part of a complete catalogue containing technical and safety data.
All data must be reviewed when selecting a product.
Pirtek reserve the right to change technical specifications without notice

GE Male Stud Coupling
UN-O Thread

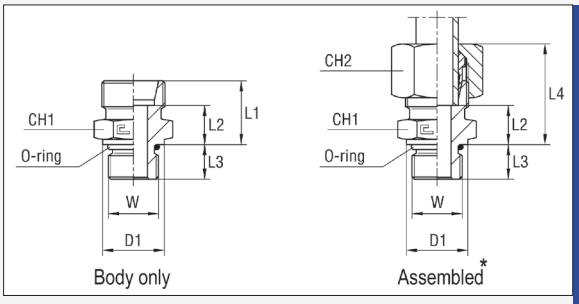

* Supplied as body only unless otherwise specified. Add 'C' to the end of the Product Code if a Nut and Cutting Ring are required. eg GE-18L3/4UNFC

Series	Max. W.P. bar	Product Code (Body only)	Dimensions mm								
			ø Tube	W	D1	L1	L2	L3	L4	CH1	CH2
L	315	GE-08L9/16UNF	8	9/16 - 18	17.6	14.5	9	10	25	17	17
		GE-12L9/16UNF	12	9/16 - 18	18.8	18	11	10	25.5	19	22
		GE-12L3/4UNF	12	3/6 - 16	21.8	19.9	12.9	11.1	27.5	22	22
		GE-12L7/8UNF	12	7/8 - 14	26.8	21.3	14.3	12.7	29	27	22
		GE-18L3/4UNF	18	3/4 - 16	21.8	21.9	14.4	11.1	31	27	32
S	400	GE-08S9/16UNF	8	9/16 - 18	13 4/5	20	11	12	30.5	19	19
		GE-12S9/16UNF	12	9/16 - 18	18 4/5	22	14.5	10	30.5	22	24
		GE-16S3/4UNF	16	3/4 - 16	21.8	23.9	15.4	11.1	34	27	30
		GE-16S7/8UNF	16	7/8 - 14	26.8	27.3	18.8	12.7	37.5	27	30
		GE-20S3/4UNF	20	3/4 - 16	21.8	30.9	20.4	11.1	42	32	36
		GE-20S7/8UNF	20	7/8 - 14	26.8	31.3	20.8	12.7	42.5	32	36
		GE-20S11/16UNF	20	1.1/16 - 12	31.8	30.9	20.4	15.1	42	32	36

G Straight Tube Coupling

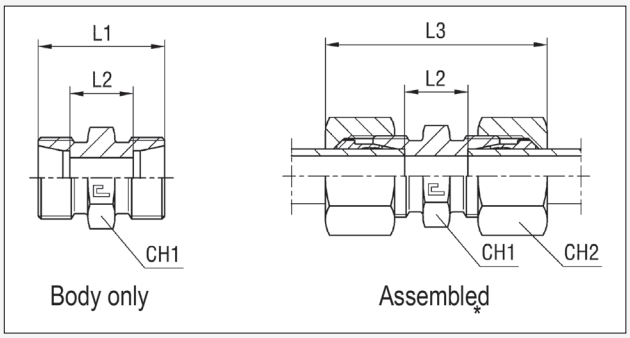

* Supplied as body only unless otherwise specified. Add 'C' to the end of the Product Code if Nuts and Cutting Rings are required. eg G-12LC

Series	Max. W.P. bar	Product Code (Body only)	Dimensions mm					
			ø Tube	W	D1	L1	L2	L3
LL	100	G-04LL †	4	20	12	31	12	10
		G-06LL	6	20	9	32	12	12
		G-08LL	8	23	12	35	12	14
L	315	G-06L	6	24	10	39	12	14
		G-08L	8	25	11	40	14	17
		G-10L	10	27	13	42	17	19
		G-12L	12	28	14	43	19	22
		G-15L	15	30	16	46	24	27
		G-18L	18	31	16	48	27	32
	160	G-22L	22	35	20	52	32	36
		G-28L	28	36	21	54	41	41
		G-35L	35	41	20	63	46	50
		G-42L	42	43	21	66	55	60
S	630	G-06S	6	30	16	45	14	17
		G-08S	8	32	18	47	17	19
		G-10S	10	32	17	49	19	22
		G-12S	12	34	19	51	22	24
		G-14S	14	38	22	57	24	27
	400	G-16S	16	38	21	57	27	30
		G-20S	20	44	23	66	32	36
		G-25S	25	50	26	74	41	46
		G-30S	30	54	27	80	46	50
	315	G-38S	38	61	29	90	55	60

† Indent Item, available on request

GV Straight Reducing Coupling

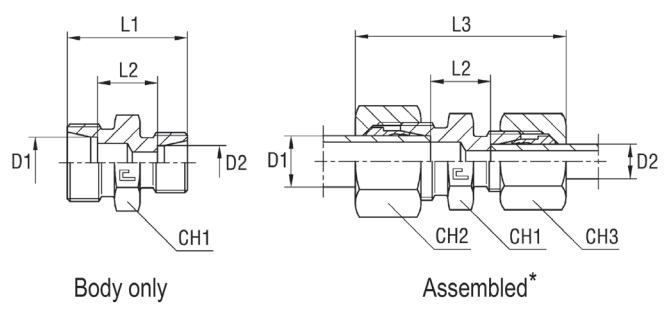

* Supplied as body only unless otherwise specified. Add 'C' to the end of the Product Code if Nuts and Cutting Rings are required. eg GV-12L/10LC

Series	Max. W.P. bar	Product Code (Body only)	Dimensions mm							
			ø Tube		L1	L2	L3	CH1	CH2	CH3
			D1	D2						
LL	100	GV-06LL/04LL †	6	4	-	-	-	-	-	-
		GV-08LL/04LL †	8	4	-	-	-	-	-	-
		GV-08LL/06LL †	8	6	-	-	-	-	-	-
L	315	GV-08L/06L †	8	6	25	11	40.5	14	17	14
		GV-10L/06L	10	6	26	12	41.5	17	19	14
		GV-10L/08L †	10	8	26	12	42	17	19	17
		GV-12L/06L †	12	6	27	13	42	19	22	14
		GV-12L/08L †	12	8	27	13	42.5	19	22	17
		GV-12L/10L	12	10	28	14	43.5	19	22	19
		GV-15L/10L †	15	10	29	15	45	24	27	19
		GV-15L/12L	15	12	29	15	44.5	24	27	22
		GV-18L/10L †	18	10	30	15.5	47	27	32	19
		GV-18L/12L †	18	12	30	15.5	46.5	27	32	22
		GV-18L/15L †	18	15	31	16.5	48	27	32	27
	160	GV-22L/12L †	22	12	32	17.5	48.5	32	36	22
		GV-22L/15L †	22	15	33	18.5	50	32	36	27
		GV-22L/18L †	22	18	33	18	51	32	36	32
		GV-28L/18L †	28	18	34	19	52	41	41	32
		GV-28L/22L †	28	22	36	21	54	41	41	36
		GV-35L/22L †	35	22	39	21	59	46	50	36
		GV-35L/28L †	35	28	39	21	59	46	50	41
S	630	GV-08S/06S †	8	6	32	18	48	17	19	17
		GV-10S/06S †	10	6	32	17.5	48.5	19	22	17
		GV-10S/08S †	10	8	32	17.5	48.5	19	22	19
		GV-12S/06S †	12	6	34	19.5	50.5	22	24	17
		GV-12S/08S †	12	8	34	19.5	50.5	22	24	19
		GV-12S/10S †	12	10	34	19	51	22	24	22
		GV-14S/10S †	14	10	36	20.5	54.5	24	27	22
		GV-14S/12S †	14	12	36	20.5	54.5	24	27	24
	400	GV-16S/12S †	16	12	36	20	54.5	27	30	24
		GV-16S/14S †	16	14	38	21.5	58	27	30	27
		GV-20S/10S †	20	10	40	22	59.5	32	36	22
		GV-20S/12S †	20	12	40	22	59.5	32	36	24
		GV-20S/16S †	20	16	42	23	63	32	36	30
		GV-25S/16S †	25	16	46	25.5	68	41	46	30
		GV-25S/20S †	25	20	48	25.5	71	41	46	36
		GV-30S/20S †	30	20	50	26	74	46	50	36
		GV-30S/25S †	30	25	52	26.5	77	46	50	46
	315	GV-38S/30S †	38	30	59	29.5	87	55	60	50

† Non-Stocked item, availble on request

PIRTEK
This page is part of a complete catalogue containing technical and safety data.
All data must be reviewed when selecting a product.
Pirtek reserve the right to change technical specifications without notice

EDKO Straight Female Coupling

Equal Ends

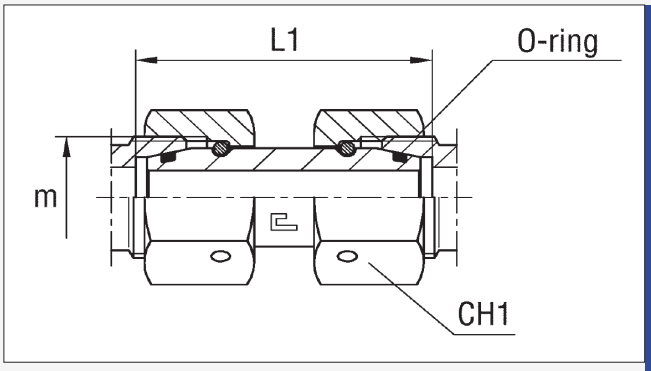

Series	Max. W.P. bar	Product Code (Assembled)	Dimensions mm			
			ø Tube	m	L1	CH1
L	315	EDKO-06L	6	12 x 1.5	40	14
		EDKO-08L	8	14 x 1.5	40	17
		EDKO-10L	10	16 x 1.5	39	19
		EDKO-12L	12	18 x 1.5	39	22
		EDKO-15L	15	212 x 1.5	45	27
		EDKO-18L	18	26 x 1.5	43	32
	160	EDKO-22L	22	30 x 2	48	36
		EDKO-28L	28	36 x 2	49	41
		EDKO-35L †	35	45 x 2	60	50
		EDKO-42L	42	52 x 2	60	60
S	630	EDKO-06S	6	14 x 1.5	37	17
		EDKO-08S	8	16 x 1.5	38	19
		EDKO-10S	10	18 x 1.5	44	22
		EDKO-12S	12	20 x 1.5	41	24
		EDKO-14S	14	22 x 1.5	44	27
	400	EDKO-16S	16	24 x 1.5	51	30
		EDKO-20S	20	30 x 2	56	36
		EDKO-25S	25	36 x 2	60	46
		EDKO-30S	30	42 x 2	62	50
	315	EDKO-38S †	38	52 x 2	70	60

† Indent Item, available on request

SV Straight Bulkhead Coupling

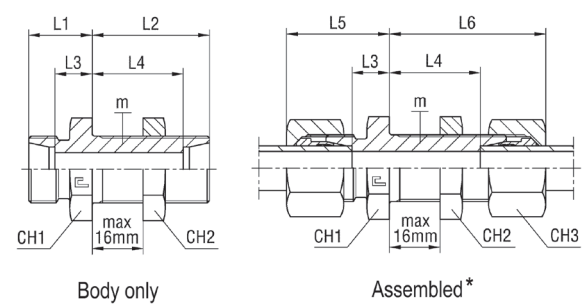

* Supplied as body only unless otherwise specified. Add 'C' to the end of the Product Code if Nuts and Cutting Rings are required. eg SV-15LC

Series	Max. W.P. bar	Product Code (Body only)	Dimensions mm										
			Ø Tube	m	L1	L2	L3	L4	L5	L6	CH1	CH2	CH3
L	315	SV-06L	6	12 x 1.5	14	34	7	27	22	42	17	17	14
		SV-08L	8	14 x 1.5	15	34	8	27	23	42	19	19	17
		SV-10L	10	16 x 1.5	17	35	10	28	25	43	22	22	19
		SV-12L	12	18 x 1.5	17	36	10	29	25	44	24	24	22
		SV-15L	15	22 x 1.5	19	38	12	31	27	46	27	30	27
		SV-18L	18	26 x 1.5	21	40	13.5	32.5	30	49	32	36	32
	160	SV-22L	22	30 x 2	24	42	16.5	34.5	33	51	36	41	36
		SV-28L	28	36 x 2	26	43	18.5	35.5	35	52	41	46	41
		SV-35L †	35	45 x 2	29	47	18.5	36.6	40	58	50	55	50
		SV-42L	42	52 x 2	30	47	19	36	42	59	60	65	60
S	630	SV-06S	6	14 x 1.5	19	36	12	29	27	44	19	19	17
		SV-08S	8	16 x 1.5	20	36	13	29	28	44	22	22	19
		SV-10S	10	18 x 1.5	22	37	14.5	29.5	31	46	24	24	22
		SV-12S	12	20 x 1.5	22	38	14.5	30.5	31	47	27	27	24
		SV-14S	14	22 x 1.5	25	40	17	32	35	50	30	30	27
	400	SV-16S	16	24 x 1.5	25	40	16.5	31.5	35	50	32	32	30
		SV-20S	20	30 x 2	28	44	17.5	33.5	39	55	41	41	36
		SV-25S	25	36 x 2	32	47	20	35	44	59	46	46	46
		SV-30S	30	42 x 2	35	51	21.5	37.5	48	64	50	50	50
	315	SV-38S	38	52 x 2	38	53	22	37	53	68	65	65	60

† Indent Item, available on request

PIRTEK

This page is part of a complete catalogue containing technical and safety data.
All data must be reviewed when selecting a product.
Pirtek reserve the right to change technical specifications without notice

AS Welding Boss

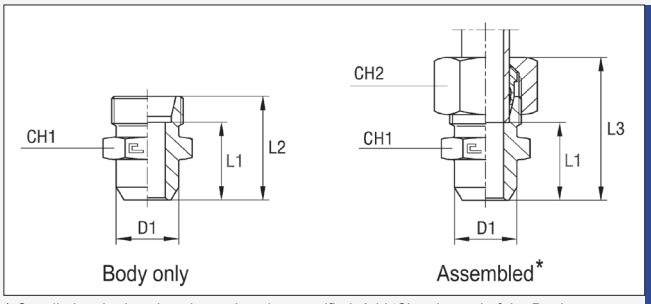

* Supplied as body only unless otherwise specified. Add 'C' to the end of the Product Code if a Nut and Cutting Ring are required. eg AS-18LC

Series	Max. W.P. Bar	Product Code (Body only)	Dimensions mm						
			ø Tube	D1	L1	L2	L3	CH1	CH2
L	315	AS-06L †	6	10	14	21	29	12	14
		AS-08L	8	12	16	23	31	14	17
		AS-10L †	10	14	18	25	33	17	19
		AS-12L †	12	16	18	25	33	19	22
		AS-15L †	15	19	22	29	37	22	27
		AS-18L	18	22	23.5	31	40	27	32
	160	AS-22L †	22	27	28.5	36	45	32	36
		AS-28L †	28	32	30.5	38	47	41	41
		AS-35L †	35	40	32.5	43	54	46	50
		AS-42L †	42	46	35	46	58	55	60
S	630	AS-06S	6	11	19	26	34	14	17
		AS-08S	8	13	21	28	36	17	19
		AS-10S	10	15	22.5	30	39	19	22
		AS-12S	12	17	24.5	32	41	22	24
		AS-14S †	14	19	27	35	45	24	27
	400	AS-16S	16	21	26.5	35	45	27	30
		AS-20S	20	26	29.5	40	51	32	36
		AS-25S	25	31	32	44	56	41	46
		AS-30S	30	36	35.5	49	62	46	50
	315	AS-38S	38	44	38	54	69	55	60

† Non-Stocked item, availble on request

SKA Welding Nipple

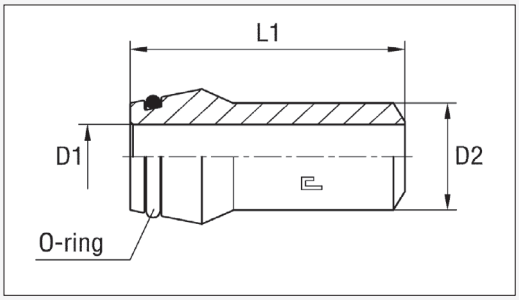

* Supplied disassembled

Series	Max. W.P. bar	Product Code (Nipple only)	Dimensions mm				
			Ø x Wall Thickness	ø Tube	D1	D2	L1
L / S	-	SKA6x1 †	6x1	6	-	-	-
	630	SKA6x1.75 †	6x1.75	6	2.5	6	31
		SKA8x1.5 †	8x1.5	8	-	-	-
	630	SKA8x2 †	8x2	8	4	8	31
	315	SKA10X1.5 †	10X1.5	10	7	10	32.5
	315	SKA12X1.5 †	12X1.5	12	9	12	32.5
	-	SKA18x2 †	18x2	18	-	-	-
	-	SKA22x2 †	22x2	22	-	-	-
L	-	SKA15x1.5 †	15x1.5	15	-	-	-
	315	SKA15x2.5 †	15x2.5	15	10	15	34
	315	SKA18x2.5 †	18x2.5	18	13	18	35.5
	160	SKA22x2.5 †	22x2.5	22	17	22	38.5
	160	SKA28X2.5 †	28X2.5	28	23	28	41.5
	160	SKA35X3 †	35X3	35	29	35	47.5
S	-	SKA14X2 †	14X2	14	-	-	-
	400	SKA14X3 †	14X3	14	8	14	38.5
	250	SKA16X2	16X2	16	12	16	39
	250	SKA20X2.5	20X2.5	20	15	20	45
	315	SKA20X3 †	20X3	20	14	20	45
	-	SKA25X2.5 †	25X2.5	25	-	-	-
	250	SKA25X3 †	25X3	25	19	25	49.5
	160	SKA30X3	30X3	30	24	30	52
	250	SKA38X5 †	38X5	38	-	-	-
	315	SKA38X6 †	38X6	38	26	38	56.5

† Non-Stocked item, availble on request

PIRTEK

This page is part of a complete catalogue containing technical and safety data.
All data must be reviewed when selecting a product.
Pirtek reserve the right to change technical specifications without notice

RI Reducing Coupling BSPP

Elastomeric Seal

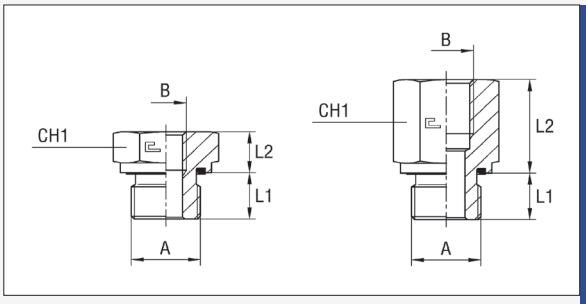

Max. W.P. bar	Product Code	Schematic Left	Schematic Right	A	B	L1	L2	CH1
400	RI-02-04		*	1/8	1/4	8	23	19
	RI-02-06		*	1/8	3/8	8	24	24
	RI-04-02		*	1/4	1/8	12	16	19
	RI-04-04		*	1/4	1/4	11.8	21.7	19
	RI-04-06		*	1/4	3/8	12	24	24
	RI-04-08		*	1/4	1/2	12	28	30
	RI-04-12		*	1/4	3/4	12	31	36
	RI-06-02			3/8	1/8	12	10.5	22
	RI-06-04		*	3/8	1/4	12	24	22
	RI-06-06		*	3/8	3/8	11.8	25.7	22
	RI-06-08		*	3/8	1/2	12	29	30
315	RI-06-12		*	3/8	3/4	12	32	36
400	RI-08-02 †	*		1/2	1/8	14	10	27
	RI-08-04	*		1/2	1/4	14	10	27
	RI-08-06		*	1/2	3/8	14	22	27
	RI-08-08		*	1/2	1/2	13.6	32.4	27
315	RI-08-12		*	1/2	3/4	14	32	36
	RI-08-16		*	1/2	1	14	35	41
	RI-08-20		*	1/2	1.1/4	14	39	55
	RI-12-04	*		3/4	1/4	16	10	32
	RI-12-06	*		3/4	3/8	16	10	32
	RI-12-08		*	3/4	1/2	16	26	32
	RI-12-12		*	3/4	3/4	15.9	32.2	36
	RI-12-16		*	3/4	1	16	35	41
	RI-12-20		*	3/4	1.1/4	16	39	55
250	RI-12-24		*	3/4	1/1/2	16	41	60
315	RI-16-04	*		1	1/4	18	11	41
	RI-16-06	*		1	3/8	18	11	41
	RI-16-08	*		1	1/2	18	11	41
	RI-16-12		*	1	3/4	18	29	41
	RI-16-20		*	1	1.1/4	18	39	55
250	RI-16-24		*	1	1.1/2	18	41	60
315	RI-20-08	*		1.1/4	1/2	20	12	50
	RI-20-12	*		1.1/4	3/4	20	12	50
	RI-20-16		*	1.1/4	1	20	31	50
250	RI-20-24		*	1.1/4	1.1/2	20	40	60
	RI-24-08	*		1.1/2	1/2	22	14	55
	RI-24-12	*		1.1/2	3/4	22	14	55
	RI-24-16-	*		1.1/2	1	22	14	55
	RI-24-20		*	1.1/2	1.1/4	22	46	50

† Indent Item, available on

PIRTEK
This page is part of a complete catalogue containing technical and safety data.
All data must be reviewed when selecting a product.
Pirtek reserve the right to change technical specifications without notice

THIS PAGE IS INTENTIONALLY LEFT BLANK

PIRTEK
This page is part of a complete catalogue containing technical and safety data.
All data must be reviewed when selecting a product.
Pirtek reserve the right to change technical specifications without notice

EVGE Male Stud Coupling with Swivel Nut - Metric / BSPP
Elastomer Seal (ED)

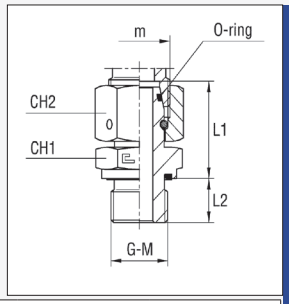

METRIC

Series	Max. W.P. bar	Product Code (Body only)	Dimensions mm						
			ø Tube	m	M	L1	L2	CH1	CH2
L	315	EVGE-06LM12x1.5ED †	6	12 x 1.5	10 x 1	24.5	8	14	14
		EVGE-08LM14x1.5ED †	8	14 x 1.5	12 x 1.5	26.5	12	17	17
		EVGE-10LM14x1.5ED	10	16 x 1.5	14 x 1.5	27.5	12	19	19
		EVGE-10LM16x1.5ED †	10	16 x 1.5	16 x 1.5	27.5	12	19	19
		EVGE-12LM18x1.5ED †	12	18 x 1.5	16 x 1.5	30.5	12	22	22
		EVGE-15LM22x1.5ED †	15	22 x 1.5	18 x 1.5	31.5	12	24	27
		EVGE-18LM26x1.5ED †	18	26 x 1.5	22 x 1.5	31.5	14	27	32
	160	EVGE-22LM30x2ED †	22	30 x 2	26 x 1.5	32.5	16	32	36
		EVGE-28LM36x2ED †	28	36 x 2	33 x 2	35	18	41	41
		EVGE-35LM45x2ED †	35	45 x 2	42 x 2	42.5	20	50	50
		EVGE-42LM52x2ED †	42	52 x 2	48 x 2	46.5	22	55	60
S	630	EVGE-06SM14x1.5ED †	6	14 x 1.5	12 x 1.5	27	12	17	17
		EVGE-08SM16x1.5ED †	8	16 x 1.5	14 x 1.5	29.5	12	19	19
		EVGE-10SM18x1.5ED †	10	18 x 1.5	16 x 1.5	32	12	22	22
		EVGE-12SM20x1.5ED †	12	20 x 1.5	18 x 1.5	34	12	24	24
		EVGE-14SM22x1.5ED †	14	22 x 1.5	20 x 1.5	36.5	14	27	27
	400	EVGE-16SM24x1.5ED †	16	24 x 1.5	22 x 1.5	37	14	27	30
		EVGE-20SM30x2ED †	20	30 x 2	27 x 2	43	16	32	36
		EVGE-25SM36x2ED †	25	36 x 2	33 x 2	48	18	41	46
		EVGE-30SM42x2ED †	30	42 x 2	42 x 2	51	20	50	50

† Non-Stocked item, availble on request

BSPP

Series	Max. W.P. bar	Product Code (Body only)	Dimensions mm (except G)						
			ø Tube	m	G (ins)	L1	L2	CH1	CH2
L	500	EVGE-06LR1/8ED	6	12 x 1.5	1/8	24.5	8	14	14
		EVGE-08LR1/4ED	8	14 x 1.5	1/4	29.5	12	19	17
		EVGE-10LR1/4ED	10	16 x 1.5	1/4	27.5	12	19	19
	400	EVGE-10LR3/8ED	10	16 x 1.5	3/8	29	12	22	10
		EVGE-12LR1/4ED	12	18 x 1.5	1/4	27.5	12	19	22
		EVGE-12LR3/8ED	12	18 x 1.5	3/8	34	12	22	22
		EVGE-12LR1/2ED	12	18 x 1.5	1/2	30	14	27	22
		EVGE-15LR3/8ED	15	22 x 1.5	3/8	31.5	12	22	27
		EVGE-15LR1/2ED	15	22 x 1.5	1/2	32	14	27	27
		EVGE-18LR1/2ED	18	26 x 1.5	1/2	31.5	14	27	32
	250	EVGE-22LR3/4ED	22	30 x 2	3/4	32.5	16	32	36
		EVGE-28LR1ED	28	36 x 2	1	35	18	41	41
		EVGE-35LR11/4ED	35	45 x 2	1.1/4	42.5	20	50	50
		EVGE-42LR11/2ED	42	52 x 2	1.1/2	46.5	22	55	60
S	800	EVGE-06SR1/4ED	6	14 x 1.5	1/4	27	12	19	17
		EVGE-08SR1/4ED	8	16 x 1.5	1/4	29.5	12	19	19
		EVGE-10SR3/8ED	10	18 x 1.5	3/8	32	12	22	22
	630	EVGE-12SR3/8ED	12	20 x 1.5	3/8	34	12	22	24
		EVGE-12SR1/2ED	12	20 x 1.5	1/2	34	14	27	24
		EVGE-14SR1/2ED	14	22 x 1.5	1/2	36.5	14	27	27
		EVGE-16SR1/2ED	16	24 x 1.5	1/2	37	14	27	30
	420	EVGE-20SR3/4ED	20	30 x 2	3/4	43	16	32	36
		EVGE-25SR1ED	25	36 x 2	1	48	18	41	46
		EVGE-30SR11/4ED	30	42 x 2	1.1/4	51	20	50	50
		EVGE-38SR11/2ED	38	52 x 2	1.1/2	60	22	55	60

PIRTEK
This page is part of a complete catalogue containing technical and safety data.
All data must be reviewed when selecting a product.
Pirtek reserve the right to change technical specifications without notice

KOR Standpipe Tube Reducer
L Series

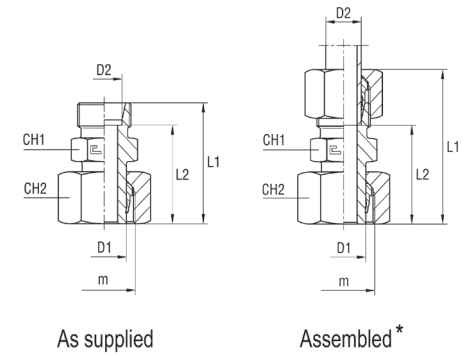

* Supplied as body only unless otherwise specified. Add 'C' to the end of the Product Code if a Nut and Cutting Ring are required. eg KOR-15L/06LC

Series	Max. W.P. bar	Product Code (Body only)	ø Tube		Dimensions mm				
			D1	D2	m	L1	L2	CH1	CH2
L	315	KOR-08L/06L	8	6	14 x 1.5	32.5	25.5	12	17
		KOR-10L/06L	10	6	16 x 1.5	33	26	12	19
		KOR-12L/06L	12	6	18 x 1.5	34	27	14	22
		KOR-15L/06L	15	6	22 x 1.5	34	27	17	27
		KOR-18L/06L †	18	6	26 x 1.5	36.5	29.5	19	32
	160	KOR-22L/06L †	22	6	30 x 2	37.5	30.5	24	36
		KOR-28L/06L †	28	6	36 x 2	39	32	30	41
		KOR-35L/06L †	35	6	45 x 2	45.5	38.5	36	50
		KOR-42L/06L †	42	6	52 x 2	46.5	39.5	46	60
	315	KOR-10L/08L	10	8	16 x 1.5	34	27	14	19
		KOR-12L/08L	12	8	18 x 1.5	34	27	14	22
		KOR-15L/08L	15	8	22 x 1.5	34	27	17	27
		KOR-18L/08L	18	8	26 x 1.5	36.5	29.5	19	32
	160	KOR-22L/08L †	22	8	30 x 2	37.5	30.5	34	36
		KOR-28L/08L †	28	8	36 x 2	39	32	30	41
		KOR-35L/08L †	35	8	45 x 2	45.5	38.5	36	50
		KOR-42L/08L †	42	8	52 x 2	46.5	39.5	46	60
	315	KOR-12L/10L	12	10	18 x 1.5	35	28	17	22
		KOR-15L/10L	15	10	22 x 1.5	35	28	17	27
		KOR-18L/10L	18	10	26 x 1.5	37.5	30.5	19	32
	160	KOR-22L/10L	22	10	30 x 2	38.5	31.5	24	36
		KOR-28L/10L †	28	10	36 x 2	40	33	30	41
		KOR-35L/10L †	35	10	45 x 2	46.5	39.5	36	50
		KOR-42L/10L †	42	10	52 x 2	47.5	40.5	46	60
	315	KOR-15L/12L	15	12	22 x 1.5	36	29	19	27
		KOR-18L/12L	18	12	26 x 1.5	37.5	30.5	19	32
	160	KOR-22L/12L	22	12	30 x 2	38.5	31.5	24	36
		KOR-28L/12L	28	12	36 x 2	40	33	30	41
		KOR-35L/12L †	35	12	45 x 2	46.5	39.5	36	50
		KOR-42L/12L †	42	12	52 x 2	47.5	40.5	46	60
	315	KOR-18L/15L	18	15	26 x 1.5	38.5	31.5	24	32
	160	KOR-22L/15L	22	15	30 x 2	39.5	32.5	24	36
		KOR-28L/15L	28	15	36 x 2	41	34	30	41
		KOR-35L/15L	35	15	45 x 2	47.5	40.5	36	50
		KOR-42L/15L †	42	15	52 x 2	48.5	41.5	46	60
		KOR-22L/18L	22	18	30 x 2	40	32.5	27	36
		KOR-28L/18L	28	18	36 x 2	41	33.5	30	41
		KOR-35L/18L	35	18	45 x 2	47.5	40	36	50
		KOR-42L/18L	42	18	52 x 2	48.5	41	46	60
		KOR-28L/22L	28	22	36 x 2	43	35.5	32	41
		KOR-35L/22L	35	22	45 x 2	49.5	42	36	50
		KOR-42L/22L	42	22	52 x 2	50.5	43	46	60
		KOR-35L/28L	35	28	45 x 2	49.5	42	41	50
		KOR-42L/28L	42	28	52 x 2	50.5	43	46	60
		KOR-42L/35L	42	35	52 x 2	52.5	42	46	60

† Indent Item, available on request

PIRTEK
This page is part of a complete catalogue containing technical and safety data.
All data must be reviewed when selecting a product.
Pirtek reserve the right to change technical specifications without notice

KOR Standpipe Tube Reducer
S Series

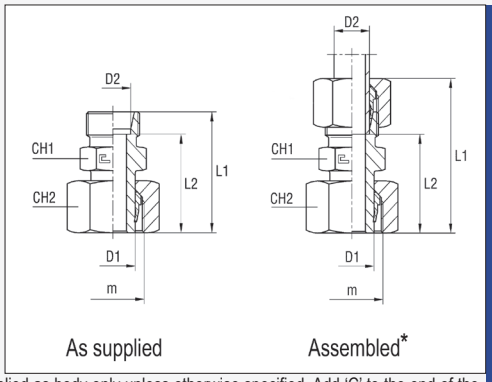

* Supplied as body only unless otherwise specified. Add 'C' to the end of the Product Code if a Nut and Cutting Ring are required. eg KOR-16S/06SC

Series	Max. W.P. bar	Product Code (Body only)	ø Tube		Dimensions mm				
			D1	D2	m	L1	L2	CH1	CH2
S	630	KOR-08S/06S	8	6	14 x 1.5				
		KOR-10S/06S	10	6	18 x 1.5				
		KOR-12S/06S †	12	6	20 x 1.5	38	31	14	24
		KOR-14S/06S	14	6	22 x 1.5	42	35	17	27
	400	KOR-16S/06S †	16	6	24 x 1.5	43	36	17	30
		KOR-20S/06S †	20	6	30 x 2	48.5	41.5	22	36
		KOR-25S/06S †	25	6	36 x 2	51	44	27	46
		KOR-30S/06S †	30	6	42 x 2	55.5	48.5	32	50
	315	KOR-38S/06S †	38	6	52 x 2	61.5	54	41	60
	630	KOR-10S/08S	10	8	18 x 1.5	40.5	33.5	17	22
		KOR-12S/08S	12	8	20 x 1.5	40	33	17	24
		KOR-14S/08S	14	8	22 x 1.5	42	35	17	27
	400	KOR-16S/08S	16	8	24 x 1.5	43	36	17	30
		KOR-20S/08S	20	8	30 x 2	48.5	41	22	36
		KOR-25S/08S †	25	8	36 x 2	51	44	27	46
		KOR-30S/08S †	30	8	42 x 2	55.5	48.5	32	50
	315	KOR-38S/08S †	38	8	52 x 2	61.5	54.5	41	60
	630	KOR-12S/10S	12	10	20 x 1.5	40	32.5	19	24
		KOR-14S/10S	14	10	22 x 1.5	42	34.5	19	27
	400	KOR-16S/10S	16	10	24 x 1.5	43	35.5	19	30
		KOR-20S/10S	20	10	30 x 2	48.5	41	22	36
		KOR-25S/10S †	25	10	36 x 2	51	43.5	27	46
	250	KOR-30S/10S †	30	10	42 x 2	55.5	48	32	50
		KOR-38S/10S †	38	10	52 x 2	61.5	54	41	60
	630	KOR-14S/12S	14	12	22 x 1.5	44	36.5	22	27
	400	KOR-16S/12S	16	12	24 x 1.5	45	37.5	22	30
		KOR-20S/12S	20	12	30 x 2	48.5	41	22	36
		KOR-25S/12S †	25	12	36 x 2	51	43.5	27	46
		KOR-30S/12S	30	12	42 x 2	55.5	48	32	50
	315	KOR-38S/12S †	38	12	52 x 2	61.5	54	41	60
	400	KOR-16S/14S	16	14	24 x 1.5	47	39	24	30
		KOR-20S/14S	20	14	30 x 2	50.5	42.5	24	36
		KOR-25S/14S	25	14	36 x 2	53	45	27	46
	250	KOR-30S/14S	30	14	42 x 2	57.5	49.5	32	50
		KOR-38S/14S †	38	14	52 x 2	63.5	55.5	41	60
	400	KOR-20S/16S	20	16	30 x 2	50.5	42	27	36
		KOR-25S/16S	25	16	36 x 2	53	44.5	27	46
		KOR-30S/16S	30	16	42 x 2	57.5	49	32	50
	315	KOR-38S/16S †	38	16	52 x 2	63.5	55	41	60
	400	KOR-25S/20S	25	20	36 x 2	57	46.5	32	46
		KOR-30S/20S	30	20	42 x 2	59.5	49	32	50
		KOR-38S/20S	38	20	52 x 2	65.5	55	41	60
		KOR-30S/25S	30	25	42 x 2	63.5	51.5	41	50
	315	KOR-38S/25S	38	25	52 x 2	67.5	55.5	41	60
		KOR-38S/30S	38	30	52 x 2	69.5	56	46	60

† Indent Item, available on request

PIRTEK
This page is part of a complete catalogue containing technical and safety data.
All data must be reviewed when selecting a product.
Pirtek reserve the right to change technical specifications without notice

VSTIR Socket Head Port Plug - BSPP
Elastomer Seal (ED)

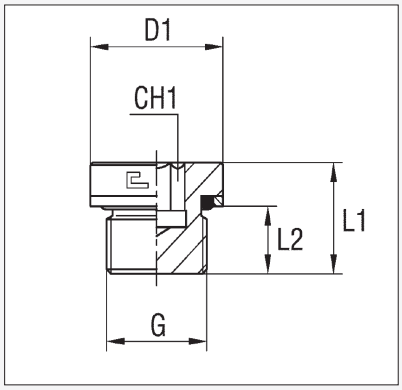

Series	Max. W.P. bar	Product Code	Dimensions mm				
			G	D1	L1	L2	CH1
S	400	VSTIR-1/8	1/8	14	12	8	5
		VSTIR-1/4	1/4	19	17	12	6
		VSTIR-3/8	3/8	22	17	12	8
		VSTIR-1/2	1/2	27	19	14	10
		VSTIR-3/4	3/4	32	21	16	12
		VSTIR-1	1	40	22.5	16	17
	250	VSTIR-11/4	1.1/4	50	22.5	16	22
		VSTIR-11/2	1.1/2	55	22.5	16	24

VSTI Socket Head Port Plug - Metric
Elastomer Seal (ED)

*For metric Port Plug with magnet add MG to part number, eg. VSTIMG-18x1.5
Replaces Oil Sump Drain Plugs to attract unwanted tiny metal particles that the Oil Filter does not pick up

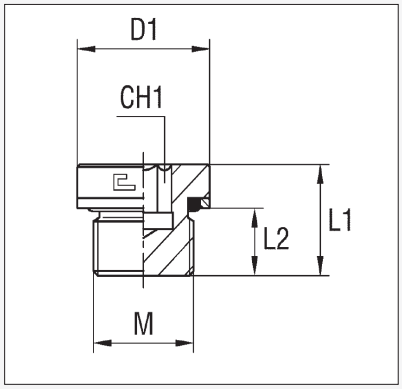

Series	Max. W.P. bar	Product Code	Dimensions mm				
			M	D1	L1	L2	CH1
S	400	VSTI-10x1	10 x 1	14	12	8	5
		VSTI-12x1.5	12 x 1.5	17	17	12	6
		VSTI-14x1.5	14 x 1.5	19	17	12	6
		VSTI-16x1.5	16 x 1.5	22	17	12	8
		VSTI-18x1.5	18 x 1.5	24	17	12	8
		VSTI-20x1.5	20 x 1.5	26	19	14	10
		VSTI-22x1.5	22 x 1.5	27	19	14	10
		VSTI-24x1.5	24x1.5	29	20	15	12
		VSTI-26x1.5	26 x 1.5	32	21	16	12
		VSTI-27x2.0	27 x 2	32	21	16	12
		VSTI-33x2.0	33 x 2	40	22.5	16	17
	250	VSTI-42x2.0	42 x 2	50	22.5	16	22
		VSTI-48x2.0	48 x 2	55	22.5	16	24

PIRTEK
This page is part of a complete catalogue containing technical and safety data.
All data must be reviewed when selecting a product.
Pirtek reserve the right to change technical specifications without notice

BUZ Blanking Cap
(Tightening nut not included)

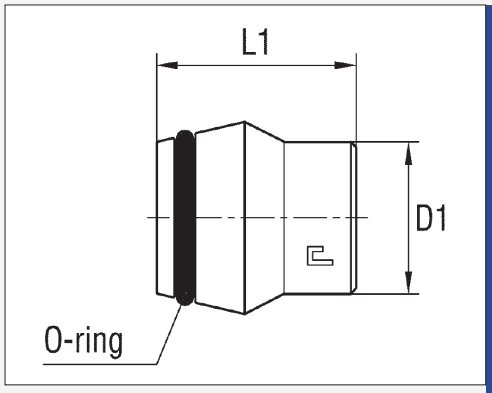

Series	bar	Product Code	Dimensions mm			
			ø Tube	D1	L1	
L	315	BUZ-06L/S	6	6	17	
		BUZ-08L/S	8	8	17	
		BUZ-10L/S	10	10	20	
		BUZ-12L/S	12	12	21	
		BUZ-15L	15	15	21	
		BUZ-18L	18	18	23	
	160	BUZ-22L	22	22	23	
		BUZ-28L	28	28	25	
		BUZ-35L	35	35	29	
		BUZ-42L	42	42	30	
S	630	BUZ-06L/S	6	6	17	
		BUZ-08L/S	8	8	17	
		BUZ-10L/S	10	10	20	
		BUZ-12L/S	12	12	21	
		BUZ-14S	14	14	23	
	400	BUZ-16S	16	16	24	
		BUZ-20S	20	20	28	
		BUZ-25S	25	25	31	
		BUZ-30S	30	30	34	
	315	BUZ-38S	38	38	38	

ROV Blanking Plug for Tube Ends (Standpipe End Plug)

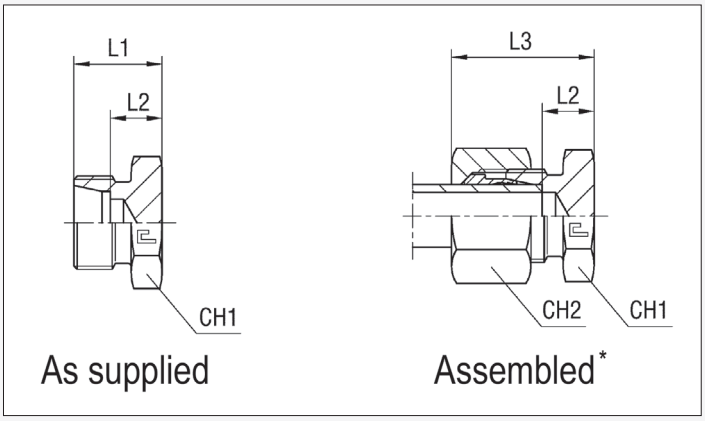

* Supplied as body only unless otherwise specified. Add 'C' to the end of the Product Code if a Nut and Cutting Ring are required. eg ROV-12LC

Series	Max. W.P. bar	Product Code (Plug only)	Dimensions mm					
			ø Tube	L1	L2	L3	CH1	CH2
L	315	ROV-06L	6	14	7	21.5	12	14
		ROV-08L	8	15	8	23	14	17
		ROV-10L	10	16	9	24	17	19
		ROV-12L	12	17	10	24.5	19	22
		ROV-15L	15	18	11	26	24	27
		ROV-18L	18	19	11.5	28	27	32
	160	ROV-22L	22	21	13.5	30	32	36
		ROV-28L	28	22	14.5	31	41	41
		ROV-35L	35	25	14.5	36	46	50
		ROV-42L	42	27	16	39	55	60
S	630	ROV-06S	6	18	11	26	14	17
		ROV-08S	8	20	13	28	17	19
		ROV-10S	10	20	12.5	28.5	19	22
		ROV-12S	12	22	14.5	30.5	22	24
		ROV-14S	14	24	16	34	24	27
	400	ROV-16S	16	24	15.5	34	27	30
		ROV-20S	20	28	17.5	39	32	36
		ROV-25S	25	32	20	44	41	46
		ROV-30S	30	34	20.5	47	46	50
	315	ROV-38S	38	39	23	54	55	60

PIRTEK

This page is part of a complete catalogue containing technical and safety data.
All data must be reviewed when selecting a product.
Pirtek reserve the right to change technical specifications without notice

GAI Female Stud Coupling
BSPP Thread

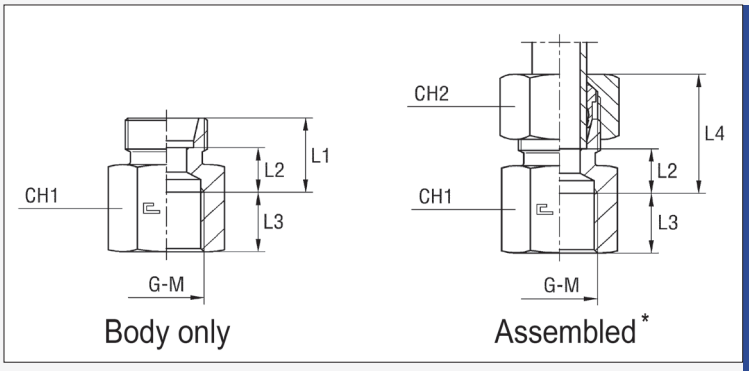

* Supplied as body only unless otherwise specified. Add 'C' to the end of the Product Code if a Nut and Cutting Ring are required. eg GAI-15LR1/2C

Series	Max. W.P. bar	Product Code (Body only)	Dimensions mm							
			ø Tube	G	L1	L2	L3	L4	CH1	CH2
L	315	GAI-06LR1/8	6	1/8	16	9	10	23.5	14	14
		GAI-08LR1/4	8	1/4	17	10	14	25	19	17
		GAI-10LR1/4	10	1/4	18	11	14	26	19	19
		GAI-12LR3/8	12	3/8	19	12	14	26.5	24	22
		GAI-15LR1/2	15	1/4	21	14	17	29	27	27
		GAI-18LR1/2	18	1/2	21	13.5	17	30	27	32
	160	GAI-22LR3/4	22	3/4	24	16.5	19	33	36	36
		GAI-28LR1	28	1	23.5	16	21.5	32.5	41	41
		GAI-35LR11/4	35	1.1/4	28.5	18	23.5	39.5	55	50
		GAI-42LR11/2	42	1.1/2	28.5	17.5	25.5	40.5	60	60
S	630	GAI-06SR1/4	6	1/4	19	12	14	27	19	17
		GAI-08SR1/4	8	1/4	19	12	14	27	19	19
		GAI-10SR3/8	10	3/8	20	12.5	14	28.5	24	22
		GAI-12SR3/8	12	3/8	20	12.5	14	28.5	24	24
		GAI-14SR1/2	14	1/2	23	15	17	33	30	27
	400	GAI-16SR1/2	16	1/2	23	14.5	17	33	30	30
		GAI-20SR3/4	20	3/4	26	15.5	19	37	36	36
		GAI-25SR1	25	1	27.5	15.5	21.5	39.5	41	46
		GAI-30SR11/4	30	1.1/4	32.5	19	23.5	45.5	55	50
	315	GAI-38SR11/2	38	1.1/2	34.5	18.5	25.53	49.5	60	60

MAV Gauge Coupling Male Metric

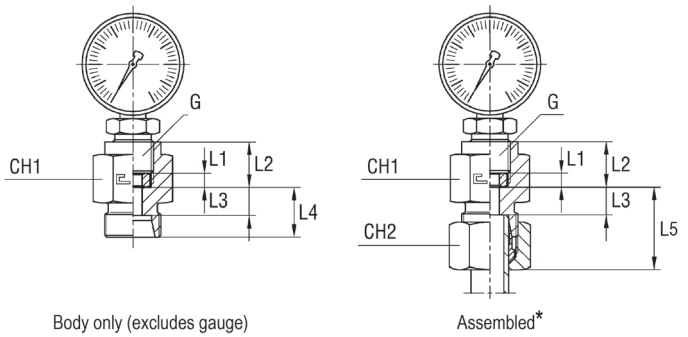

* Supplied as body only unless otherwise specified. Add 'C' to the end of the Product Code if a Nut and Cutting Ring are required. eg MAV-12LR1/4C

Series	Max. W.P. bar	Product Code (Body only)	Dimensions mm								
			ø Tube	G	L1	L2	L3	L4	L5	CH1	CH2
L	315	MAV-06LR1/4	6	1/4	4.5	14.5	7.5	14.5	22.5	19	14
		MAV-08LR1/4†	8	1/4	4.5	14.5	7.5	14.5	22.5	19	17
		MAV-10LR1/4	10	1/4	4.5	14.5	8.5	15.5	23.5	19	19
		MAV-12LR1/4	12	1/4	4.5	14.5	8.5	15.5	23.5	19	0.22
S	630	MAV-06SR1/2	6	1/2	5	20	11	18	26	30	17
		MAV-08SR1/2	8	1/2	5	20	11	18	26	30	19
		MAV-10SR1/2 †	10	1/2	5	20	10.5	18	26.5	30	22
		MAV-12SR1/2	12	1/2	5	20	10.5	18	26.5	30	24

† Non-Stocked item, availble on request

MAVE Gauge Coupling Female Metric

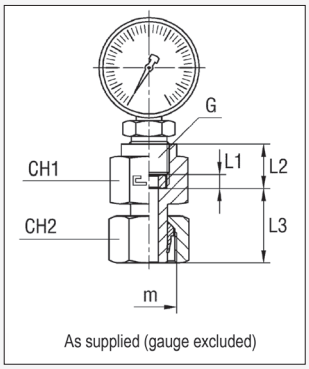

Series	Max. W.P. bar	Product Code	Dimensions mm								
			ø Tube	G	m	L1	L2	L3	CH1	CH2	
L	315	MAVE-06LR1/4 †	6	1/4	12 x 1.5	4.5	14.5	23.5	19	14	
		MAVE-08LR1/4 †	8	1/4	14 x 1.5	4.5	14.5	25	19	17	
		MAVE-10LR1/4 †	10	1/4	16 x 1.5	4.5	14.5	25	19	19	
		MAVE-12LR1/4 †	12	1/4	18 x 1.5	4.5	14.5	26.5	19	22	
S	630	MAVE-06SR1/2 †	6	1/2	14 x 1.5	5	20	25	30	17	
		MAVE-08SR1/2 †	8	1/2	16 x 1.5	5	20	25.5	30	19	
		MAVE-10SR1/2 †	10	1/2	18 x 1.5	5	20	27.5	30	22	
		MAVE-12SR1/2 †	12	1/2	20 x 1.5	5	20	27.5	30	24	

† Non-Stocked item, availble on request

PIRTEK
This page is part of a complete catalogue containing technical and safety data.
All data must be reviewed when selecting a product.
Pirtek reserve the right to change technical specifications without notice

NRV Non Return Valve
Male Metric Coupling

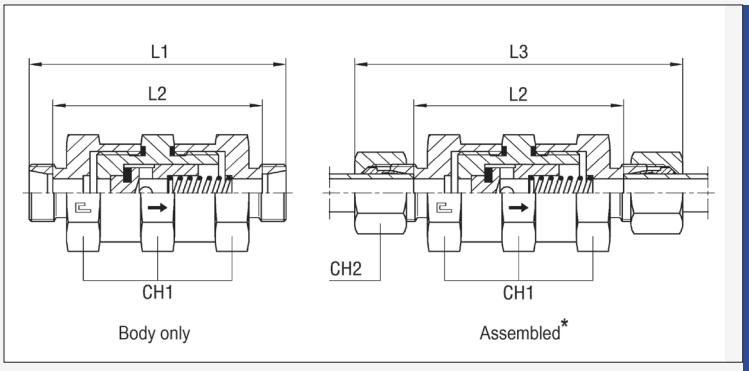

* Supplied as body only unless otherwise specified. Add 'C' to the end of the Product Code if Nuts and Cutting Rings are required. eg NRV-18LC

Series	bar	Product Code (Body only)	Dimensions mm						
			ø Tube	L1	L2	L3	CH1	CH2	ø passage
L	250	NRV-06L	6	68	54	83	19	14	4
		NRV-08L †	8	68	54	83	19	17	4
		NRV-10L †	10	70	56	85	19	19	4
		NRV-12L †	12	76	62	91	32	22	8
		NRV-15L	15	81	67	97	41	27	11
	160	NRV-18L	18	81	66	98	41	32	11
		NRV-22L †	22	94	79	111	50	36	18
	100	NRV-28L †	28	94	79	112	50	41	18
		NRV-35L †	35	116	95	138	70	50	29
		NRV-42L †	42	116	94	139	70	60	29
S	400	NRV-06S †	6	72	58	87	19	17	4
		NRV-08S †	8	72	58	87	19	19	4
		NRV-10S †	10	78	63	95	32	22	7
		NRV-12S	12	78	63	95	32	24	8
		NRV-14S †	14	85	69	104	41	27	10
		NRV-16S	16	85	68	104	41	30	11
		NRV-20S	20	98	77	120	50	36	16
	250	NRV-25S †	25	102	78	126	50	46	18
		NRV-30S †	30	124	97	150	70	50	25
		NRV-38S †	38	128	96	157	70	60	29

† Non-Stocked item, availble on request

ELASTOMER SEAL DIN 3869

SUITS BSP PARALLEL & METRIC PARALLEL ENCAPSULATED THREADS

ED = NBR 85 DuroA Temperature range: -30ºC to 100ºC

ED-V = Viton®(FKM) 80 DuroA Temperature range: -20ºC to 200ºC

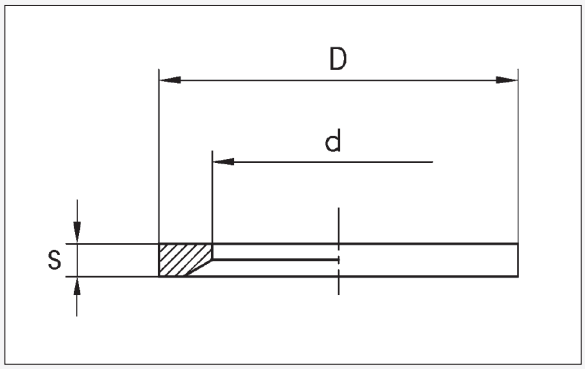

Product Code		Interchange	Dimensions (mm)				
NBR	Viton®		Metric	BSPP	D	d	s
ED-02/10M		*	10X1	1/8	11.9	8.4	1
ED-04/14M	ED-V-04/14M	*	14X1.5	1/4	16.5	11.6	1.5
ED-06	ED-V-06			3/8	18.9	14.7	1.5
ED-08	ED-V-08			1/2	23.9	18.5	1.5
ED-08M			8X1		9.9	6.5	1
ED-12/26M/27M	ED-V-12/26M/27M	*	26X1.5 - 27X2	3/4	29.2	23.9	1.5
ED-12M			12X1.5		14.4	9.8	1.5
ED-16/33M	ED-V-16/33M	*	33X2	1	35.7	29.7	2
ED-16M			16X1.5		18.9	13.8	1.5
ED-18M			18X1.5		20.9	15.7	1.5
ED-20/42M	ED-V-20/42M	*	42X2	1.1/4	45.8	38.8	2
ED-20M			20X1.5		22.9	17.8	1.5
ED-22M			22X1.5		24.3	19.6	1.5
ED-24/48M	ED-V-24/48M	*	48X2	1.1/2	50.7	44.7	2
ED-32				2	66.1	56.5	4

PIRTEK

This page is part of a complete catalogue containing technical and safety data.
All data must be reviewed when selecting a product.
Pirtek reserve the right to change technical specifications without notice

THIS PAGE IS INTENTIONALLY LEFT BLANK

WE Male Stud Elbow Coupling - NPT

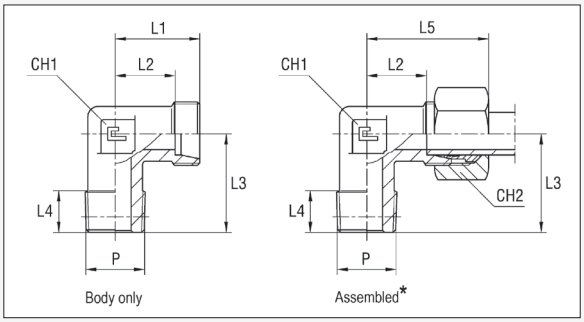

* Supplied as body only unless otherwise specified. Add 'C' to the end of the Product Code if a Nut and Cutting Ring are required. eg WE-12L3/8NPTC

Series	Max. W.P. bar	Product Code (Body only)	Dimensions mm								
			ø Tube	P	L1	L2	L3	L4	L5	CH1	CH2
LL	100	WE-04LL1/8NPT †	4	1/8	15	11	17	8	21	9	10
		WE-06LL1/8NPT †	6	1/8	15	9.5	17	8	21	9	12
		WE-08LL1/8NPT †	8	1/8	17	11.5	20	8	23	12	14
L	315	WE-06L1/8NPT	6	1/8	19	12	20	10	27	12	14
		WE-06L1/4NPT	6	1/4	21	14	26	15	29	12	14
		WE-08L1/4NPT	8	1/4	21	14	26	15	29	12	17
		WE-10L1/4NPT	10	1/4	22	15	27	15	30	14	19
		WE-12L3/8NPT	12	3/8	24	17	28	15	32	17	22
		WE-15L1/2NPT †	15	1/2	28	21	34	19.5	36	19	27
		WE-18L1/2NPT †	18	1/2	31	23.5	36	19.5	40	24	32
	160	WE-22L3/4NPT	22	3/4	35	27.5	42	20	44	27	36
		WE-28L1NPT †	28	1	38	30.5	48	25	47	36	41
		WE-35L11/4NPT †	35	1.1/4	45	34.5	57	25.5	56	41	50
		WE-42L11/2NPT †	42	1.1/2	51	40	61	26	63	50	60
S	630	WE-06S1/4NPT †	6	1/4	23	16	26	15	31	12	17
		WE-08S1/4NPT †	8	1/4	24	17	27	15	32	14	19
		WE-10S3/8NPT †	10	3/8	25	17.5	28	15	34	17	22
		WE-12S3/8NPT †	12	3/8	29	21.5	28	15	38	17	24
		WE-14S1/2NPT †	14	1/2	30	22	34	19.5	40	19	27
	400	WE-16S1/2NPT †	16	1/2	33	24.5	36	19.5	43	24	30
		WE-20S3/4NPT †	20	3/4	37	26.5	42	20	48	27	36
		WE-25S1NPT †	25	1	42	30	48	25	54	36	46
		WE-30S11/4NPT †	30	1.1/4	49	35.5	57	25.5	62	41	50
	315	WE-38S11/2NPT †	38	1.1/2	57	41	61	26	72	50	60

† Non-Stocked item, availble on request

PIRTEK
This page is part of a complete catalogue containing technical and safety data.
All data must be reviewed when selecting a product.
Pirtek reserve the right to change technical specifications without notice

WE Male Stud Elbow Coupling - BSPT

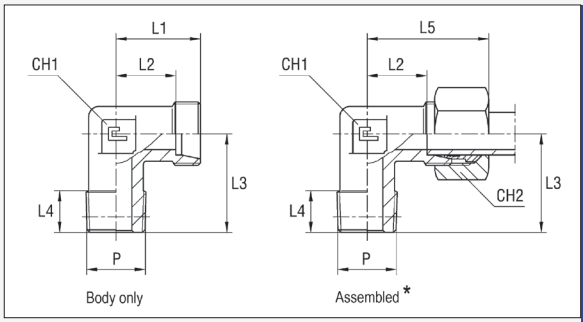

* Supplied as body only unless otherwise specified. Add 'C' to the end of the Product Code if a Nut and Cutting Ring are required. eg WE-10LRK1/4C

Series	Max. W.P. bar	Product Code (Body only)	Dimensions mm								
			ø Tube	P	L1	L2	L3	L4	L5	CH1	CH2
LL	100	WE-04LLRK1/8 †	4	1/8	15	11	17	8	21	9	10
		WE-06LLRK1/8	6	1/8	15	9.5	17	8	21	9	12
		WESW-06LLRK1/8 *	6	1/8	19	13	23	10	24	18	12
		WE-08LLRK1/8 †	8	1/8	17	11.5	20	8	23	12	14
L	315	WE-06LRK1/8	6	1/8	19	12	20	8	27	12	14
		WE-06LRK1/4	6	1/4	21	14	26	12	29	12	14
		WE-08LRK1/4	8	1/4	21	14	26	12	29	12	17
		WE-10LMK14x1.5	10	14x1.5	22	14	27	12			
		WE-10LRK1/4	10	1/4	22	15	27	12	30	14	19
		WE-10LRK3/8	10	3/8	24	17	28	12	32	17	19
		WE-12LRK3/8	12	3/8	24	17	28	12	32	17	22
		WE-12LRK1/2	12	1/2	27	20	34	14	34	19	22
		WE-15LRK1/2	15	1/2	28	21	34	14	36	19	27
		WE-18LRK1/2	18	1/2	31	23.5	36	14	40	24	32
	160	WE-28LRK1	28	1	38	30.5	48	18	47	36	41
S	630	WE-06SRK1/4	6	1/4	23	16	26	12	31	12	17
		WE-08SRK1/4	8	1/4	24	17	27	12	32	14	19
		WE-10SRK3/8	10	3/8	25	17.5	28	12	34	17	22
		WE-12SRK3/8	12	3/8	29	21.5	28	12	38	17	24
		WE-14SRK1/2	14	1/2	30	22	32	14	40	19	27
	400	WE-16SRK1/2	16	1/2	33	24.5	32	14	43	24	30
		WE-20SRK3/4	20	3/4	37	26.5	42	16	48	27	36

† Non-Stocked item, availble on request

* BSPT Swivel

WE Male Stud Elbow Coupling
Metric Taper Thread

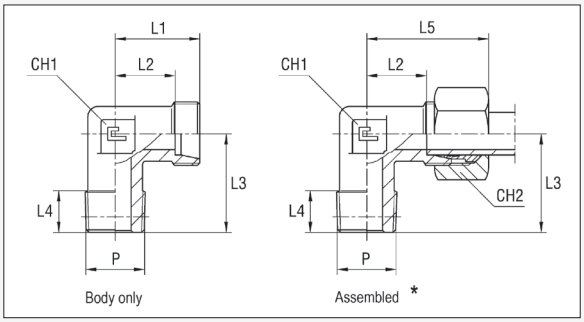

* Supplied as body only unless otherwise specified. Add 'C' to the end of the Product Code if a Nut and Cutting Ring are required. eg WE-10LRK1/4C

Series	Max. W.P. bar	Product Code (Body only)	Dimensions mm								
			ø Tube	P	L1	L2	L3	L4	L5	CH1	CH2
LL	100	WE-06LLMK6x1	6	6 x 1	15	9.5	17	8	21	9	12
		WE-06LLMK8x1	6	8 x 1	15	9.5	17	8	21	9	12

PIRTEK

This page is part of a complete catalogue containing technical and safety data.
All data must be reviewed when selecting a product.
Pirtek reserve the right to change technical specifications without notice

W Equal Elbow Tube Coupling

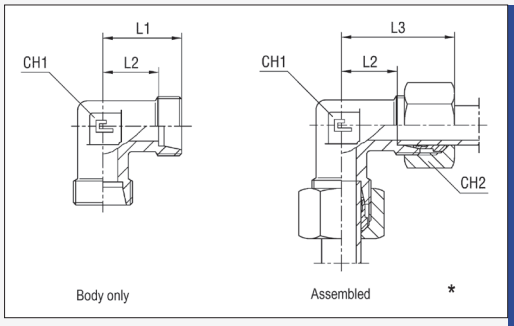

* Supplied as body only unless otherwise specified. Add 'C' to the end of the Product Code if Nuts and Cutting Rings are required. eg W-12LC

Series	Max. W.P. bar	Product Code (Body only)	Dimensions mm					
			ø Tube	L1	L2	L3	CH1	CH2
LL	100	W-04LL †	4	15	11	21	9	10
		W-06LL †	6	15	9.5	21	9	12
		W-08LL †	8	17	11.5	23	12	14
L	315	W-06L	6	19	12	27	12	14
		W-08L	8	21	14	29	12	17
		W-10L	10	22	15	30	14	19
		W-12L	12	24	17	32	17	22
		W-15L	15	28	21	36	19	27
		W-18L	18	31	23.5	40	24	32
		W-22L	22	35	27.5	44	27	36
		W-28L	28	38	30.5	47	36	41
	160	W-35L	35	45	34.5	56	41	50
		W-42L	42	51	40	63	50	60
S	630	W-06S	6	23	16	31	12	17
		W-08S	8	24	17	32	14	19
		W-10S	10	25	17.5	34	17	22
		W-12S	12	29	21.5	38	17	24
	400	W-14S	14	30	22	40	19	27
		W-16S	16	33	24.5	43	24	30
		W-20S	20	37	26.5	48	27	36
		W-25S	25	42	30	54	36	46
		W-30S	30	49	35.5	62	41	50
		W-38S	38	57	41	72	50	60

† Non-Stocked item, availble on request

WSV Bulkhead Elbow Coupling

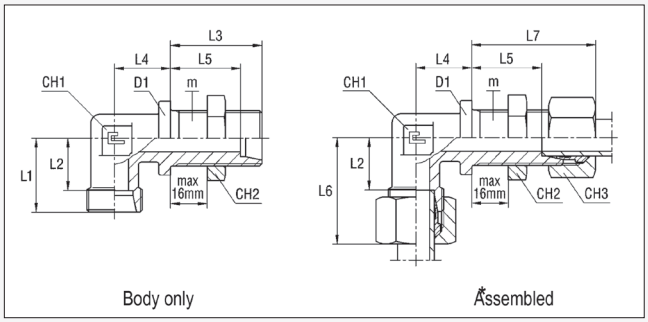

* Supplied as body only unless otherwise specified. Add 'C' to the end of the Product Code if Nuts and Cutting Rings are required. eg WSV-12LC

Series	Max. W.P. bar	Product Code (Body only)	Dimensions mm												
			ø Tube	m	L1	L2	L3	L4	L5	L6	L7	D1	CH1	CH2	CH3
L	315	WSV-06L	6	12 x 1.5	19	12	34	14	27	19	42	17	12	17	14
		WSV-08L	8	14 x 1.5	21	14	34	17	27	21	42	19	12	19	17
		WSV-10L	10	16 x 1.5	22	15	35	18	28	22	43	22	14	22	19
		WSV-12L	12	18 x 1.5	24	17	36	20	29	24	44	24	17	24	22
		WSV-15L	15	22 x 1.5	28	21	38	23	31	28	46	27	19	30	27
		WSV-18L †	18	26 x 1.5	31	23.5	40	24	32.5	31	49	32	24	36	32
	160	WSV-22L	22	30 x 2	35	27.5	42	30	34.5	35	51	36	27	41	36
		WSV-28L †	28	36 x 2	38	30.5	43	34	35.5	38	52	42	36	46	41
		WSV-35L †	35	45 x 2	45	34.5	47	39	36.5	45	58	50	41	55	50
		WSV-42L †	42	52 x 2	51	40	47	43	36	51	59	60	50	65	60
S	630	WSV-06S	6	14 x 1.5	23	16	36	17	29	23	44	19	12	19	17
		WSV-08S	8	16 x 1.5	24	17	36	18	29	24	44	22	14	22	19
		WSV-10S	10	18 x 1.5	25	17.5	37	20	29.5	25	46	24	17	24	22
		WSV-12S	12	20 x 1.5	29	21.5	38	21	30.5	29	47	27	17	27	24
		WSV-14S †	14	22 x 1.5	30	22	40	23	32	30	50	27	19	30	27
	400	WSV-16S	16	24 x 1.5	33	24.5	40	24	31.5	33	50	30	24	32	30
		WSV-20S	20	30 x 2	37	26.5	44	30	33.5	37	55	36	27	41	36
		WSV-25S	25	36 x 2	42	30	47	34	35	42	59	42	36	46	46
		WSV-30S †	30	42 x 2	49	35.5	51	39	37.5	49	64	50	41	50	50
	315	WSV-38S	38	52 x 2	57	41	53	43	37	57	68	60	50	65	60

† Non-Stocked item, availble on request

PIRTEK
This page is part of a complete catalogue containing technical and safety data.
All data must be reviewed when selecting a product.
Pirtek reserve the right to change technical specifications without notice

DSVW Banjo Coupling BSPP

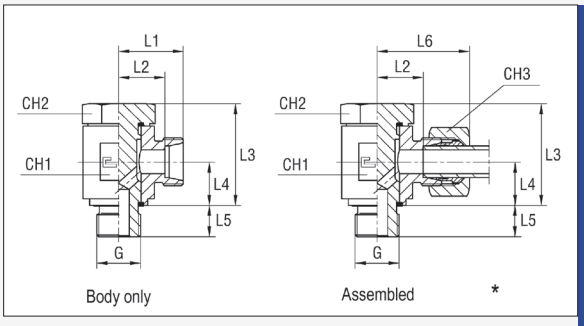

* Supplied as body only unless otherwise specified. Add 'C' to the end of the Product Code if a Nut and Cutting Ring are required. eg DSVW-12LR3/8C

Series	Max. W.P. bar	Product Code (Body only)	Dimensions mm										
			ø Tube	G	L1	L2	L3	L4	L5	L6	CH1	CH2	CH3
L	315	DSVW-06LR1/8	6	1/8	19	12	18.5	10.5	8	27	17	17	14
		DSVW-08LR1/4	8	1/4	21.5	14.5	25	14	12	29.5	22	19	17
		DSVW-10LR1/4	10	1/4	22.5	15.5	25	14	12	30.5	22	19	19
		DSVW-12LR3/8	12	3/8	25	18	30	16.5	12	33	27	24	22
		DSVW-15LR1/2	15	1/2	29	22	37.5	21.5	14	37	32	30	27
		DSVW-18LR1/2	18	1/2	29	21.5	37.5	21.5	14	38	32	30	32
	160	DSVW-22LR3/4	22	3/4	34	26.5	44	24	16	43	41	36	36
		DSVW-28LR1	28	1	38.5	31	55.5	30.5	18	47.5	50	46	41
		DSVW-35LR11/4 †	35	1.1/4	45.5	35	65.5	35.5	20	56.5	60	55	50
		DSVW-42LR11/2	42	1.1/2	50.5	39.5	75.5	40.5	22	62.5	70	60	60
S	630	DSVW-06SR1/4	6	1/4	23.5	16.5	25	14	12	31.5	22	19	17
		DSVW-08SR1/4	8	1/4	23.5	16.5	25	14	12	31.5	22	19	19
		DSVW-10SR3/8	10	3/8	26	18.5	30	16.5	12	35	27	24	22
		DSVW-12SR3/8	12	3/8	26	18.5	30	16.5	12	35	27	24	24
		DSVW-14SR1/2	14	1/2	31	23	37.5	21.5	14	41	32	30	27
	400	DSVW-16SR1/2	16	1/2	31	22.5	37.5	21.5	14	41	32	30	30
		DSVW-20SR3/4	20	3/4	36	25.5	44	24	16	47	41	36	36
		DSVW-25SR1	25	1	42.5	31.5	55.5	30.5	18	54.5	50	46	46
		DSVW-30SR11/4	30	1.1/4	49.5	36	65.5	35.5	20	62.5	60	55	50
	315	DSVW-38SR11/2 †	38	1.1/2	56.5	40.5	75.5	40.5	22	71.5	70	60	60

† Indent Item, available on request

DSVW Banjo Coupling Metric

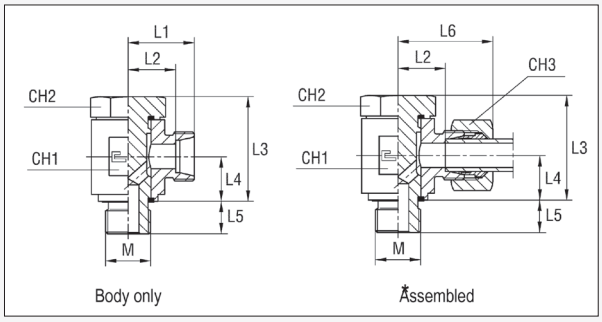

* Supplied as body only unless otherwise specified. Add 'C' to the end of the Product Code if a Nut and Cutting Ring are required. eg DSVW-12LM16x1.5C

Series	Max. W.P. bar	Product Code (Body only)	Dimensions mm										
			ø Tube	m	L1	L2	L3	L4	L5	L6	CH1	CH2	CH3
LL	100	DSVW-08LLM10x1 †	8	10x1	18	12.5	18.5	10.5	8	24	17	17	12
L	315	DSVW-06LM10x1	6	10x1	19	12	18.5	10.5	8	27	17	17	14
		DSVW-08LM12x1.5	8	12x1.5	21.5	14.5	25	14	12	29.5	22	19	17
		DSVW-10LM14x1.5	10	14x1.5	24	17	36	20	29	24	17	24	22
		DSVW-12LM16x1.5	12	16x1.5	25	18	30	16.5	12	33	27	24	22
		DSVW-15LM18x1.5	15	18x1.5	29	22	33.5	18.5	12	37	32	27	27
		DSVW-18LM22x1.5 †	18	22x1.5	29	21.5	37.5	21.5	14	38	32	30	32
	160	DSVW-22LM26x1.5	22	26x1.5	34	24	54.5	23.5	16		41	36	
		DSVW-22LM26x2 †	22	26x2	34	26.5	44	24	16	43	41	36	36
S	630	DSVW-06SM12x1.5 †	6	12x1.5	23.5	16.5	25	14	12	31.5	22	19	17
		DSVW-08SM14x1.5	8	14x1.5	23.5	16.5	25	14	12	31.5	22	19	19
		DSVW-10SM16x1.5	10	16x1.5	26	18.5	30	16.5	12	35	27	24	22
		DSVW-12SM18x1.5	12	18x1.5	29	21.5	33.5	18.5	12	38	32	24	24
		DSVW-14SM20x1.5 †	14	20x1.5	31	23	36	20	14	41	32	30	27
	400	DSVW-16SM22x1.5	16	22x1.5	31	22.5	37.5	21.5	14	41	32	30	30
		DSVW-20SM27x2	20	27x2	36	25.5	44	24	16	47	41	36	36

† Indent Item, available on request

PIRTEK
This page is part of a complete catalogue containing technical and safety data.
All data must be reviewed when selecting a product.
Pirtek reserve the right to change technical specifications without notice

EVW Adjustable Elbow Coupling
90 Degree

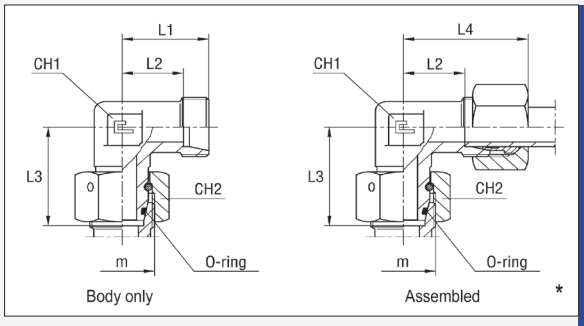

* Supplied as body only unless otherwise specified. Add 'C' to the end of the Product Code if a Nut and Cutting Ring are required. eg EVW-15LC

Series	Max. W.P. bar	Product Code (Body only)	Dimensions mm							
			ø Tube	m	L1	L2	L3	L4	CH1	CH2
L	315	EVW-06L	6	12 x 1.5	19	12	26	27	12	14
		EVW-08L	8	14 x 1.5	21	14	27.5	29	12	17
		EVW-10L	10	16 x 1.5	22	15	29	30	14	19
		EVW-12L	12	18 x 1.5	24	17	29.5	32	17	22
		EVW-15L	15	22 x 1.5	28	21	32.5	36	19	27
		EVW-18L	18	26 x 1.5	31	23.5	35.5	40	24	32
	160	EVW-22L	22	30 x 2	35	27.5	38.5	44	27	36
		EVW-28L	28	36 x 2	38	30.5	41.5	47	36	41
		EVW-35L	35	45 x 2	45	34.5	51.5	56	41	50
		EVW-42L	42	52 x 2	51	40	56	63	50	60
S	630	EVW-06S	6	14 x 1.5	23	16	27	31	12	17
		EVW-08S	8	16 x 1.5	24	17	27.5	32	14	19
		EVW-10S	10	18 x 1.5	25	17.5	30	34	17	22
		EVW-12S	12	20 x 1.5	29	21.5	31	38	17	24
		EVW-14S	14	22 x 1.5	30	22	35	40	19	27
	400	EVW-16S	16	24 x 1.5	33	24.5	36.5	43	24	30
		EVW-20S	20	30 x 2	37	26.5	44.5	48	27	36
		EVW-25S	25	36 x 2	42	30	50	54	36	46
		EVW-30S	30	42 x 2	49	35.5	55.5	62	41	50
	315	EVW-38S	38	52 x 2	57	41	63	72	50	60

EVF Adjustable Elbow Coupling
45 Degree

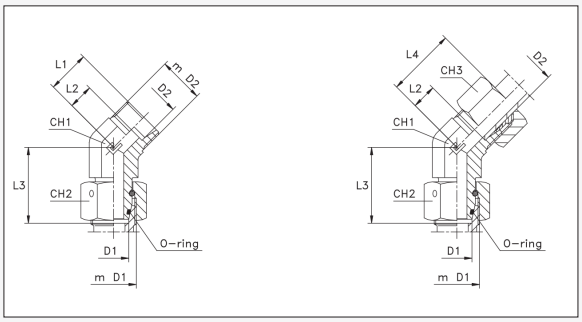

Series	Max. W.P. bar	Product Code (Body only)	Dimensions mm							
			ø Tube	M	L1	L2	L3	L4	CH1	CH2
L	315	EVF-10L	10	16x1.5	18	11	29	26	14	19
		EVF-12L	12	18 x 1.5	19	12	29.5	27	19	22
S	630	EVF-12S	12	20 x 1.5	23	15.5	31.5	32	19	24

THIS PAGE IS INTENTIONALLY LEFT BLANK

PIRTEK
This page is part of a complete catalogue containing technical and safety data.
All data must be reviewed when selecting a product.
Pirtek reserve the right to change technical specifications without notice

*

THIS PAGE IS INTENTIONALLY LEFT BLANK

EVT Adjustable Branch Tee Coupling

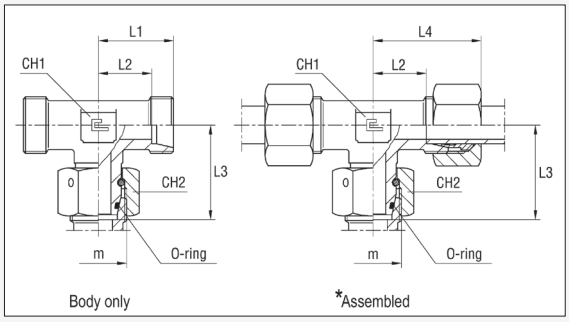

* Supplied as body only unless otherwise specified. Add 'C' to the end of the Product Code if Nuts and Cutting Rings are required. eg EVT-12LC

Series	Max. W.P. bar	Product Code (Body only)	Dimensions mm							
			ø Tube	m	L1	L2	L3	L4	CH1	CH2
L	315	EVT-06L	6	12 x 1.5	19	12	26	27	12	14
		EVT-08L	8	14 x 1.5	21	14	27.5	29	12	17
		EVT-10L	10	16 x 1.5	22	15	29	30	14	19
		EVT-12L	12	18 x 1.5	24	17	29.5	32	17	22
		EVT-15L	15	22 x 1.5	28	21	32.5	36	19	27
		EVT-18L	18	26 x 1.5	31	23.5	35.5	40	24	32
	160	EVT-22L	22	30 x 2	35	27.5	38.5	44	27	36
		EVT-28L	28	36 x 2	38	30.5	41.5	47	36	41
		EVT-35L	35	45 x 2	45	34.5	51.5	56	41	50
		EVT-42L	42	52 x 2	51	40	56	63	50	60
S	630	EVT-06S	6	14 x 1.5	23	16	27	31	12	17
		EVT-08S	8	16 x 1.5	24	17	27.5	32	14	19
		EVT-10S	10	18 x 1.5	25	17.5	30	34	17	22
		EVT-12S	12	20 x 1.5	29	21.5	31	38	17	24
		EVT-14S	14	22 x 1.5	30	22	35	40	19	27
	400	EVT-16S	16	24 x 1.5	33	24.5	36.5	43	24	30
		EVT-20S	20	30 x 2	37	26.5	44.5	48	27	36
		EVT-25S	25	36 x 2	42	30	50	54	36	46
		EVT-30S	30	42 x 2	49	35.5	55.5	62	41	50
	315	EVT-38S	38	52 x 2	57	41	63	72	50	60

PIRTEK

This page is part of a complete catalogue containing technical and safety data.
All data must be reviewed when selecting a product.
Pirtek reserve the right to change technical specifications without notice

EVL Adjustable Barrel Tee Coupling

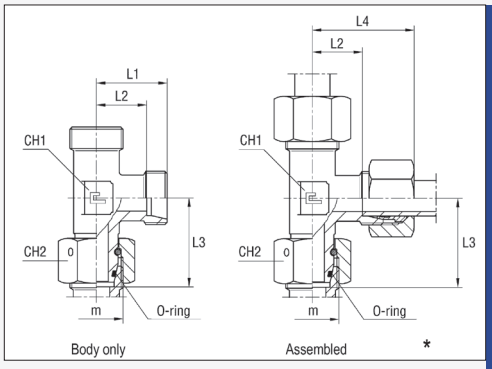

* Supplied as body only unless otherwise specified. Add 'C' to the end of the Product Code if Nuts and Cutting Rings are required. eg EVL-22LC

Series	Max. W.P. bar	Product Code (Body only)	Dimensions mm							
			ø Tube	m	L1	L2	L3	L4	CH1	CH2
L	315	EVL-06L	6	12 x 1.5	19	12	26	27	12	14
		EVL-08L	8	14 x 1.5	21	14	27.5	29	12	17
		EVL-10L	10	16 x 1.5	22	15	29	30	14	19
		EVL-12L	12	18 x 1.5	24	17	29.5	32	17	22
		EVL-15L	15	22 x 1.5	28	21	32.5	36	19	27
		EVL-18L	18	26 x 1.5	31	23.5	35.5	40	24	32
	160	EVL-22L	22	30 x 2	35	27.5	38.5	44	27	36
		EVL-28L	28	36 x 2	38	30.5	41.5	47	36	41
		EVL-35L	35	45 x 2	45	34.5	51.5	56	41	50
		EVL-42L	42	52 x 2	51	40	56	63	50	60
S	630	EVL-06S	6	14 x 1.5	23	16	27	31	12	17
		EVL-08S	8	16 x 1.5	24	17	27.5	32	14	19
		EVL-10S	10	18 x 1.5	25	17.5	30	34	17	22
		EVL-12S	12	20 x 1.5	29	21.5	31	38	17	24
		EVL-14S	14	22 x 1.5	30	22	35	40	19	27
	400	EVL-16S	16	24 x 1.5	33	24.5	36.5	43	24	30
		EVL-20S	20	30 x 2	37	26.5	44.5	48	27	36
		EVL-25S	25	36 x 2	42	30	50	54	36	46
		EVL-30S	30	42 x 2	49	35.5	55.5	62	41	50
	315	EVL-38S	38	52 x 2	57	41	63	72	50	60

T Equal Tee Coupling

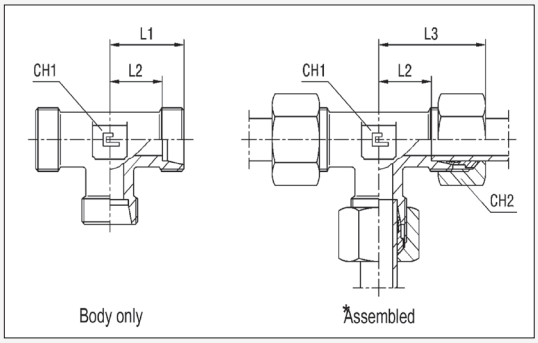

* Supplied as body only unless otherwise specified. Add 'C' to the end of the Product Code if Nuts and Cutting Rings are required. eg T-22LC

Series	Max. W.P. bar	Product Code (Body only)	Dimensions mm					
			ø Tube	L1	L2	L3	CH1	CH2
LL	100	T-04LL †	4	15	11	21	9	10
		T-06LL	6	15	9.5	21	9	12
		T-08LL †	8	17	11.5	23	12	14
L	315	T-06L	6	19	12	27	12	14
		T-08L	8	21	14	29	12	17
		T-10L	10	22	15	30	14	19
		T-12L	12	24	17	32	17	22
		T-15L	15	28	21	36	19	27
		T-18L	18	31	23.5	40	24	32
	160	T-22L	22	35	27.5	44	27	36
		T-28L	28	38	30.5	47	36	41
		T-35L	35	45	34.5	56	41	50
		T-42L	42	51	40	63	50	60
S	630	T-06S	6	23	16	31	12	17
		T-08S	8	24	17	32	14	19
		T-10S	10	25	17.5	34	17	22
		T-12S	12	29	21.5	38	17	24
		T-14S	14	30	22	40	19	27
	400	T-16S	16	33	24.5	43	24	30
		T-20S	20	37	26.5	48	27	36
		T-25S	25	42	30	54	36	46
		T-30S	30	49	35.5	62	41	50
	315	T-38S	38	57	41	72	50	60

† Indent Item, available on request

PIRTEK

This page is part of a complete catalogue containing technical and safety data.
All data must be reviewed when selecting a product.
Pirtek reserve the right to change technical specifications without notice

K Equal Cross Coupling

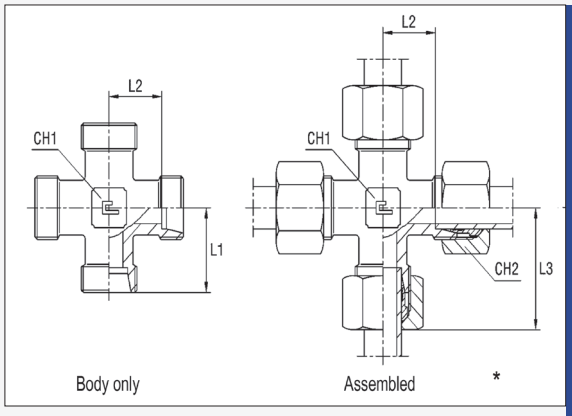

* Supplied as body only unless otherwise specified. Add 'C' to the end of the Product Code if a Nut and Cutting Ring are required. eg K-12LC

Series	Max. W.P. bar	Product Code (Body only)	Dimensions mm					
			ø Tube	L1	L2	L3	CH1	CH2
L	315	K-06L	6	19	12	27	12	14
		K-08L †	8	21	14	29	12	17
		K-10L	10	22	15	30	14	19
		K-12L	12	24	17	32	17	22
		K-15L †	15	28	21	36	19	27
		K-18L †	18	31	23.5	40	24	32
	160	K-22L †	22	35	27.5	44	27	36
		K-28L †	28	38	30.5	47	36	41
		K-35L †	35	45	34.5	56	41	50
		K-42L†	42	51	40	63	50	60
S	630	K-06S †	6	23	16	31	12	17
		K-08S †	8	24	17	32	14	19
		K-10S †	10	25	17.5	34	17	22
		K-12S †	12	29	21.5	38	17	24
		K-14S †	14	30	22	40	19	27
	400	K-16S †	16	33	24.5	43	24	30
		K-20S †	20	37	26.5	48	27	36
		K-25S †	25	42	30	54	36	46
		K-30S †	30	49	35.5	62	41	50
	315	K-38S †	38	57	41	72	50	60

† Non-Stocked item, availble on request

PIRTEK
This page is part of a complete catalogue containing technical and safety data.
All data must be reviewed when selecting a product.
Pirtek reserve the right to change technical specifications without notice