Click on Page No. or Series to Display Page PAGE NUMBER ACCESS MATRIX FOR HOSE TAILS 1/2

THREAD SERIES	K/J/2J	X	H / HLZ	T/ TP	I	A	B	R	P	F	L	G	S7	S8	S18	SV
BSP HOSE TAILS																
BSP Female Straight	6	44	59	79	-	105	-	111	117	125	-	-	134	144	-	-
BSP Flat Face Female Straight	8	-	-	-	-	-	-	-	-	-	-	-	-	-	-	-
BSP Female JIS (Mitsubishi)	38	-	-	90	-	-	-	-	-	-	-	-	-	-	-	-
BSP Female 45°	6	44	59	79	-	-	-	111	-	126	-	-	-	-	-	-
BSP Female 90° Swept	7	45	60	80	-	-	-	111	-	126	-	-	-	-	-	-
BSP Female 90° Compact	7	-	-	-	-	-	-	-	117	126	-	-	134	144	-	-
BSP Taper Male Straight	9	45	60	80	-	105	-	112	118	125	130	-	-	-	-	-
BSP Parallel Male Straight	8	-	-	-	-	-	-	-	117	-	129	-	-	-	-	-
BSP Male 90° Tapered & Parallel	-	-	-	-	-	-	-	-	-	-	130	-	-	-	-	-
BSP Banjos Straight	10	-	-	-	-	-	-	-	-	-	-	-	-	-	-	-
NPT HOSE TAILS																
NPSM Female Straight	11	-	-	81	-	-	-	-	-	-	-	-	135	145	-	-
NPT Male Straight / Male Swivel	11	46	61	81	101	106	-	115	119	-	-	132	135-136	145	-	153
JIC HOSE TAILS																
JIC Female Straight Imp. Hex	12	-	-	-	-	-	-	-	-	-	-	-	-	-	-	-
JIC Female 45° Elbow Imp. Hex	12	-	-	-	-	-	-	-	-	-	-	-	-	-	-	-
JIC Female 90° Elbow Imp. Hex	12	-	-	-	-	-	-	-	-	-	-	-	-	-	-	-
JIC Fem. 90°Compact Imp. Hex	13	-	-	-	-	-	-	-	-	-	-	-	-	-	-	-
JIC Female Straight	13	47	62	82	93	107	108	113	120	127	-	132	137	146	151	153
JIC Female 45° Elbow	14	47	62	83	93	107	-	113	-	128	-	-	138	-	-	-
JIC Female 90° Elbow	14	48	63	83	93	107	-	114	120	128	-	-	139	147		
JIC Female 45° Compact	15	-	-	-	-	-	-	-	-	-	-	-	-	-	-	-
JIC Female 90° Compact	15	-	-	-	-	-	-	-	120	128	-	-	-	-	-	-
JIC Female 90° Elbow Long Drop	16	-	-	-	-	107	-	113	-	127	-	-	138	-	-	-
JIC Male Straight	16	48	63	82	-	-	-	-	121	127	-	-	138	146	-	-
SAE / UN'O' HOSE TAILS																
SAE Female Straight	18	-	-	84	-	108	-	115	122	-	-	132	139	148	-	-
SAE Female 45° Elbow	-	-	-	-	-	108	-	-	-	-	-	132	-	-	-	-
SAE Female 90° Elbow	18	-	-	82	-	108	-	-	-	-	-	132	-	-	-	-
SAE Fem. 90° Compact Elbow	-	-	-	-	-	-	-	-	122	-	-	-	-	-	-	-
SAE Male Straight	18	-	-	-	-	-	-	-	122	-	-	-	-	-	-	-
UN'O' Male Straight	17	-	-	-	-	-	-	-	-	-	130	-	-	-	-	-
UN'O' Male 90° Swivel / Positional	17	-	-	-	-	-	-	-	-	-	130	-	-	-	-	-
O-RING FACE SEAL (ORFS)																
ORFS Female Straight	19	49	64	85	-	-	109	117	-	129	-	-	140	-	-	-
ORFS Female 30°/45° Elbow	20	49	64	86	-	-	-	117	-	-	-	-	-	-	-	-
ORFS Female 90° Elbow	21	97	64	86	-	-	110	116	-	129	-	-	140	-	-	-
ORFS Fem. 90° Elbow L. Drop	21	-	-	-	-	-	-	-	-	-	-	-	-	-	-	-
ORFS Male Straight	19	-	-	85	-	-	-	-	-	-	-	-	-	-	-	-
Metric Face Seal Straight (Chinese)	27	-	-	-	-	-	-	-	-	-	-	-	-	-	-	-
METRIC HOSE TAILS																
DKL (Light) Female Straight + Multiseal	23	-	-	87	-	-	-	-	-	-	-	-	141	149	-	-
DKL (Light) Female 45° Elbow	23	-	-	87	-	-	-	-	-	-	-	-	-	-	-	-
DKL (Light) Female 90° Elbow	23	-	-	87	-	-	-	-	-	-	-	-	-	-	-	-
DKL (Light) Male Straight	22	-	-	88	-	-	-	-	-	-	-	-	-	147	-	-
DKS (Heavy) Female Straight	24	50	65	88	99	-	-	-	-	-	-	-	141	148	-	-
DKS (Heavy) Female 45° Elbow	25	49	64	-	-	-	-	-	-	-	-	-	-	-	-	-
DKS (Heavy) Female 90° Elbow	25	49	64	-	-	-	-	-	-	-	-	-	-	-	-	-
DKS (Heavy) Male Straight	24	50	65	88	-	-	-	-	-	-	-	-	141	150	-	-
Metric Banjo Straight	27	-	-	89	-	-	-	-	-	-	-	-	-	-	-	-
Metric Face Seal Straight (Chinese)	27	-	-	-	-	-	-	-	-	-	-	-	-	-	-	-

PAGE NUMBER ACCESS MATRIX FOR HOSE TAILS

2 / 2

	K/J/2J	X	H / HLZ	T/ TP	I	932 / 934	SF	A	B	R	P	F	L	G	S7	S8	S18
SAE FLANGE HOSE TAILS	Flange O-Rings and Clamps Dimensions Pages 28 / 29																
Code 61 3000 psi																	
Straight	30	52	67	-	-	102	77	-	-	-	-	-	-	-	-	-	-
22° Elbow	30	-	67	-	-	102	77	-	-	-	-	-	-	-	-	-	-
30° Elbow	30	-	67	-	-	102	77	-	-	-	-	-	-	-	-	-	-
45° Elbow	31	52	67	-	-	103	77	-	-	-	-	-	-	-	-	-	-
60° Elbow	31	-	-	-	94	103	78	-	-	-	-	-	-	-	-	-	-
67° Elbow	31	-	-	-		103	78	-	-	-	-	-	-	-	-	-	-
90° Elbow	32	52	68	-	94	104	78	-	-	-	-	-	131	-	-	-	-
110° & 135° Elbows	33	-	-	-	-	-	-	-	-	-	-	-	-	-	-	-	-
Code 62 6000 psi																	
Straight, 20° & 30° Elbow	33	53	68/69	-	95/96	-	-	-	-	-	-	-	-	-	-	-	-
45° Elbow	34	54	69	-	97	-	-	-	-	-	-	-	-	-	-	-	-
60° Elbow	-	55	70	-	98	-	-	-	-	-	-	-	-	-	-	-	-
90° Elbow	34	56	71	-	99	-	-	-	110	-	-	-	-	-	-	-	-
130º Elbow			72														
Code 62 6000 psi Tapered Flange																	
Straight	35	-	73	-	-	-	-	-	-	-	-	-	-	-	-	-	-
45º Elbow	35	-	73	-	-	-	-	-	-	-	-	-	-	-	-	-	-
70º Elbow			73														
90º Elbow	35	-	73	-	-	-	-	-	-	-	-	-	-	-	-	-	-
"SUPERCAT" 6000 psi																	
Straight & 22°	33	53	70/71	-	94/95	-	-	-	-	-	-	-	-	-	-	-	-
30° & 45° Elbows	34	54/55	69/70	-	97	-	-	-	-	-	-	-	-	-	-	-	-
60° & 67° Elbows	34	55 / 56	70 / 71	-	98/99	-	-	-	-	-	-	-	-	-	-	-	-
90° Elbow	34	57	71	-	100	-	-	-	-	-	-	-	-	-	-	-	-
KOMATSU HOSE TAILS																	
Low Pressure Flanges (2 Bolt)																	
Straight	40	-	-	-	-	-	-	-	-	-	-	-	-	-	-	-	-
45° Elbow	40	-	-	-	-	-	-	-	-	-	-	-	-	-	-	-	-
90° Elbow	40	-	-	-	-	-	-	-	-	-	-	-	-	-	-	-	-
Standard Pressure Flanges																	
Straight	41	58	74	-	-	-	-	-	-	-	-	-	-	-	-	-	-
45° Elbow	41	58	74	-	-	-	-	-	-	-	-	-	-	-	-	-	-
60° Elbow	-	-	-	-	-	-	-	-	-	-	-	-	-	-	-	-	-
80° Elbow	-	-	-	-	-	-	-	-	-	-	-	-	-	-	-	-	-
90° Elbow	41	58	74	-	-	-	-	-	-	-	-	-	-	-	-	-	-
LeTOURNEAU FLANGE																	
Straight	-	-	77	-	-	-	-	-	-	-	-	-	-	-	-	-	-
45º Elbow	-	-	77	-	-	-	-	-	-	-	-	-	-	-	-	-	-
90º Elbow	-	-	77	-	-	-	-	-	-	-	-	-	-	-	-	-	
SPECIALTY HOSE TAILS																	
Roll Grooved	42	-	-	-	- -	-	-	-	-	-	-	-	-	-	-	-	
JAPANESE	-																
JIS Metric Male. Str (Kobelco)	39	-	-	-	-	-	-	-	-	-	-	-	-	-	-	-	
JIS Metric Fem. Str. (Komatsu)	39	-	-	90	-	-	-	-	-	-	-	127	-	-	-	-	-
JIS BSP Fem. Str. (Mitsubishi)	38	-	-	90	-	-	-	-	-	-	-	-	-	-	-	-	-
STANDPIPES																	
Metric Straight	26	-	-	89	-	-	-	-	-	-	-	-	-	142	151	-	-
Metric 45° Elbow	26	-	-	-	-	-	-	-	-	-	-	-	-	142	151	-	-
Metric 90° Elbow	26	-	-	-	-	-	-	-	-	-	-	-	-	142	151	-	-
PRESSURE WASHERS																	
Kärcher Tails and Accessories	42	-	-	91	-	-	-	-	-	-	-	-	-	-	-	-	-
High Press. DKS Metric Fem. Str. W/Blast	-	-	-	-	99	-	-	-	-	-	-	-	-	-	-	-	-
EMERGENCY																	
Weld-on Lifesavers	43	-	-	91	-	-	-	-	-	-	123	-	-	-	-	-	-
Hose Joiner (Double ended Tail)	43	-	61	91	-	-	-	-	-	-	123	-	-	-	-	-	-
FERRULES	B Series Pg 108					Non Skive Field Attachable Pg 124					SF Series Pg 77			Interlock Pg 92			
STAPLELOK & SKV / SSKV	Refer to Section U Mining																

PIRTEK

This page is part of a complete catalogue containing technical and safety data.
All data must be reviewed when selecting a product.
Pirtek reserve the right to change technical specifications without notice

HOW TO SPECIFY PIRTEK HOSE TAILS

Hose Tail Part Number
C629L-2016X

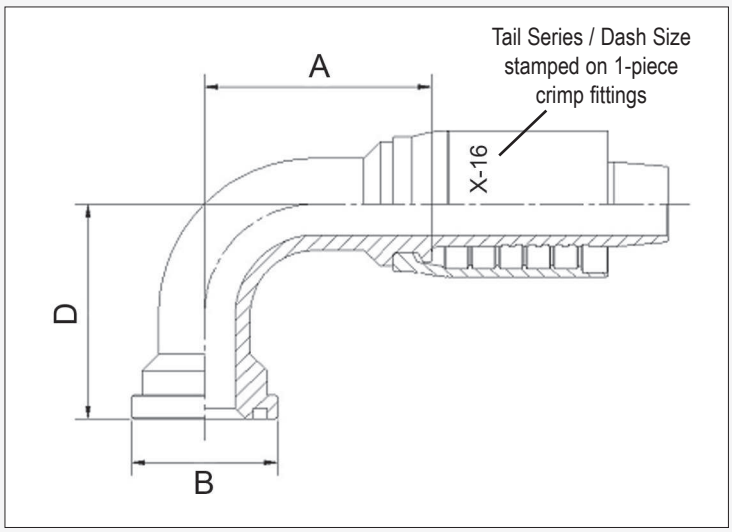

Configuration	Angle	Type	-	Fitting Size	Hose Size	Series
C62	**9**	**L**	**-**	**20**	**16**	**X**
End configuration and angle are listed on the next page	1 = straight 2 = 22° bend 3= 30° bend 4 = 45° bend 6 = 60° bend 7 = 67° bend 9 = 90° bend	L = long drop C = compact C = Caterpillar or		Defined by type of end connection i.e. thread, flange, tube, banjo etc. See the identification table	- 03 = 3/16" ID - 04 = 1/4" ID - 05 = 5/16" ID - 06 = 3/8" ID - 08 = 1/2" ID -10 = 5/8" ID -12 = 3/4" ID -16 = 1" ID etc.	A Series J Series K Series P Series S7 Series S8 Series X Series etc. (Tabulated below)
C62 refers to an SAE Code 62 flange fitting	9=90°bend	L = long drop		Flange OD (Dim. B) = 53.98 mm for size 20 Code 62 flange	Hose ID is 1" for dash 16 hose	X Series suits 1" ID Class 42 hose

Possible combinations of these 3 items are as listed on the next page. Note that for some situations, the position of the 'L' can vary from the example given above.

Hose ID for 100R5 and its variants differ from 1/16" convention. Refer to the specific hose table for details.

Refer to page C 5 or a current crimp chart for the correct selection

K, J, 2J, 3J, R, X, H & T Series Fittings are stamped on the Ferrule of the Hose Tail as illustrated above

Crimp Tail Series	Application
K / J / 2J / 3J B (+ SFB)	Braided & multi-spiral hoses for general use. (**B** Series 2 piece)
X / H / HLZ / U	More demanding multi-spiral applications
T/TP	STH, MPH and thermoplastic hoses
I	Interlock attachment for extreme multi-spiral applications
932 / 934 / 954	Large bore hoses

Tail Series	Application
A / R	SAE 100R5 dimensioned hoses **A** = field attachable, **R** = crimp
P	Push-on fitting for low pressure textile braided hoses
F (RN1 / RN2)	Field attachable for SAE 1-wire and 2-wire dimensioned hoses
L	Low pressure tail for suction and return hoses (clamp required)
G	Gas hoses

Crimp / Swage Tail Series	Application
S7	Synflex tail for SAE 100R7 dimensioned thermoplastic hose
S8	Synflex tail for SAE 100R8 dimensioned thermoplastic hose
S18	Synflex tail new generation SAE 100R18 thermoplastic hose
SV	Suits high performance Synflex hoses (restrictions apply)

See a pictorial representation of the various Tail Series overleaf

**This page is part of a complete catalogue containing technical and safety data.
All data must be reviewed when selecting a product.
Pirtek reserve the right to change technical specifications without notice**

QUICK GUIDE TO PIRTEK PRODUCT CODES

All codes require size information and the appropriate hose tail Series (Suffix) to allow a complete Product Code to be assembled. See page C 1 for a guide to ordering

	Straight			Elbow Fitting						
Type of Fitting	Unthreaded	Male	Female	22°	30°	45°	60°	67°	90°	90° Long
Banjo BSP	BB1									
Banjo Metric	BM1									
BSP Flat Face			BFF1							
BSPP		BPM1	BF1			BF4			BF9	BFL9 †
BSPP Compact									BFC9	
BSPT		BTM1								
JIC		JM1	JF1			JF4			JF9	JFL9
JIC Compact						JFC4			JFC9	
JIC Imperial Hex.			JFIH1			JFIH4			JFIH9	
JIC Imp. Hex Compact									JFCIH9	
JIS / BSP (Mitsubishi)			JBF1							
JIS / Metric (Komatsu)			JMF1			JMF4			JMF9	
Kärcher	KT1									
Kobelco		KOBM1								
Metric GAZ (French)										
Metric heavy (DKS / DKO)		DSM1	DSF1			DSF4			DSF9	
Metric Multi Seal (DKL)			DMSF1							
Metric light (DKL)		DLM1	DLF1			DLF4			DLF9	
Metric Face Seal (Chinese)			MOF1							
NPT		NM1	NF1							
ORFS		OM1	OF1			OF4			OF9	OFL9
SAE		SM1	SF1			SF4			SF9	
SAE Compact									SFC9	
SAE Inverted Flare swivel										
SAE Flange Code 61 3000 psi	C611			C612	C613	C614	C616	C617	C619	C619L
SAE Flange Code 62 6000 psi	C621			C622	C623	C624	C626	C627	C629	C629L
'Supercat' Flange 6000 psi	C621C			C622C	C623C	C624C	C626C	C627C	C629C	
JIS Flange (Komatsu)	As for SAE Flange Code 61 except with 'K' prefix. Example: KC611									
Joiner (2-ended hose tail)	HJ									
Standpipe Imperial	SPI1					SPI4			SPI9	
Standpipe Metric	SPM1					SPM4			SPM9	
SKV										
SSKV										
Staple Lock	SLM1					SLM4			SLM9	
Staple Lock Super	SSLM1									
UNO (SAE O-Ring Boss)		UNM1							UNM9	
UNO Swivel		UMS1								
Weld on Tail (Lifesaver)	WO1									

HOSE TAIL SERIES PHYSICAL APPEARANCE

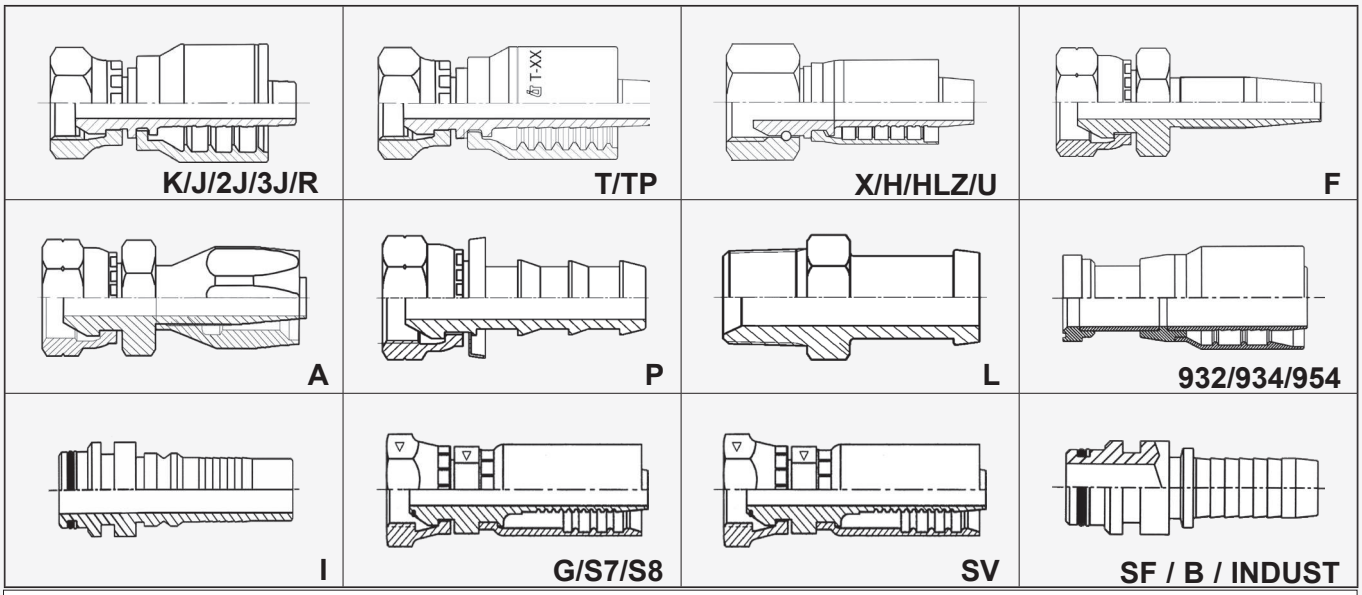

Note that the Industrial tails (INDUST above) are not documented in this Catalogue. Please consult Mining or Industrial Fittings Sections for details.

SF & B Series Tails resemble Industrial Tails and require a separate Ferrule

PIRTEK

This page is part of a complete catalogue containing technical and safety data.
All data must be reviewed when selecting a product.
Pirtek reserve the right to change technical specifications without notice

QUICK GUIDE TO HOSE TAIL SERIES

The hose tail Series documented here represent the Suffix of the Product Code (Page C 1) Please consult current published Crimp Charts for the most recent Technical Data

Hose Product Code		Hose Dimension													
	dia	-02	-03	-04	-05	-06	-08	-10	-12	-16	-20	-24	-32	-40	-48
	size	1/8"	3/16"	1/4"	5/16"	3/8"	1/2"	5/8"	3/4"	1"	1.1/4"	1.1/2"	2"	2.1/2"	3"
	DN	3	5	6	8	10	12	16	19	25	32	38	50	63	75
HTAB				R	R	R	R	R	R						
HTFH										R	R	R			
IROFSD												932	J/932	J/954	934
MPH				P	P	P/T	P/T	P/T	P	P					
IRFAW *												U	U	J	J.
IRFWSDH*												J			U
IRRF				T*	T*	T*	T*			T*					
R4HT									J	J	J	J	J	J	SF
100R5HT				A/R	A/R/K*	A/R/K*	A/R/K*	A/R/J*	A/R/K*	A/R	A/R	A/R	A/R		
JW210 (A)				K		K									
JW250 (A)				K		K									
JW400 (A)						K									
R1AT				K		K	K		J,2J	J	J/2J	J/2J	J/2J	954	
R2AT				K		K	K	K	J,2J	J	J/2J	J/2J	J/2J	954	
2SC														J/954	934
R2ATHT				K		K	K	K	J,2J	J	J/2J	J/2J	J/2J		
C21													J/2J/X		
C25/ PC25/ PC28								K	J,2J	J	J/2J/X	J/2J/X			
C35/ PC35					K	K/J	K/J	K	J/2J/H/I	J/X/I	X/I	X/I	X/I		
C42 / PC42				K		K/J	K/J	J	X/H/I	J/X/I	H/X/I	H/X/I	HLZ		
C45								B/SFB							
PE2				K		K/2J	K	K	2J	J/2J					
PE4						K/2J	K/2J		2J	J/2J	J/X				
PE6											H/X	H/X			
LPG					G (-06)										
JBF40														J/BSMS	
R12C						K	K	K	J/2J/X	J/X	J/2J/X	J/2J/X	J/2J/X		
R13C									X	X	X/I	X/I	X/I		
WB1000									I/IFWB						
WB1100							I/IFWB								
3130			S7/T	S7/T	S7/T	S7/T	S7/T		S7/T	S7/T					
3800			S7	S7		S7	S7								
30CT, 3360				S7/T	S7/T	S7/T	S7/S8/T	S18							
37AL				S7/T		S7/T	S7/T								
3840			S7	S7		S7	S7								
3E80				S8		S8	S8								
3R80			S8	S8		S8	S8		S8	S8					
3VEO				SV		SV		Assembly only by accredited personnel							
TP1W			T	T	T	T	T								
TP2W				K		K	K								
TPR7/NC		T/TP	T	T	T	T	T								
TPR8/NC		TP	T	T		T	T								
STH			T	T	T	T	T	T	T	T					

* Denotes that the 1/16" Dash Size convention is not applicable for these Products

NOTE: A hose Insertion Depth Tool is available Product Code **HIT-20** and is an Ex-Stock Item

BSP
ORIGIN: GREAT BRITAIN

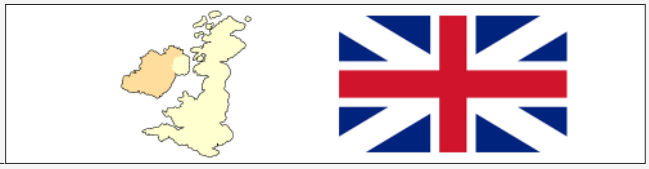

BF1
BSPP FEMALE STRAIGHT

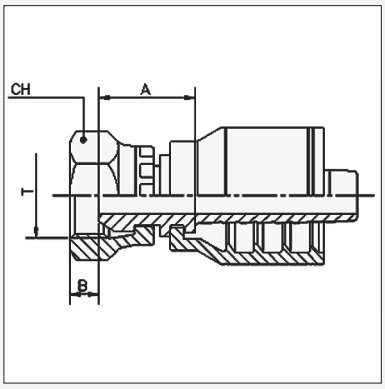

Product Code	BSPP Thread		Nominal ID			Dimensions mm			
	T	Size	DN	Inch	Dash	A	B	CH	
BF1-0204K	1/8" - 28	02	6	1/4"	04	21.5	5.5	14	
BF1-0404K *	1/4" - 19	04	6	1/4"	04	17.5	4.2	19	
BF1-0604K	3/8" - 19	06	6	1/4"	04	18.5	6	22	
BF1-0605K †	3/8" - 19	06	8	5/16"	05	18.5	6	22	
BF1-0805K †	1/2" - 14	08	8	5/16"	05	20.5	7	27	
BF1-0406K	1/4" - 19	04	10	3/8"	06	17.5	4.2	19	
BF1-0606K *	3/8" - 19	06	10	3/8"	06	18.5	6	22	
BF1-0806K	1/2" - 14	08	10	3/8"	06	20.5	6.5	27	
BF1-0608K	3/8" - 19	06	12	1/2"	08	19	6	22	
BF1-0808K *	1/2" - 14	08	12	1/2"	08	21	6.5	27	
BF1-1008K	5/8" - 14	10	12	1/2"	08	18.5	9.5	27	
BF1-1208K	3/4" - 14	12	12	1/2"	08	23.3	8.7	32	
BF1-1010K	5/8" - 14	10	16	5/8"	10	18	9.5	27	
BF1-1210K	3/4" - 14	12	16	5/8"	10	21.3	8.7	32	
BF1-1212J	3/4" - 14	12	20	3/4"	12	23.3	8.7	32	
BF1HD-1212J ‡	3/4" - 14	12	20	3/4"	12	23.3	8.7	32	
BF1-1612J *	1" - 11	16	20	3/4"	12	29.5	10.5	38	
BF1-1616J *	1" - 11	16	25	1"	16	29.6	10.5	38	
BF1HD-1616J *‡	1" - 11	16	25	1"	16	29.6	10.5	38	
BF1-2016J *	1.1/4" - 11	20	25	1"	16	39	10	50	
BF1-2020J *	1.1/4" - 11	20	32	1.1/4"	20	37.8	10	50	
BF1HD-2020J * ‡	1.1/4" - 11	20	32	1.1/4"	20	37.8	10	50	
BF1-2424J *	1.1/2" - 11	24	38	1.1/2"	24	35.8	12	55	
BF1-3232J *	2" - 11	32	50	2"	32	37.6	16	70	

* Free Nut version. † Available only to special order [a] Thrust wired nut version
‡ Heavy duty hammer coupling. O-Ring incorporated in seal, and thicker tail. Uses high strength carbon steel. O-Ring replacement Product Codes **BO-12**, **BO-16**, **BO-20**

BF4
BSPP FEMALE 45° ELBOW

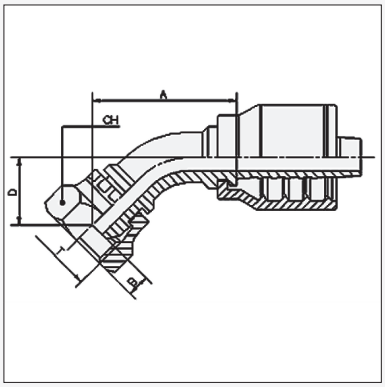

Product Code	BSPP Thread		Nominal ID			Dimensions mm			
	T	Size	DN	Inch	Dash	A	B	CH	D
BF4-0404K *	1/4" - 19	04	6	1/4"	04	31.5	4.2	19	13
BF4-0604K	3/8" - 19	06	6	1/4"	04	34.2	6	22	14.4
BF4-0606K *	3/8" - 19	06	10	3/8"	06	39	6	22	15
BF4-0808K *	1/2" - 14	08	12	1/2"	08	46	6.5	27	18
BF4-1010K	5/8" - 14	10	16	5/8"	10	61.5	9.5	27	22.8
BF4-1212J	3/4" - 14	12	20	3/4"	12	69.6	8.7	32	28.3
BF4-1616J [a]	1" - 11	16	25	1"	16	85	10.5	38	32
BF4-2020J [a]	1.1/4" - 11	20	32	1.1/4"	20	106.4	10	50	37.7
BF4-2424J [a]	1.1/2" - 11	24	38	1.1/2"	24	132.4	12	55	51.5
BF4-3232J [a]	2" - 11	32	50	2"	32	147.5	16	70	60

PIRTEK

This page is part of a complete catalogue containing technical and safety data.
All data must be reviewed when selecting a product.
Pirtek reserve the right to change technical specifications without notice

BSP
ORIGIN: GREAT BRITAIN

BF9
BSPP FEMALE 90° ELBOW

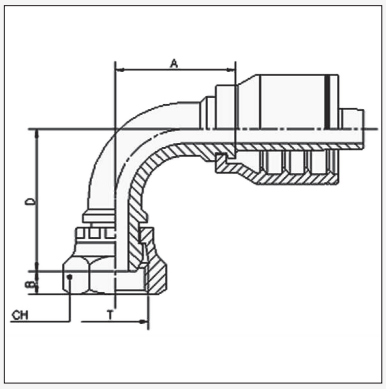

Product Code	BSPP Thread		Nominal ID			Dimensions mm			
	T	Size	DN	Inch	Dash	A	B	CH	D
BF9-0404K *	1/4" - 19	04	6	1/4"	04	27.5	4.2	19	27
BF9-0404K-061	1/4" - 19	04	6	1/4"	04	27.6	4.2	19	61
BF9-0604K *	3/8" - 19	06	6	1/4"	04	27.5	6	22	29.5
BF9-0606K *	3/8" - 19	06	10	3/8"	06	32.5	6	22	30
BF9-0606K-063	3/8" - 19	06	10	3/8"	06	31.5	6	22	63
BF9-0806K *	1/2" - 14	08	10	3/8"	06	32.5	6.5	27	32
BF9-0808K *	1/2" - 14	08	12	1/2"	08	39	6.5	27	36.5
BF9-0808K-071	1/2" - 14	08	12	1/2"	08	37.2	6.5	27	71
BF9-1010K	5/8" - 14	10	16	5/8"	10	46.5	9.5	27	49
BF9-1212J	3/4" - 14	12	20	3/4"	12	62.5	8.7	32	58.8
BF9-1212J-084	3/4" - 14	12	20	3/4"	12	55.5	8.7	32	84
BF9-1612J	1" - 11	16	20	3/4"	12		10.5	38	
BF9-1616J [a]	1" - 11	16	25	1"	16	73	10.5	38	71
BF9-1616J-102	1" - 11	16	25	1"	16	72	10.5	38	102
BF9-2020J [a]	1.1/4" - 11	20	32	1.1/4"	20	91.5	10	50	83
BF9-2020J-118	1.1/4" - 11	20	32	1.1/4"	20	87.5	10	50	118
BF9-2424J [a]	1.1/2" - 11	24	38	1.1/2"	24	114	12	55	108
BF9-3232J [a]	2" - 11	32	50	2"	32	130	16	70	128

* Free Nut version. [a] Thrust wired nut version

BFC9
BSPP FEMALE 90° COMPACT ELBOW

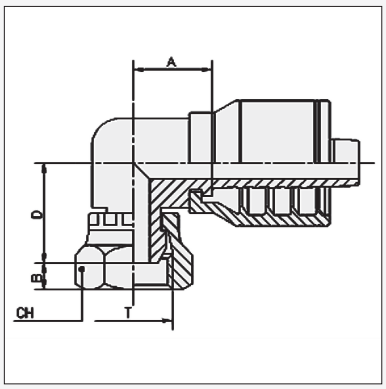

Product Code	BSPP Thread		Nominal ID			Dimensions mm			
	T	Size	DN	Inch	Dash	A	B	D	CH
BFC9-0404K	1/4" - 19	04	6	1/4"	04	17.5	6.5	23.5	19
BFC9-0606K	3/8" - 19	06	10	3/8"	06	21.5	6.5	25.5	22
BFC9-0808K	1/2" - 14	08	12	1/2"	08	25.5	9	28	27
BFC9-1212J	3/4" - 14	12	20	3/4"	12	35.7	9	36	32
BFC9-1616J	1" - 11	16	25	1"	16	32	10.5	34.5	38

BSP
ORIGIN: GREAT BRITAIN

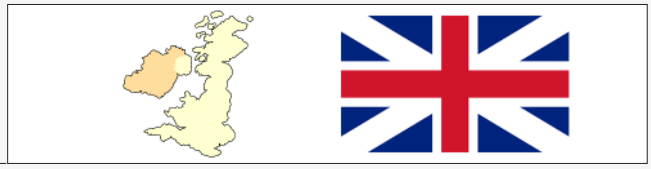

BFF1
BSPP FLAT FACE FEMALE STRAIGHT

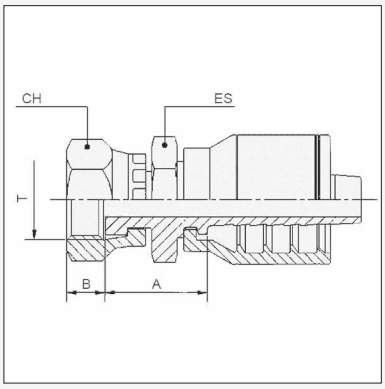

Product Code	BSPP Thread		Nominal ID			Dimensions mm		
	T	Size	DN	Inch	Dash	A	B	CH
BFF1-0606K	3/8" - 19	06	10	3/8"	06	15.7	9	22
BFF1-0806K	1/2" - 14	08	10	3/8"	06	16	10.5	27
BFF1-0808K	1/2" - 14	08	12	1/2"	08	16.5	10.5	27
BFF1-1212J	3/4" - 14	12	20	3/4"	12	20.5	11.5	32
BFF1-1616J	1" - 11	16	25	1"	16	25	15	38

BPM1
BSPP MALE STRAIGHT

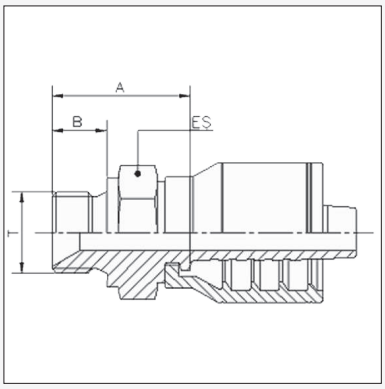

Product Code	BSPP Thread		Nominal ID			Dimensions mm		
	T	Size	DN	Inch	Dash	A	B	ES
BPM1-0404K	1/4" - 19	04	6	1/4"	04	26.5	11	19
BPM1-0604K	3/8" - 19	06	6	1/4"	04	28.5	12	22
BPM1-0605K	3/8" - 19	06	8	5/16"	05	28.5	12	22
BPM1-0606K	3/8" - 19	06	10	3/8"	06	28.5	12	22
BPM1-0806K	1/2" - 14	08	10	3/8"	06	28	12	22
BPM1-0808K	1/2" - 14	08	12	1/2"	08	34	14	27
BPM1-0812J	1/2" - 14	8	20	3/4"	12	34.5	14	27
BPM1-1212J	3/4" - 14	12	20	3/4"	12	38	16	32
BPM1-1216J	3/4" - 14	12	25	1"	16	39	16	32
BPM1-1612J	1" - 11	16	20	3/4"	12	41	19	41
BPM1HD-1612J ‡	1"-11	16	20	3/4"	12	41.5	19	41
BPM1-1616J	1" - 11	16	25	1"	16	43	19	41

* Free Nut version. † Available only to special order ª Thrust wired nut version

‡ Heavy duty hammer coupling. Thicker and high strength carbon steel.

* Avaliable in Stainless Steel, add SS to part number e.g. BPM1SS-0404K

BPMS1
BSPP MALE SWIVEL STRAIGHT

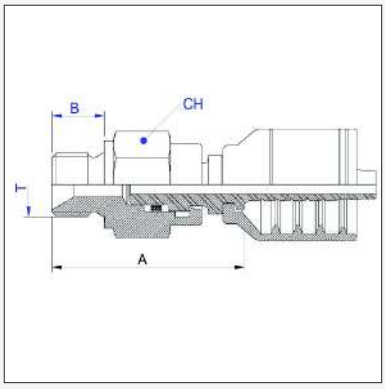

Product Code	BSPP Thread		Nominal ID			Dimensions mm		
	T	Size	DN	Inch	Dash	A	B	CH
BPMS1-0404K	1/4" - 19	04	6	1/4"	04	40.3	11.0	19
BPMS1-0606K	3/8"- 19	6	10	3/8"	06	44.5	12.0	22
BPMS1-0808K	1/2"- 14	8	12	1/2"	08	54.0	14.0	27

PIRTEK

This page is part of a complete catalogue containing technical and safety data.
All data must be reviewed when selecting a product.
Pirtek reserve the right to change technical specifications without notice

BSP
ORIGIN: GREAT BRITAIN

BTM1
BSPT MALE STRAIGHT

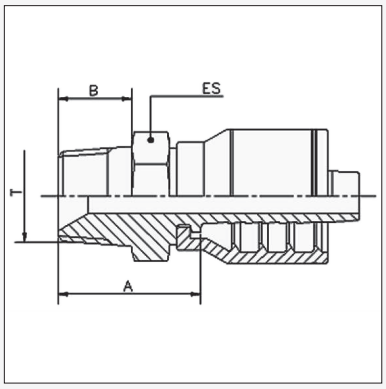

Product Code	BSPT Thread		Nominal ID			Dimensions mm			
	T	Size	DN	Inch	Dash	A	B	ES	
BTM1-0204K	1/8” - 28	02	6	1/4”	04	20.2	9.7	12	
BTM1-0404K	1/4” - 19	04	6	1/4”	04	26.5	14	14	
BTM1-0604K	3/8” - 19	06	6	1/4”	04	29	15	19	
BTM1-0406K	1/4” - 19	04	10	3/8”	06	24.5	14	14	
BTM1-0606K	3/8” - 19	06	10	3/8”	06	29	15	19	
BTM1-0806K	1/2” - 14	08	10	3/8”	06	32	18	22	
BTM1-0608K	3/8” - 19	06	12	1/2”	08	27.5	15	19	
BTM1-0808K	1/2” - 14	08	12	1/2”	08	32.5	18	22	
BTM1-1208K	3/4” - 14	12	12	1/2”	08	37	20	27	
BTM1-1010K	5/8” - 14	10	16	5/8”	10	33	16	24	
BTM1-1210K	3/4” - 14	12	16	5/8”	10	42	20	27	
BTM1-1212J	3/4” - 14	12	20	3/4”	12	39	20	27	
BTM1-1612J	1” - 11	16	20	3/4”	12	47	23	36	
BTM1-1616J	1” - 11	16	25	1”	16	48.1	23	36	
BTM1-2020J	1.1/4” - 11	20	32	1.1/4”	20	52.9	25	46	
BTM1-2424J	1.1/2” - 11	24	38	1.1/2”	24	53	28	50	
BTM1-3232J	2” - 11	32	50	2”	32	56.7	28	60	

BSP BANJOS

ORIGIN: GREAT BRITAIN

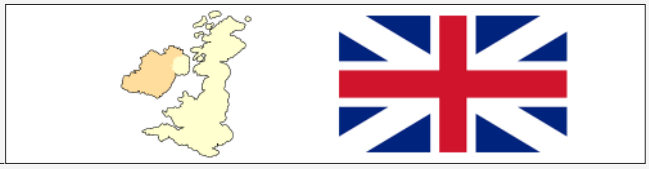

BB1

BSPP BANJO STRAIGHT

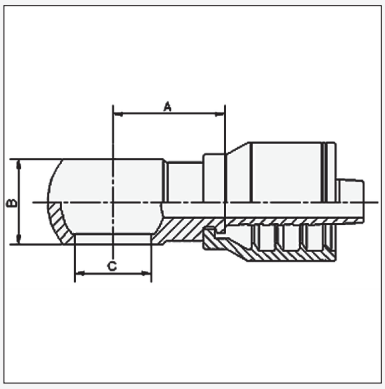

Product Code	BSPP Thread		Nominal ID			Dimensions mm		
	T	Size	DN	Inch	Dash	A	B	C
BB1-0404K	1/4" - 19	04	6	1/4"	04	22	14	13.2
BB1-0606K	3/8" - 19	06	10	3/8"	06	24	18	16.7
BB1-0808K	1/2" - 14	08	12	1/2"	08	27	22	21
BB1-1010K	5/8" - 14	10	16	5/8"	10	28	24	22.9
BB1-1212J	3/4" - 14	12	20	3/4"	12	38	29	26.5
BB1-1616J	1 - 11	16	25	1"	16	46.1	37	33.3

BBB

BSPP BANJO BOLT

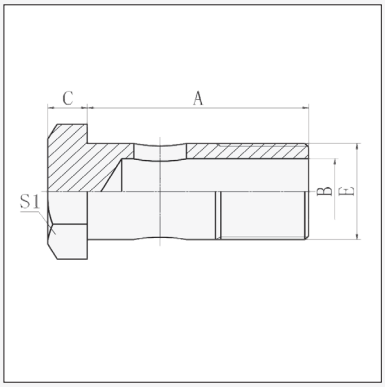

Product Code	Bolt Thread		Dimension (mm)				
	E	Size	A	B	C	S1	E
BBB-02	1/8" - 28	02	29.5	4.8	4.8	14	9.7
BBB-04	1/4" - 19	04	28.5	6	6	19	13.2
BBB-06	3/8" - 19	06	38.5	9	7	22	16.7
BBB-08	1/2" - 14	08	44	13	8.5	27	21
BBB-10	5/8" - 14	10	48.5	15	10	30	22.9
BBB-12	3/4" - 14	12	56	18	10	32	26.5
BBB-16	1" - 11	16	68.5	22	13	41	33.3

PIRTEK

This page is part of a complete catalogue containing technical and safety data.
All data must be reviewed when selecting a product.
Pirtek reserve the right to change technical specifications without notice

NPT
ORIGIN: NORTH AMERICA

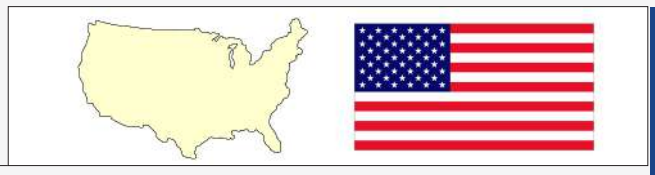

NF1
NPSM FEMALE STRAIGHT

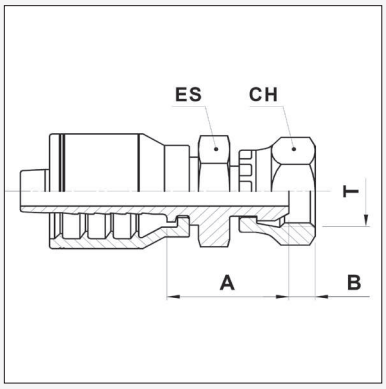

Product Code	NPSM Thread		Nominal ID			Dimensions mm			
	T	Size	DN	Inch	Dash	A	B	CH	ES
NF1-0404K	1/4" - 18	04	6	1/4"	04	24	4.2	19	19
NF1-0606K	3/8" - 16	06	10	3/8"	06	26.5	5.7	22	22
NF1-0808K	1/2" - 14	08	12	1/2"	08	29	6.9	27	22
NFF1-0606K †	3/8" - 18	06	10	3/8"	06	28	12.7	22	

† Fixed Head Style

NM1/NMS1
NPT MALE STRAIGHT
NPT MALE SWIVEL STRAIGHT

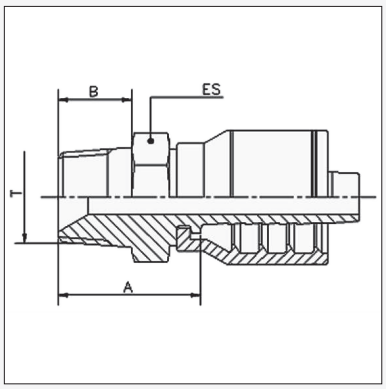

Product Code	NPT Thread		Nominal ID			Dimensions mm			
	T	Size	DN	Inch	Dash	A	B	ES	
NM1-0204K	1/8" - 27	02	6	1/4"	04	22	9.5	14	
NM1-0404K	1/4" - 18	04	6	1/4"	04	26.5	14	14	
NMS1-0404K	1/4" - 18	04	6	1/4"	04	36.5	14	17	
NM1-0604K	3/8" - 18	06	6	1/4"	04	28	14	19	
NM1-0406K	1/4" - 18	04	10	3/8"	06	26.5	14	17	
NM1-0606K	3/8" - 18	06	10	3/8"	06	28	14	19	
NMS1-0606K	3/8" - 18	06	10	3/8"	06	44.5	14	19	
NM1-0806K	1/2" - 14	08	10	3/8"	06	33	19	22	
NM1-0608K	3/8" - 18	06	12	1/2"	08	28.5	14	19	
NM1-0808K	1/2" - 14	08	12	1/2"	08	33.5	19	22	
NMS1-0808K	1/2"-14	08	12	1/2"	08	42	19	27	
NM1-1212J	3/4" - 14	12	20	3/4"	12	43	19	27	
NM1-1616J	1" - 11½	16	25	1"	16	49.1	24	36	
NM1-2020J	1.1/4" - 11½	20	32	1.1/4"	20	62.9	24.5	46	
NM1-2424J	1.1/2" - 11½	24	38	1.1/2"	24	64	25.5	50	
NM1-3232J	2" - 11½	32	50	2"	32	76.7	26	65	

NM1E
NPT EXTENDED MALE STRAIGHT

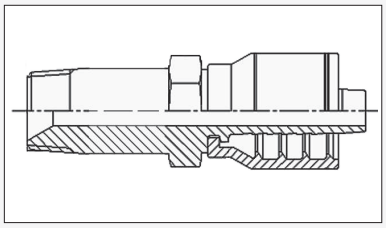

Product Code	NPT Thread		Nominal ID			Dimensions mm			
	T	Size	DN	Inch	Dash	A	B	ES	
NM1E-0404K	1/4" - 18	04	6	1/4"	04	36.5	21.5	14	
NM1E-0604K	3/8" - 18	06	6	1/4"	04	38	21.5	19	
NM1E-0606K	3/8" - 18	06	10	3/8"	06	38	21.5	19	

JIC FITTINGS
ORIGIN: NORTH AMERICA

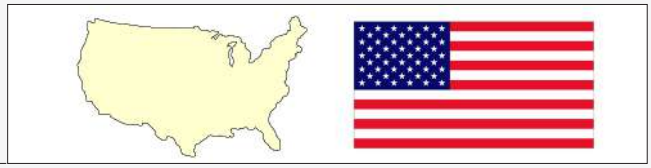

JFIH1
JIC FEMALE STRAIGHT IMPERIAL HEX

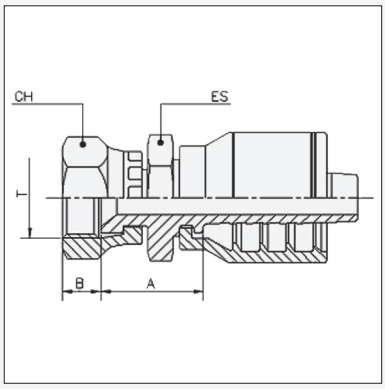

Product Code	JIC Thread			Hose Bore			Dimensions (mm)			
	Thread	Size	Tube	DN	Inch	Size	A	B	CH	ES
JFIH1-0704K *	7/16" - 20	07	04	6	1/4"	04	20.8	8.5	14.29	14
JFIH1-0904K	9/16" - 18	09	06	6	1/4"	04	21.5	9.5	17.46	14
JFIH1-0906K	9/16" - 18	09	06	10	3/8"	06	24	9.5	17.46	17
JFIH1-0906J	9/16" - 18	09	06	10	3/8"	06	24	9.5	17.46	17
JFIH1-1206K *	3/4" - 16	12	08	10	3/8"	06	25.9	10.7	22.22	19
JFIH1-1208K *	3/4" - 16	12	08	12	1/2"	08	25.4	10.7	22.22	19
JFIH1-1408K *	7/8" - 14	14	10	12	1/2"	08	25.4	12.7	27	22

*** Obsolete - refer to JF1**

JFIH4
JIC FEMALE 45° ELBOW IMPERIAL HEX

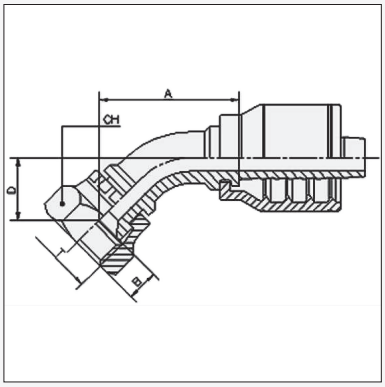

Product Code	JIC Thread			Hose Bore			Dimensions (mm)			
	Thread	Size	Tube	DN	Inch	Size	A	B	CH	D
JFIH4-0704K *	7/16" - 20	07	04	6	1/4"	04	36	8.5	14.29	14
JFIH4-0904K	9/16" - 18	09	06	6	1/4"	04	34.5	9.5	17.46	14.5
JFIH4-0906K	9/16" - 18	09	06	10	3/8"	06	44.5	9.5	17.46	11.5
JFIH4-1206K *	3/4" - 16	12	08	10	3/8"	06	34.5	10.7	22.22	15
JFIH4-1208K *	3/4" -16	12	08	12	1/2"	08	43.2	10.7	22.22	13.8

*** Obsolete - refer to JF4**

JFIH9
JIC FEMALE 90° ELBOW IMPERIAL HEX

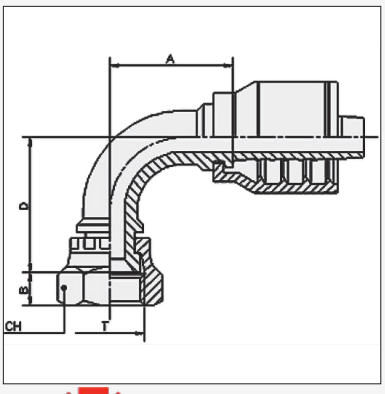

Product Code	JIC Thread			Hose Bore			Dimensions (mm)			
	Thread	Size	Tube	DN	Inch	Size	A	B	CH	D
JFIH9-0704K *	7/16" -20	07	04	6	1/4"	04	28.5	8.5	14.29	26.5
JFIH9-0904K	9/16" - 18	09	06	6	1/4"	04	27.5	9.5	17.46	32
JFIH9-0906K	9/16" - 18	09	06	10	3/8"	06	31	9.5	17.46	32
JFIH9-1206K *	3/4" - 16	12	08	10	3/8"	06	31.5	10.7	22.22	39
JFIH9-1208K *	3/4" - 16	12	08	12	1/2"	08	41	10.7	22.22	42

*** Obsolete - refer to JF9**

PIRTEK

This page is part of a complete catalogue containing technical and safety data.
All data must be reviewed when selecting a product.
Pirtek reserve the right to change technical specifications without notice

JIC FITTINGS
ORIGIN: NORTH AMERICA

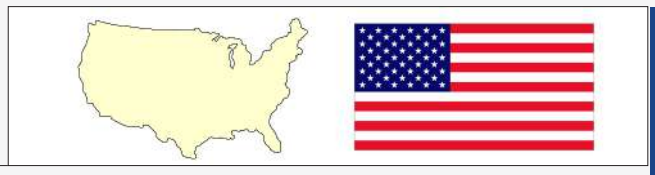

JFCIH9
JIC FEMALE 90° COMPACT ELBOW
IMPERIAL HEX

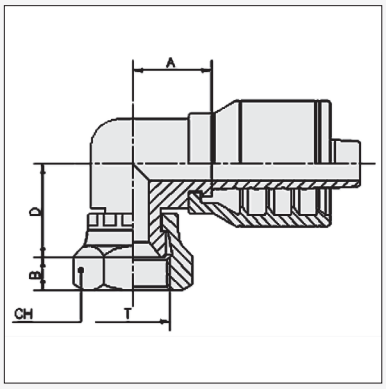

Product Code	JIC Thread			Hose Bore			Dimensions m(m)			
	T (Thread)	Size	T (Tube)	DN	Inch	Size	A	B	CH	D
JFCIH9-0704K*	7/16"-20	07	04	6	1/4"	04	17.5	8.5	14.29	20.5
JFCIH9-0904K	9/16" - 18	09	06	6	1/4"	04	17.5	8.5	17.46	25.5
JFCIH9-0906K	9/16" - 18	09	06	10	3/8"	06	21.5	8.5	17.46	25.5
JFCIH9-1206K*	3/4"-16	12	08	10	3/8"	06	21.5	10.5	22.22	26.5
JFCIH9-1208K*	3/4"-16	12	08	12	1/2"	08	25.5	9.5	22.22	29.5

*** Obsolete - refer to JFC9**

JF1
JIC FEMALE STRAIGHT

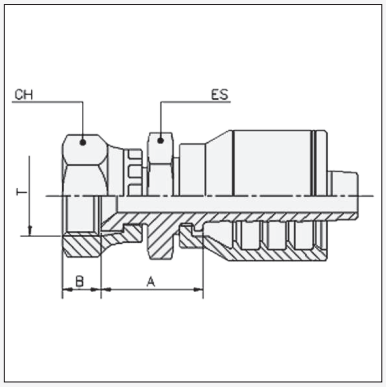

Product Code	JIC Thread			Hose Bore			Dimensions (mm)			
	Thread	Size	Tube	DN	Inch	Size	A	B	CH	ES
JF1-0704K	7/16" - 20	07	04	6	1/4"	04	20.8	8.5	14	14
JF1-0804K	1/2" - 20	08	05	6	1/4"	04	21.5	10.5	17	14
JF1-0904K	9/16" - 18	09	06	6	1/4"	04	23	9.5	19	14
JF1-1204K	3/4"-16	12	08	06	1/4"	04	18.5	10.3	22	--
JF1-0905K	9/16" - 18	09	06	8	5/16"	05	21	9.5	19	14
JF1-0706K	7/16"-20	07	04	10	3/8"	06	22	8.7	14	17
JF1-0906K	9/16" - 18	09	06	10	3/8"	06	24	9.5	19	19
JF1-0906J	9/16" - 18	09	06	10	3/8"	06	24	9.5	17.46	17
JF1-1206K	3/4" - 16	12	08	10	3/8"	06	25.9	10.7	22	19
JF1-1206J	3/4" - 16	12	08	10	3/8"	06	26	10.7	22	19
JF1-1406K	7/8" - 14	14	06	10	3/8"	06	29.3	12.7	27	22
JF1-0708K	7/16" - 20	7	04	12	1/2"	08	26.5	8.7	14	19
JF1-0908K	9/16" - 18	09	06	12	1/2"	08	26.5	9.5	19	19
JF1-1208K	3/4" - 16	12	08	12	1/2"	08	25.4	10.7	22	19
JF1-1208J	3/4" - 16	12	08	12	1/2"	08	26.5	10.7	22	19
JF1-1408K	7/8" - 14	14	10	12	1/2"	08	29.8	12.7	27	22
JF1-1408J	7/8" - 14	14	10	12	1/2"	08	28.5	12.7	27	22
JF1-1708K	1.1/16" - 12	17	12	12	1/2"	08	35.5	13.8	32	27
JF1-1410K	7/8" - 14	14	10	16	5/8"	10	29.8	12.7	27	22
JF1-1410J	7/8" - 14	14	10	16	5/8"	10	28.5	12.7	27	22
JF1-1710K	1.1/16" - 12	17	12	16	5/8"	10	35.5	13.8	32	27
JF1-1710J	1.1/16"-12	17	12	16	5/8"	10	34	14.3	32	27
JF1-1412J	7/8" - 14	14	10	20	3/4"	12	37.8	12.7	32	27
JF1-1712J	1.1/16" - 12	17	12	20	3/4"	12	34.5	14.3	32	27
JF1-1912J	1.3/16" - 12	19	14	20	3/4"	12	37.5	15.4	36	30
JF1-2112J	1.5/16" - 12	21	16	20	3/4"	12	37.5	16	38	32
JF1-1716J	1.1/16" - 12	17	12	25	1"	16	38	14.3	32	32
JF1-2116J	1.5/16" - 12	21	16	25	1"	16	36.6	16	38	32
JF1-2616J †	1.5/8" - 12	26	20	25	1"	16	51.7	16	50	41
JF1-2620J †	1.5/8" - 12	26	20	32	1.1/4"	20	38.5	16	50	41
JF1-3024J †	1.7/8" - 12	30	24	38	1.1/2"	24	56.9	18.5	55	50
JF1-4032J †	2.1/2" - 12	40	32	50	2"	32	74	24	75	65
JF1-4840J †	3" - 12	48	40	63	2.1/2"	40	87.5	20	90	75

† Thrust wired nut

* Available in Stainless Steel, add SS to Part number, eg JF1SS-1710K

JIC FITTINGS

ORIGIN: NORTH AMERICA

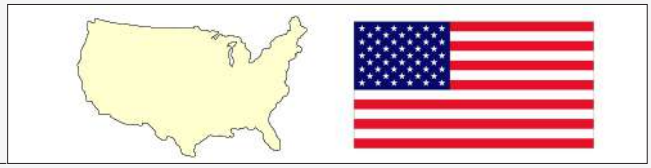

JF4

JIC FEMALE 45° ELBOW

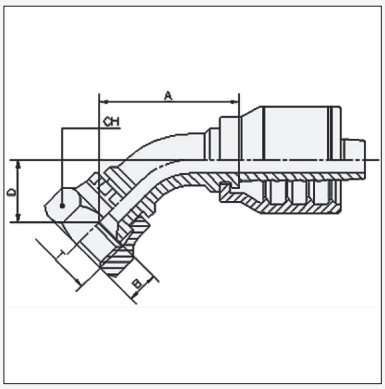

Product Code	JIC Thread			Hose Bore			Dimensions (mm)			
	Thread	Size	Tube	DN	Inch	Size	A	B	CH	D
JF4-0704K	7/16” - 20	07	04	6	1/4”	04	32	8.7	14	11.1
JF4-0804K	1/2” - 20	08	05	6	1/4”	04	34.5	10.5	17	14.8
JF4-0904K	9/16” - 18	09	06	6	1/4”	04	33.1	9.5	19	13.4
JF4-0906K	9/16” - 18	09	06	10	3/8”	06	33.9	9.5	19	12.1
JF4-0906J	9/16" - 18	09	06	10	3/8"	06	33.9	9.5	19	12.1
JF4-1206K	3/4” - 16	12	08	10	3/8”	06	42.5	10.7	22	15
JF4-1206J	3/4" - 16	12	08	10	3/8"	06	42.5	10.7	22	15
JF4-1208K	3/4” - 16	12	08	12	1/2”	08	40.7	10.7	22	13.8
JF4-1208J	3/4" - 16	12	08	12	1/2"	08	40.7	10.7	22	13.8
JF4-1408K	7/8” - 14	14	10	12	1/2”	08	44	12.5	27	16
JF4-1408J	7/8" - 14	14	10	12	1/2"	08	48.5	12.5	27	21.2
JF4-1410K	7/8” - 14	14	10	16	5/8”	10	54	12.7	27	16
JF4-1410J	7/8" - 14	14	10	16	5/8"	10	61.5	12.7	27	25
JF4-1710K	1.1/16” - 12	17	12	16	5/8”	10	60.5	14.3	32	21
JF4-1712J	1.1/16” - 12	17	12	20	3/4”	12	71.6	13.8	32	28.3
JF4-2112J	1.5/16” - 12	21	16	20	3/4”	12	69	16	38	29.5
JF4-2116J	1.5/16” - 12	21	16	25	1”	16	85	16	38	32
JF4-2620J †	1.5/8” - 12	26	20	32	1.1/4”	20	99.4	16	50	36.3
JF4-3024J †	1.7/8” - 12	30	24	38	1.1/2”	24	132.4	18.5	55	51.5
JF4-4032J †	2.1/2” - 12	40	32	50	2”	32	147.5	24	75	60

† Thrust wired nut

* Available in Stainless Steel, add SS to Part number, eg JF4SS-1208K

PIRTEK

This page is part of a complete catalogue containing technical and safety data.
All data must be reviewed when selecting a product.
Pirtek reserve the right to change technical specifications without notice

JIC FITTINGS

ORIGIN: NORTH AMERICA

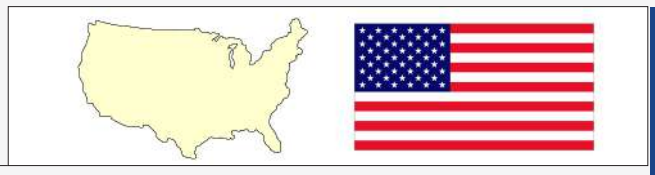

JF9

JIC FEMALE 90° ELBOW

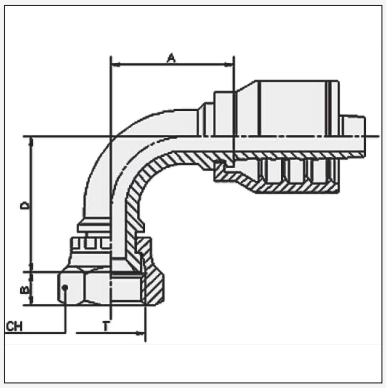

Product Code	JIC Thread			Hose Bore			Dimensions (mm)			
	Thread	Size	Tube	DN	Inch	Size	A	B	D	CH
JF9-0704K	7/16" - 20	07	04	6	1/4"	04	32	8.5	30	14
JF9-0704K-046	7/16" - 20	07	04	6	1/4"	04	32	8.5	46	14
JF9-0804K	1/2" - 20	08	05	6	1/4"	04	29	10.5	30	17
JF9-0904K	9/16" - 18	09	06	6	1/4"	04	27.5	9.5	27.5	19
JF9-0904K-056	9/16" - 18	09	06	6	1/4"	04	27.5	9.5	56	19
JF9-0906K	9/16" - 18	09	06	10	3/8"	06	31	9.5	22	19
JF9-0906K-056	9/16" - 18	09	06	10	3/8"	06	35.5	9.5	56	19
JF9-0906J	9/16" - 18	09	06	10	3/8"	06	27.8	9.5	23	19
JF9-1206K	3/4" - 16	12	08	10	3/8"	06	31.5	10.7	30	22
JF9-1206K-062	3/4" - 16	12	08	10	3/8"	06	37.1	10.7	62	22
JF9-1206J	3/4" - 16	12	08	10	3/8"	06	35	10.7	30	22
JF9-1406K	7/8" - 14	14	10	10	3/8"	06	37.1	12.5	38	27
JF9-1208K	3/4" - 16	12	08	12	1/2"	08	41	10.7	30	22
JF9-1208K-048	3/4" - 16	12	08	12	1/2"	08	40.5	10.7	48	22
JF9-1208K-062	3/4" - 16	12	08	12	1/2"	8	39.5	10.7	62	22
JF9-1208J	3/4" - 16	12	08	12	1/2"	08	41.8	10.7	30	22
JF9-1408K	7/8" - 14	14	10	12	1/2"	08	42.5	12.5	40	27
JF9-1408J	7/8" - 14	14	10	12	1/2"	08	36.8	12.5	40.5	27
JF9-1408K-065	7/8" - 14	14	10	12	1/2"	08	48.5	12.5	65	27
JF9-1410K	7/8" - 14	14	10	16	5/8"	10	47.5	12.7	32	27
JF9-1410K-065	7/8" - 14	14	10	16	5/8"	10	43.5	12.7	65	27
JF9-1410J	7/8" - 14	14	10	16	5/8"	10	54	12.7	52	27
JF9-1708K	1.1/16" - 12	17	12	12	1/2"	08	48.5	13.8	52	32
JF9-1710K	1.1/16" - 12	17	12	16	5/8"	10	48.5	13.8	47.5	32
JF9-1710K-095	1.1/16" - 12	17	12	16	5/8"	10	55.5	12.7	95	32
JF9-1710J	1.1/16"-12	17	12	16	5/8"	10	54	13.8	55	32
JF9-1412J	7/8" - 14	14	10	20	3/4"	12	56	12.7	55	27
JF9-1712J	1.1/16" - 12	17	12	20	3/4"	12	55.5	13.5	48	32
JF9-1712J-095	1.1/16" - 12	21	16	25	1"	16	81	16	95	38
JF9-2112J	1.5/16" - 12	21	16	20	3/4"	12	57	16	61	38
JF9-2116J	1.5/16" - 12	21	16	25	1"	16	72	16	71	38
JF9-2116J-110	1.5/8" - 12	26	20	32	1.1/4"	20	91.5	16	110	50
JF9-2616J	1.5/8" - 12	26	20	25	1"	16	74.5	16	75.5	50
JF9-2620J †	1.5/8" - 12	26	20	32	1.1/4"	20	81	16	80	50
JF9-2620J-110 †	1.5/8" - 12	26	20	32	1.1/4"	20	91.5	16	110	50
JF9-2620J-129 †	1.5/8" - 12	26	20	32	1.1/4"	20	85.5	16	129	50
JF9-3024J †	1.7/8" - 12	30	24	38	1.1/2"	24	103	18.5	102	55
JF9-4032J †	2.1/2" - 12	40	32	50	2"	32	130	24	133	70

† Thrust wired nut * Available in Stainless Steel, add SS to Part number, eg JF9SS-0904K

JFC4

JIC FEMALE 45° COMPACT ELBOW

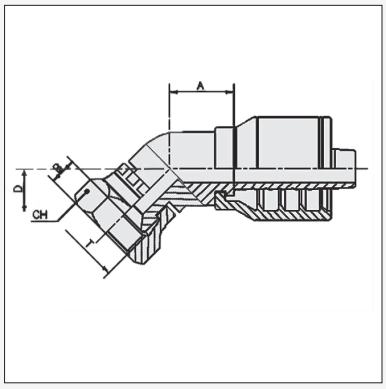

Product Code	JIC Thread			Hose Bore			Dimensions (mm)			
	Thread	Size	Tube	DN	Inch	Size	A	B	D	CH
JFC4-0704K	7/16" - 20	07	04	6	1/4"	04	17.5	8.5	13.0	14
JFC4-0904K	9/16" - 18	09	06	6	1/4"	04	17.5	8.5	10.0	19
JFC4-0906K	9/16" - 18	09	06	10	3/8"	06	21.5	8.5	12.0	19
JFC4-1206K	3/4" - 16	12	08	10	3/8"	06	21.5	10.5	10.8	22
JFC4-1208K	3/4" - 16	12	08	12	1/2"	08	25.5	9.5	15.0	22
JFC4-1408K	7/8" - 14	14	10	12	1/2"	08	25.5	13	13.0	27
JFC4-1410K	7/8" - 14	14	10	16	5/8"	10	25.5	13	14.7	27
JFC4-1712J	1.1/16" - 12	17	12	20	3/4"	12	52	13.5	15.0	32
JFC4-2116J	1.5/16" - 12	21	16	25	1"	16	72	16	18.0	38

JIC FITTINGS

ORIGIN: NORTH AMERICA

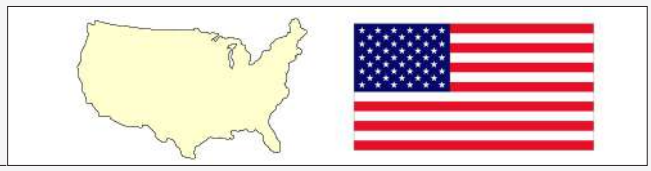

JFC9

JIC FEMALE 90° COMPACT ELBOW

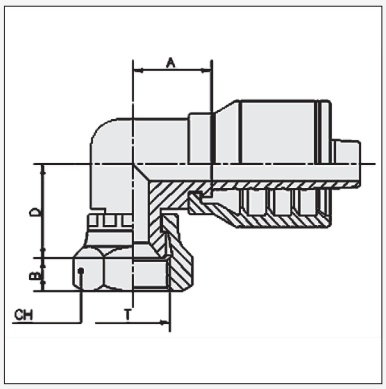

Product Code	JIC Thread			Hose Bore			Dimensions (mm)			
	Thread	Size	Tube	DN	Inch	Size	A	B	D	CH
JFC9-0704K	7/16” - 20	07	04	6	1/4”	04	17.5	8.5	20.5	14
JFC9-0904K	9/16” - 18	09	06	6	1/4”	04	17.5	8.5	25.5	19
JFC9-0906K	9/16” - 18	09	06	10	3/8”	06	21.5	8.5	25.5	19
JFC9-1206K	3/4” - 16	12	08	10	3/8”	06	24.0	10.5	26.5	22
JFC9-1208K	3/4” - 16	12	08	12	1/2”	08	25.5	9.5	29.5	22
JFC9-1408K	7/8” - 14	14	10	12	1/2”	08	25.5	13	28	27
JFC9-1410K	7/8” - 14	14	10	16	5/8”	10	25.5	13	28	27
JFC9-1710K	1.1/16” - 12	17	12	16	5/8”	10	25.5	14.5	28	32
JFC9-1712J	1.1/16” - 12	17	12	20	3/4”	12	28.5	13.5	30.7	32
JFC9-2116J	1.5/16” - 12	21	16	25	1”	16	32	16	33.5	38

JM1

JIC MALE STRAIGHT

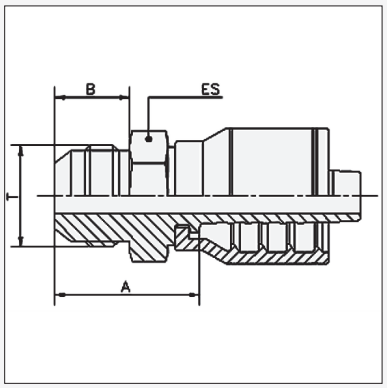

"Product Code"	JIC Thread			Hose Bore			Dimensions mm			
	Thread	Size	Tube	DN	Inch	Size	A	B	ES	
JM1-0704K	7/16" - 20	07	04	6	1/4"	04	26.5	14	14	
JM1-0804K	1/2" - 20	08	05	6	1/4"	04	26.5	14	14	
JM1-0904K	9/16" - 18	09	06	6	1/4"	04	27.5	14	17	
JM1-1204K	3/4" - 16	12	08	6	1/4"	04	30.5	16.7	19	
JM1-0905K	9/16" - 18	09	06	8	5/16"	05	27.5	14	17	
JM1-0906K	9/16" - 18	09	06	10	3/8"	06	27.5	14	17	
JM1-0906J	9/16" - 18	09	06	10	3/8"	06	27.5	14	17	
JM1-1206K	3/4" - 16	12	08	10	3/8"	06	30.2	16.7	19	
JM1-1206J	3/4" - 16	12	08	10	3/8"	06	30.4	16.7	19	
JM1-1406K	7/8" - 14	14	10	10	3/8"	06	34.8	19.3	24	
JM1-1208K	3/4" - 16	12	08	12	1/2"	08	30.7	16.7	19	
JM1-1208J	3/4" - 16	12	08	12	1/2"	08	32.4	16.7	19	
JM1-1408K	7/8" - 14	14	10	12	1/2"	08	34.9	19.3	24	
JM1-1408J	7/8" - 14	14	10	12	1/2"	08	36	19.3	24	
JM1-1708K	1.1/16" - 12	17	12	12	1/2"	08	38.9	21.9	27	
JM1-1410K	7/8" - 14	14	10	16	5/8"	10	35.3	19.3	24	
JM1-1710K	1.1/16" - 12	17	12	16	5/8"	10	38.9	21.9	27	
JM1-1710J	1.1/16" - 12	17	12	16	5/8"	10	39	21.9	27	
JM1-1412J	7/8" - 14	14	10	20	3/4"	12	44	19.3	27	
JM1-1712J	1.1/16" - 12	17	12	20	3/4"	12	40.9	21.9	27	
JM1-1912J	1.3/16" - 12	19	14	20	3/4"	12	46.6	22.6	32	
JM1-2112J	1.5/16" - 12	21	16	20	3/4"	12	47.1	23.1	36	
JM1-2116J	1.5/16" - 12	21	16	25	1"	16	48.2	23.1	36	
JM1-2616J	1.5/8" - 12	26	20	25	1"	16	59.9	24.3	46	
JM1-2620J	1.5/8" - 12	26	20	32	1.1/4"	20	62.7	24.3	46	
JM1-3024J	1.7/8" - 12	30	24	38	1.1/2"	24	66	27.5	50	
JM1-4032J	2.1/2" - 12	40	32	50	2"	32	84.6	33.9	65	

PIRTEK

This page is part of a complete catalogue containing technical and safety data.
All data must be reviewed when selecting a product.
Pirtek reserve the right to change technical specifications without notice

SAE FITTINGS
ORIGIN: NORTH AMERICA

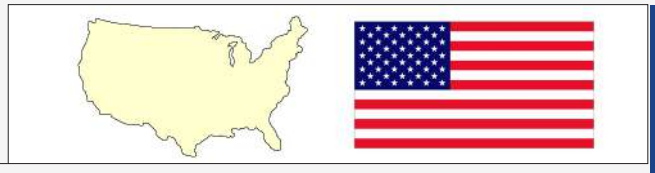

UNMS1
UN'O' MALE STRAIGHT

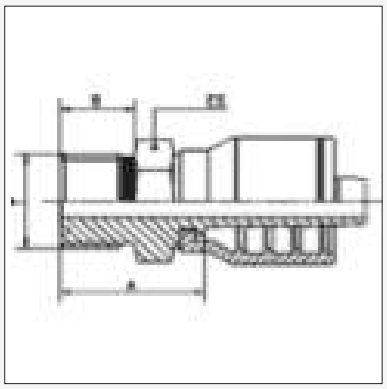

Product Code	UN'O' Thread			Nominal ID			Dimensions mm		
	Thread E	Size	Pipe	Dash	Inch	DN	A	B	ES
UNMS1-1410K	7/8" - 14	14	10	10	5/8"	16	50	12	26

UNMS9
UNO MALE 90° SWIVEL ELBOW

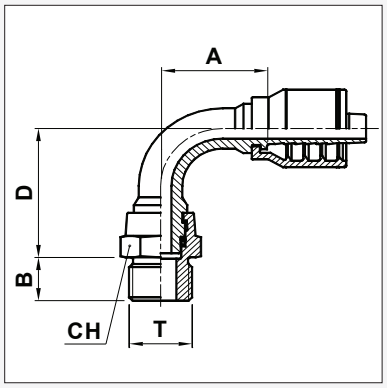

Product Code	UNO Thread			Hose Bore			Dimensions (mm)			
	Thread	Size	Tube	DN	Inch	Size	A	B	CH	D
UNMS9-1206K	3/4" - 16	12	08	10	3/8"	06	34.5	11.1	27	52.4
UNMS9-1208K	3/4" - 16	12	08	12	1/2"	08	44.5	11.1	27	57.4
UNMS9-1408K	7/8" - 14	14	10	12	1/2"	08	44.5	12.7	27	58.8

UNMC9
UNO MALE 90º COMPACT SWIVEL ELBOW

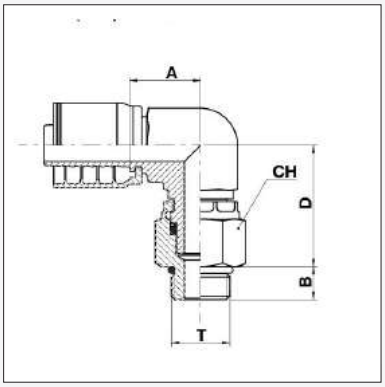

Product Code	UNO Thread			Hose Bore			Dimensions (mm)			
	Thread	Size	Tube	DN	Inch	Size	A	B	D	CH
UNMC9-1408K	7/8" - 14	14	10	12	1/2"	8	26.5	12.7	48.8	27

SAE FITTINGS
ORIGIN: NORTH AMERICA

SF1
SAE FEMALE STRAIGHT

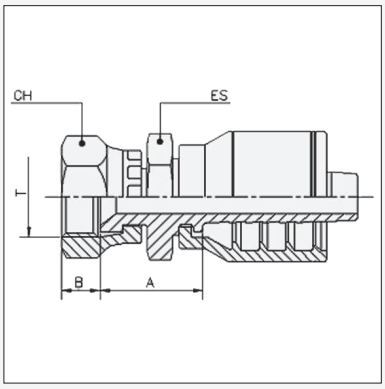

Product Code	SAE Thread			Hose Bore			Dimensions (mm)			
	Thread	Size	Tube	DN	Inch	Size	A	B	CH	ES
SF1-1004K	5/8" - 18	10	06	6	1/4"	04	23.9	10.8	22	19
SF1-1006K	5/8" - 18	10	06	10	3/8"	06	23.9	10.8	22	19
SF1-1712J	1.1/16" - 14	17	12	20	3/4"	12	31.2	14.4	32	27

SF9
SAE FEMALE 90° ELBOW

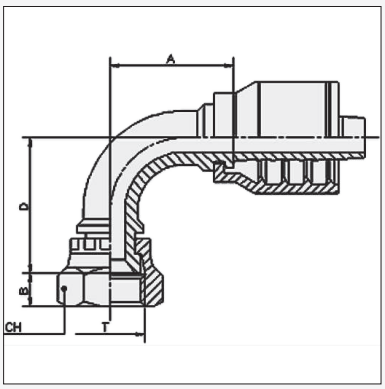

Product Code	SAE Thread			Hose Bore			Dimensions (mm)			
	Thread	Size	Tube	DN	Inch	Size	A	B	D	CH
SF9-1006K	5/8" - 18	10	06	10	3/8"	06	37	10.8	37	22

SM1
SAE MALE STRAIGHT

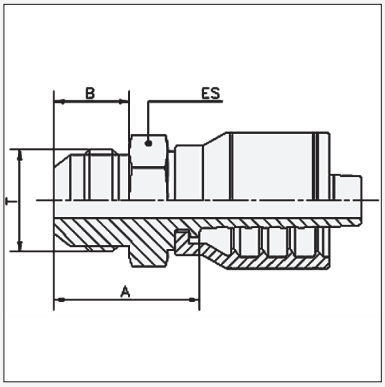

Product Code	SAE Thread			Hose Bore			Dimensions (mm)			
	T (Thread)	Size	Tube	DN	Inch	Size	A	B	ES	
SM1-1006K	5/8" - 18	10	06	10	3/8"	06	29.2	15.7	17	

This page is part of a complete catalogue containing technical and safety data.
All data must be reviewed when selecting a product.
Pirtek reserve the right to change technical specifications without notice

ORFS FITTINGS
ORIGIN: NORTH AMERICA

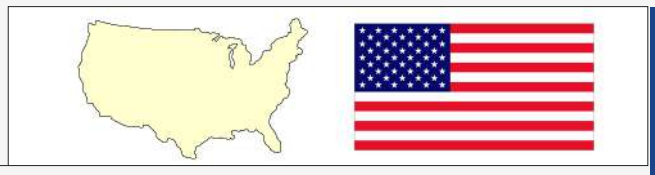

OF1*
O-RING FACE SEAL FEMALE STRAIGHT

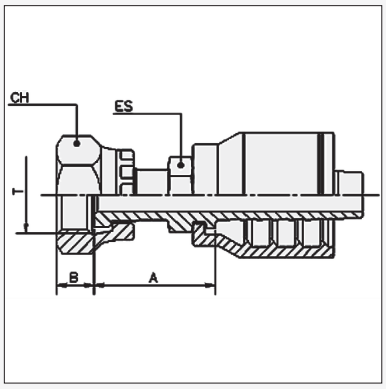

Product Code	UN Thread			Hose Bore			Dimensions (mm)			
	Thread	Size	Tube	DN	Inch	Size	A	B	CH	ES
OF1-0404K	9/16" - 18	04	04	6	1/4"	04	28	8	17	14
OF1-0604K	11/16" - 16	06	06	6	1/4"	04	31.5	9.5	22	17
OF1-0804K	13/16" - 16	08	08	6	1/4"	04	36.5	11	24	19
OF1-0406K	9/16 - 18	4	4	10	3/8"	06	30.5	8	17	17
OF1-0606K	11/16" - 16	06	06	10	3/8"	06	32	9.5	22	17
OF1-0806K	13/16" - 16	08	08	10	3/8"	06	36.5	11	24	19
OF1-0806J	13/16" - 16	08	08	10	3/8"	6	36.5	11	24	19
OF1-0808K	13/16" - 16	08	08	12	1/2"	08	35	11	24	19
OF1-0808J	13/16" - 16	08	08	12	1/2"	08	35	11	24	19
OF1-1008K	1" - 14	10	10	12	1/2"	08	39	13.5	30	24
OF1-1208K	1.3/16" - 12	12	12	12	1/2"	08	44.13	14.5	36	30
OF1-1010K	1" - 14	10	10	16	5/8"	10	39.1	13.5	30	24
OF1-1010J	1" - 14	10	10	16	5/8"	10	39	13.5	30	24
OF1-1210K	1.3/16" - 12	12	12	16	5/8"	08	44.13	14.5	36	30
OF1-1210J	1.3/16"-12	12	12	16	5/8"	10	44.13	14.5	36	30
OF1-1012J	1"-14	10	10	19	3/4"	12	42	13	30	27
OF1-1212J	1.3/16" - 12	12	12	20	3/4"	12	46	14.5	36	30
OF1-1612J	1.7/16" - 12	16	16	20	3/4"	12	53	14.8	41	36
OF1-1216J	1.3/16"-12	12	12	25	1"	16	51	14.5	36	36
OF1-1616J	1.7/16" - 12	16	16	25	1"	16	54.1	14.8	41	36
OF1-2016J	1.11/16" - 12	20	20	25	1"	16	56.1	14.8	50	41
OF1-2020J	1.11/16" - 12	20	20	32	1.1/4"	20	55.9	14.8	50	41
OF1-2420J	2" - 12	24	24	32	1.1/4"	20	63.1	14.8	60	50
OF1-2424J	2" -12	24	24	25	1.1/2"	24	61.2	14.8	60	50
OF1-3232J	2.1/2" - 12	32	32	50	2"	32	100.5	17	75	65

* For data pertaining to these fittings when equipped with metric threads, as commonly encountered on equipment of Chinese origin, please refer to Product Code **MOF1** on page C 27 of this catalogue

OM1
O-RING FACE SEAL MALE STRAIGHT

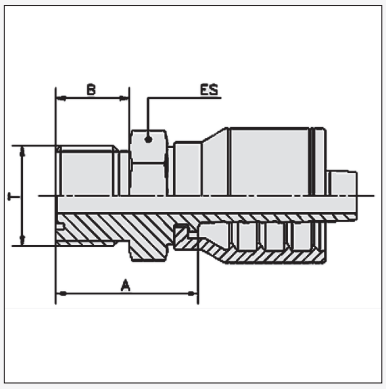

Product Code	UN Thread			Hose Bore			Dimensions (mm)			
	Thread	Size	Tube	DN	Inch	Size	A	B	ES	
OM1-0404K	9/16" - 18	04	04	6	1/4"	04	24.3	9.8	15	
OM1-0604K	11/16" - 16	6	06	6	1/4"	04	26.5	11.2	19	
OM1-0606K	11/16" - 16	06	06	10	3/8"	06	26.7	11.2	19	
OM1-0806K	13/16" - 16	08	08	10	3/8"	06	29	12.8	22	
OM1-0808K	13/16" - 16	08	08	12	1/2"	08	29.6	12.8	22	
OM1-1008K	1" - 14	10	10	12	1/2"	08	34.1	15.5	27	
OM1-1010K	1" - 14	10	10	16	5/8"	10	31.4	15.5	27	
OM1-1210K	1.3/16" - 12	12	12	16	5/8"	10	37.1	17	32	
OM1-1212J	1.3/16" - 12	12	12	20	3/4"	12	39.1	17	32	
OM1-1612J	1.7/16"-12	16	16	19	3/4"	12	40.8	17.5	41	
OM1-1616J	1.7/16" - 12	16	16	25	1"	16	41.9	17.5	41	
OM1-2016J	1.11/16" - 12	20	20	25	1"	16	72	17.5	46	
OM1-2020J	1.11/16" - 12	20	20	32	1.1/4"	20	45.4	17.5	46	

PIRTEK

This page is part of a complete catalogue containing technical and safety data.
All data must be reviewed when selecting a product.
Pirtek reserve the right to change technical specifications without notice

ORFS FITTINGS

ORIGIN: NORTH AMERICA

OF3

O-RING FACE SEAL FEMALE 30° ELBOW

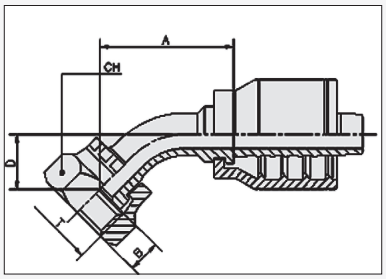

Product Code	UN Thread			Hose Bore			Dimensions (mm)			
	Thread	Size	Tube	DN	Inch	Size	A	B	D	CH
OF3-1212J	1.3/16” - 12	12	12	20	3/4”	12		14.5		36

OF4

O-RING FACE SEAL FEMALE 45° ELBOW

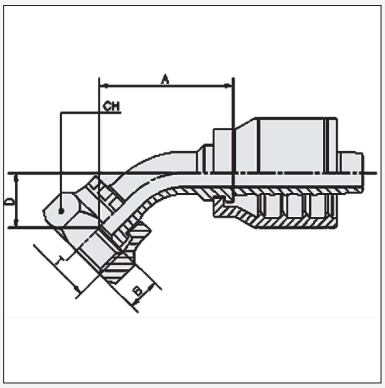

Product Code	UN Thread			Hose Bore			Dimensions (mm)			
	Thread	Size	Tube	DN	Inch	Size	A	B	D	CH
OF4-0404K	9/16” - 18	04	04	6	1/4”	04	43.5	8	11	17
OF4-0604K	11/16” - 16	06	06	6	1/4”	04	36	9.5	15	22
OF4-0606K	11/16” - 16	06	06	10	3/8”	06	47.5	9.5	15	22
OF4-0606J	11/16" - 16	06	06	10	3/8"	06	35.5	9.5	11	22
OF4-0806K	13/16” - 16	08	08	10	3/8”	06	43.5	11	15	24
OF4-0608K	11/16" - 16	06	06	12	1/2"	08	49	9.5	15.8	22
OF4-0808K	13/16” - 16	08	08	12	1/2”	08	56.5	11	14	24
OF4-0808J	13/16"-16	08	08	12	1/2"	08	43	11	14	24
OF4-1208K	1.3/16" -12	12	12	12	1/2"	08	54.5	14.5	20	36
OF4-1010K	1” - 14	10	10	16	5/8”	10	56.5	13.5	21	30
OF4-1012J	1" - 14	10	10	20	3/4"	12	67.5	13.5	15	30
OF4-1212J	1.3/16” - 12	12	12	20	3/4”	12	65.4	14.5	23.2	36
OF4-1612J	1.7/16" - 12	16	16	20	3/4"	12	63	14.8	24	41
OF4-1616J	1.7/16” - 12	16	16	25	1”	16	84	14.8	31	41
OF4-2020J	1.11/16” - 12	20	20	32	1.1/4”	20	95.4	14.8	36.3	50
OF4-2424J	2” - 12	24	24	38	1.1/2”	24	124.6	14.8	47.2	60

PIRTEK

This page is part of a complete catalogue containing technical and safety data.
All data must be reviewed when selecting a product.
Pirtek reserve the right to change technical specifications without notice

ORFS FITTINGS
ORIGIN: NORTH AMERICA

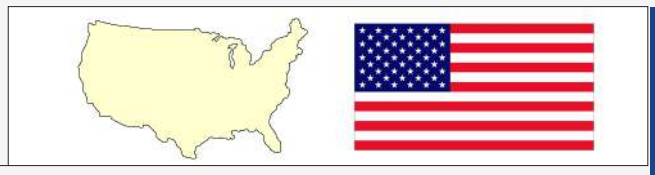

OF9
O-RING FACE SEAL FEMALE 90° ELBOW

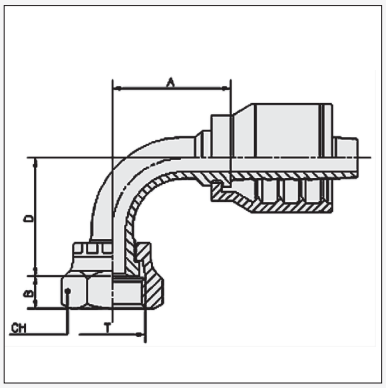

Product Code	UN Thread			Hose Bore			Dimensions (mm)			
	Thread	Size	Tube	DN	Inch	Size	A	B	D	CH
OF9-0404K	9/16" - 18	04	04	6	1/4"	04	29	8	22.5	17
OF9-0404K-046	9/16" - 18	04	04	6	1/4"	04	29	8	46	17
OF9-0604K	11/16" - 16	06	06	6	1/4"	04	27	9.5	25	22
OF9-0606K	11/16" - 16	06	06	10	3/8"	06	32.5	9.5	28	22
OF9-0606K-038	11/16" - 16	06	06	10	3/8"	06	31.5	9.5	38	22
OF9-0606K-054	11/16" - 16	06	06	10	3/8"	06	32.5	9.5	54	22
OF9-0606J	11/16" - 16	06	06	10	3/8"	06	31.5	9.5	25	22
OF9-0606J-054	11/16" - 16	06	06	10	3/8"	06	31.5	9.5	54	22
OF9-0806K	13/16" - 16	08	08	10	3/8"	06	33	11	30	24
OF9-0808K	13/16" - 16	08	08	12	1/2"	08	40.5	11	32	24
OF9-0808K-041	13/16" - 16	08	08	12	1/2"	8	40	11	41	24
OF9-0808K-064	13/16" - 16	08	08	12	1/2"	08	41.5	11	64	24
OF9-0808J	13/16" - 16	08	08	12	1/2"	08	43.3	11	30	24
OF9-0808J-041	13/16" - 16	08	08	12	1/2"	08	40	11	41	24
OF9-1008K	1" - 14	10	10	12	1/2"	08	44	13.5	34	30
OF9-1008K-070	1" - 14	10	10	12	1/2"	08	55	13.5	70	30
OF9-1208K	1.3/16" - 12	12	12	12	1/2"	08	56.5	14.5	39	36
OF9-1010K	1" - 14	10	10	16	5/8"	10	56	13.5	44	30
OF9-1010K-070	1" - 14	10	10	16	5/8"	10	55	13.5	70	30
OF9-1010J	1" - 14	10	10	16	5/8"	10	55	12	44	30
OF9-1010J-100	1" - 14	10	10	16	5/8"	10	55	12	100	30
OF9-1210K	1.3/16" - 12	12	12	16	5/8"	10	56.5	14.5	48	36
OF9-1012J	1" - 14	10	10	20	3/4"	12	50.5	13.5	32	30
OF9-1212J	1.3/16" - 12	12	12	20	3/4"	12	61	14.5	48	36
OF9-1212J-058	1.3/16" - 12	12	12	20	3/4"	12	61	14.5	58	36
OF9-1212J-096	1.3/16" - 12	12	12	20	3/4"	12	61	14.5	96	36
OF9-1612J	1.7/16" - 12	16	16	20	3/4"	12	61	14.8	50	41
OF9-1612J-114	1.7/16" - 12	16	16	20	3/4"	12	61	14.8	114	41
OF9-1216J	1.3/16" - 12	12	12	25	1"	16	63	14.5	48.5	36
OF9-1616J	1.7/16" - 12	16	16	25	1"	16	73	14.8	59	41
OF9-1616J-071	1.7/16" - 12	16	16	25	1"	16	74	13.7	71	41
OF9-1616J-114	1.7/16" - 12	16	16	25	1"	16	73	14.8	114	41
OF9-1616J-126	1.7/16" - 12	16	16	25	1"	16	70.3	13.8	126	41
OF9-2016J	1.11/16" - 12	20	20	25	1"	16	73	14.8	77	50
OF9-2020J	1.11/16" - 12	20	20	32	1.1/4"	20	84.4	14.8	77	50
OF9-2020J-129	1.11/16"-12	20	20	32	1.1/4"	20	86.5	14.8	129	50
OF9-2424J	2" - 12	24	24	38	1.1/2"	24	102	14.8	94	60
OF9-3232J	2.1/2"	32	32	50	2"	32	130.5	17	140	75

This page is part of a complete catalogue containing technical and safety data.
All data must be reviewed when selecting a product.
Pirtek reserve the right to change technical specifications without notice

METRIC FITTINGS

ORIGIN: GERMANY

DMSF1

METRIC MULTISEAL FEMALE 24°/60° STRAIGHT

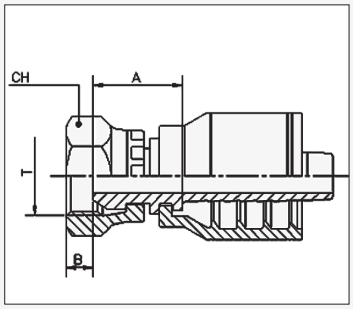

Product Code	Metric Thread			Hose Bore			Dimensions (mm)			
	Thread	Size	Tube	DN	Inch	Size	A	B	CH	
DMSF1-1404K	M14 x 1.5	14	8 L	6	1/4”	04	20.5	3.5	17	
DMSF1-1604K	M16 x 1.5	16	10 L	6	1/4”	04	20	5	19	
DMSF1-1606K	M16 x 1.5	16	10 L	10	3/8”	06	20	5	19	
DMSF1-1806K	M18 x 1.5	18	12 L	10	3/8”	06	21	5	22	
DMSF1-2208K	M22 x 1.5	22	15 L	12	1/2”	08	23.5	5	27	

These fittings are commonly found on Eurpoean pressure cleaners and on forklifts / small mobile equipment of Chinese origin

DMSF9

METRIC MULTISEAL 24º/60 FEMALE 90º

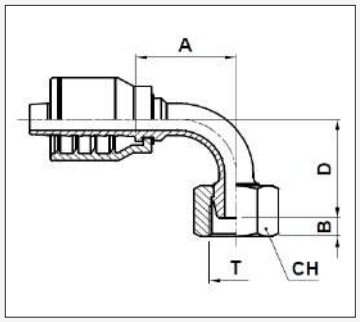

Product Code	Metric Thread			Hose Bore			Dimensions (mm)			
	T	Size	Tube	DN	INCH	SIZE	A	B	D	CH
DMSF9-1404K	M14X1.5	14	8 L	6	1/4"	04	28.5	3.5	30.0	17
DMSF9-1604K	M16X1.5	16	10 L	6	1/4"	04	29.5	5.0	30.0	19
DMSF9-1606K	M16X1.5	16	10 L	10	3/8"	06	35.5	5.0	33.5	22
DMSF9-1806K	M18X1.5	18	12 L	10	3/8"	06	32.0	5.0	35.5	22

DLM1

DKL (LIGHT) METRIC 24° MALE STRAIGHT

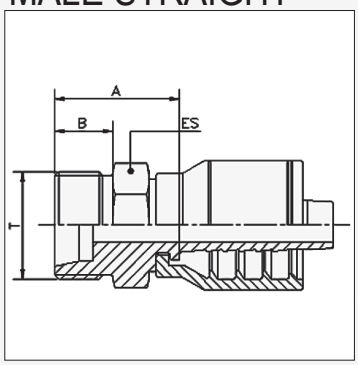

Product Code	Metric Thread			Hose Bore			Dimensions (mm)			
	Thread	Size	Tube	DN	Inch	Size	A	B	ES	
DLM1-1204K	M12 x 1.5	12	6 L	6	1/4”	04	22.5	10	14	
DLM1-1404K	M14 x 1.5	14	8 L	6	1/4”	04	22.5	10	14	
DLM1-1604K	M16 x 1.5	16	10 L	06	1/4”	04	24.5	11	17	
DLM1-1605K	M16 x 1.5	16	10 L	08	5/16””	05	24.5	11	17	
DLM1-1606K	M16 x 1.5	16	10 L	10	3/8”	06	24.5	11	17	
DLM1-1804K	M18 x 1.5	18	12 L	06	1/4”	04	25	11	19	
DLM1-1806K	M18 x 1.5	18	12 L	10	3/8”	06	25	11	19	
DLM1-2208K	M22 x 1.5	22	15 L	12	1/2”	08	26.5	12	22	
DLM1-2608K	M26 x 1.5	26	18L	12	1/2"	08	29	12	27	
DLM1-2610K	M26 x 1.5	26	18 L	16	5/8”	10	29	12	27	
DLM1-3012J	M30 x 2	30	22 L	20	3/4”	12	35	14	30	
DLM1-3612J	M36 x 2	36	28 L	25	3/4"	12	31	14	36	
DLM1-3616J	M36 x 2	36	28 L	25	1”	16	35.1	14	36	
DLM1-4520J	M45x2	45	35L	32	1.1/4"	20	41	16	46	
DLM1-5224J	M52X2	52	42L	40	1.1/2”	24	44	16	55	

PIRTEK

This page is part of a complete catalogue containing technical and safety data.
All data must be reviewed when selecting a product.
Pirtek reserve the right to change technical specifications without notice

METRIC FITTINGS
ORIGIN: GERMANY

DLF1
DKL (LIGHT) METRIC 24° FEMALE STRAIGHT

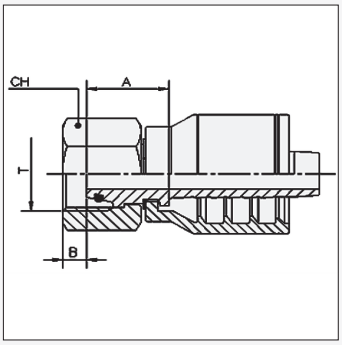

Product Code	Metric Thread			Hose Bore			Dimensions (mm)			
	Thread	Size	Tube	DN	Inch	Size	A	B	CH	
DLF1-1204K	M12 x 1.5	12	6 L	6	1/4”	04	20.9	2.6	16	
DLF1-1404K	M14 x 1.5	14	8 L	6	1/4”	04	25	1.5	17	
DLF1-1604K	M16 x 1.5	16	10L	6	1/4”	04	26.5	1.5	19	
DLF1-1605K	M16 x 1.5	16	10 L	08	5/16””	05	26.5	1.5	19	
DLF1-1606K	M16 x 1.5	16	10 L	10	3/8”	06	23	3.5	22	
DLF1-1804K	M18 x 1.5	18	12 L	6	1/4”	04	26	1.5	22	
DLF1-1806K	M18 x 1.5	18	12 L	10	3/8”	06	26	1.5	22	
DLF1-2206K	M22 x 1.5	22	15 L	10	3/8”	06	27.5	2.5	27	
DLF1-2208K	M22 x 1.5	22	15 L	12	1/2”	08	28.5	2.5	27	
DLF1-2608K	M26 x 1.5	26	18L	12	1/2"	08	30	2	32	
DLF1-2610K	M26 x 1.5	26	18 L	16	5/8”	10	29	2	32	
DLF1-2612J	M26x1,5	26	L18	19	3/4"	12	25,5	2	32	
DLF1-3012J	M30 x 2	30	22 L	20	3/4”	12	31	3.5	36	
DLF1-3016J	M30 x 2	30	22 L	25	1"	16	29.5	3.5	36	
DLF1-3616J	M36 x 2	36	28 L	25	1”	16	32.1	3.5	41	
DLF1-4520J	M45 x 2	45	35 L	32	1.1/4”	20	41.4	2	50	
DLF1-5224J	M52 x 2	52	42 L	38	1.1/2”	24	39.5	3	60	

DLF4
DKL (LIGHT) METRIC 24° FEMALE 45° ELBOW

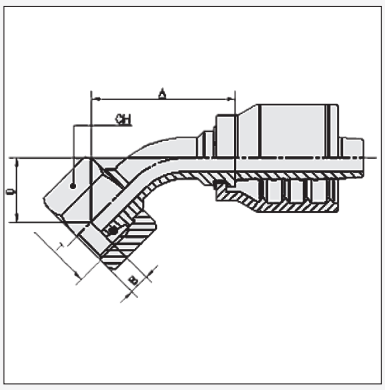

Product Code	Metric Thread			Hose Bore			Dimensions (mm)			
	Thread	Size	Tube	DN	Inch	Size	A	B	D	CH
DLF4-1204K	M12 x 1.5	12	6 L	6	1/4”	04	38.5	2.6	18	16
DLF4-1404K	M14 x 1.5	14	8 L	6	1/4”	04	35.2	1.5	15.5	17
DLF4-1605K	M16 x 1.5	16	10L	8	5/16”	05	41.5	1.5	19	19
DLF4-1606K	M16 x 1.5	16	10 L	10	3/8”	06	50.5	1.5	19	22
DLF4-1806K	M18 x 1.5	18	12 L	10	3/8”	06	42.6	1.5	19	22
DLF4-2206K	M22 x 1.5	22	15L	10	3/8"	06	45	2.5	22.1	27
DLF4-2208K	M22 x 1.5	22	15 L	12	1/2”	08	52.5	2.5	23	27
DLF4-2610K	M26 x 1.5	26	18 L	16	5/8”	10	69.5	2	27.2	32
DLF4-2612J	M26x1,5	26	L18	19	3/4"	12	70	2	28.8	32
DLF4-3012J	M30 x 2	30	22 L	20	3/4”	12	76.7	3.5	32	36
DLF4-3016J	M30 x 2	30	22 L	25	1"	16	67.5	3.5	28.3	36
DLF4-3616J	M36 x 2	36	28 L	25	1”	16	91.6	3.5	35.5	41

DLF9
DKL (LIGHT) METRIC 24° FEMALE 90° ELBOW

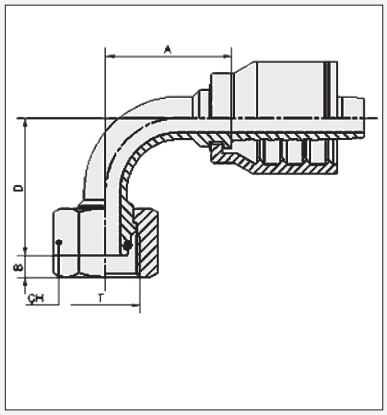

Product Code	Metric Thread			Hose Bore			Dimensions (mm)			
	Thread	Size	Tube	DN	Inch	Size	A	B	D	CH
DLF9-1204K	M12 x 1.5	12	6 L	06	1/4”	04	27.5	2.36	37	16
DLF9-1404K	M14 x 1.5	14	8 L	06	1/4”	04	29.5	1.5	37.6	17
DLF9-1605K	M16 x 1.5	16	10L	08	5/16”	05	31.5	1.5	35.5	19
DLF9-1606K	M16 x 1.5	16	10 L	10	3/8”	06	65	1.5	37	22
DLF9-1804K	M18 x 1.5	18	12 L	06	1/4”	04		1.5		22
DLF9-1806K	M18 x 1.5	18	12 L	10	3/8”	06	32	1.5	39	22
DLF9-2206K	M22 x 1.5	22	15L	10	3/8"	06	31.5	2.5	40	27
DLF9-2208K	M22 x 1.5	22	15 L	12	1/2”	08	39	2.5	45	27
DLF9-2608K	M26 x 1.5	26	18L	12	1/2"	08	39	2	49	32
DLF9-2610K	M26 x 1.5	26	18 L	16	5/8”	10	57.5	2	56	32
DLF9-2612J	M26x1.5	26	L18	19	3/4"	12	55.5	2	57.7	32
DLF9-3012J	M30 x 2	30	22 L	19	3/4”	12	72.7	3.5	67.5	36
DLF9-3016J	M30 x 2	30	22 L	25	1"	16	62	3.5	57	36
DLF9-3616J	M36 x 2	36	28 L	25	1”	16	79.6	3.5	75	41
DLF9-4520J	M45 x 2	45	35 L	32	1.1/4”	20	85.5	2	89.5	50
DLF9-5224J	M52 x 2	52	42 L	38	1.1/2”	24	103	3	103.5	60

PIRTEK

This page is part of a complete catalogue containing technical and safety data.
All data must be reviewed when selecting a product.
Pirtek reserve the right to change technical specifications without notice

METRIC FITTINGS

ORIGIN: GERMANY

DSM1

DKS (HEAVY) METRIC 24° MALE STRAIGHT

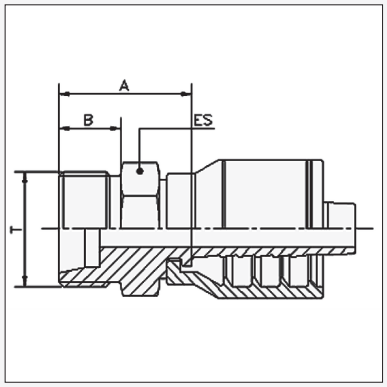

Product Code	Metric Thread			Hose Bore			Dimensions (mm)		
	Thread	Size	Tube	DN	Inch	Size	A	B	ES
DSM1-1604K	M16 x 1.5	16	8 S	6	1/4”	04	26	12	17
DSM1-1804K	M18 x 1.5	18	10 S	6	1/4”	04	26	12	19
DSM1-2006K	M20 x 1.5	20	12 S	10	3/8”	06	26	12	22
DSM1-2206K	M22 x 1.5	22	14 S	10	3/8”	06	28	14	22
DSM1-2408K	M24 x 1.5	24	16 S	12	1/2”	08	28.5	14	24
DSM1-3010K	M30 x 2	30	20 S	16	5/8”	10	33	16	30
DSM1-3612J	M36 x 2	36	25 S	20	3/4”	12	38	18	36
DSM1-4216J	M42 x 2	42	30 S	25	1”	16	40.1	20	46
DSM1-5220J	M52 x 2	52	38 S	32	1.1/4”	20	49.9	22	55

DSF1

DKS (HEAVY) METRIC 24° FEMALE STRAIGHT

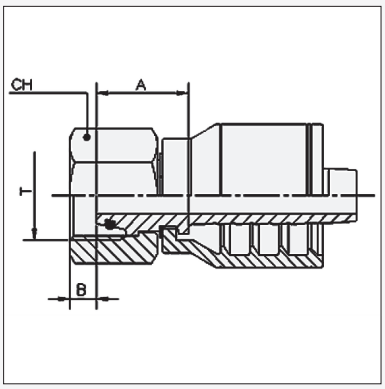

Product Code	Metric Thread			Hose Bore			Dimensions (mm)		
	Thread	Size	Tube	DN	Inch	Size	A	B	CH
DSF1-1404K	M14 x 1.5	14	6 S	6	1/4”	04	22	2.5	17
DSF1-1604K	M16 x 1.5	16	8 S	6	1/4”	04	26.5	2.5	19
DSF1-1804K	M18 x 1.5	18	10 S	6	1/4””	04	28	2	22
DSF1-2005K	M20 x 1.5	20	12 S	8	5/16”	05	27	2	24
DSF1-2006K	M20 x 1.5	20	12 S	10	3/8”	06	25.5	2	24
DSF1-2008J	M20 x 1.5	20	12S	12	1/2"	08	27	2	24
DSF1-2206K	M22 x 1.5	22	14 S	10	3/8”	06	28.5	4	27
DSF1-2208J	M22 x 1.5	22	14 S	12	1/2"	8	30	4	27
DSF1-2408K	M24 x 1.5	24	16 S	12	1/2”	08	32	3	30
DSF1-2408J	M24 x 1.5	24	16 S	12	1/2"	08	33	3	30
DSF1-3010K	M30 x 2	30	20 S	16	5/8”	10	34	3.5	36
DSF1-3012J	M30 x 2	30	20 S	20	3/4”	12	34	3.5	36
DSF1-3612J	M36 x 2	36	25 S	20	3/4”	12	41	3	46
DSF1-3616J	M36 x 2	36	25 S	25	1”	16	42.1	3	46
DSF1-4216J	M42 x 2	42	30 S	25	1”	16	44.6	6	50
DSF1-5220J	M52 x 2	52	38 S	32	1.1/4”	20	48.9	6.5	60

PIRTEK

This page is part of a complete catalogue containing technical and safety data.
All data must be reviewed when selecting a product.
Pirtek reserve the right to change technical specifications without notice

METRIC FITTINGS
ORIGIN: GERMANY

DSF4
DKS (HEAVY) METRIC 24° FEMALE 45° ELBOW

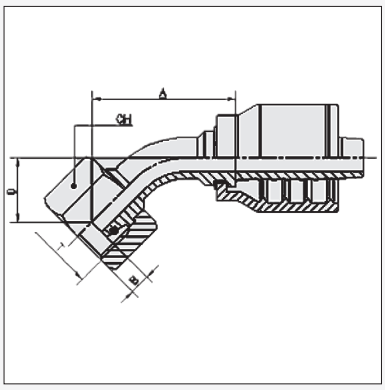

Product Code	Metric Thread			Hose Bore			Dimensions (mm)			
	Thread	Size	Tube	DN	Inch	Size	A	B	D	CH
DSF4-1404K	M14 x 1.5	14	6 S	6	1/4”	04	40.5	2.5	20	17
DSF4-1604K	M16 x 1.5	16	8 S	6	1/4”	04	40.5	2.5	16.5	19
DSF4-1804K	M18 x 1.5	18	10 S	6	1/4”	04	42.5	2	17	22
DSF4-1806K	M18 x 1.5	18	10S	10	3/8"	6	42.2	2	19.2	22
DSF4-2006K	M20 x 1.5	20	12 S	10	3/8”	06	46	2	21.5	24
DSF4-2206K	M22 x 1.5	22	14 S	10	3/8”	06	49.5	4	23.4	27
DSF4-2408K	M24 x 1.5	24	16 S	12	1/2”	08	61	3	26	30
DSF4-3010K	M30 x 2	30	20 S	16	5/8”	10	59	3.5	26	36
DSF4-3008K	M30 x 2	30	20 S	08	1/2"	08				
DSF4-3012J	M30 x 2	30	20 S	20	3/4”	12	59	3.5	26	36
DSF4-3612J	M36 x 2	36	25 S	20	3/4”	12	81.5	3	34.5	46
DSF4-4216J	M42 x 2	42	30 S	25	1”	16	91.5	6	35	50

DSF9
DKS (HEAVY) METRIC 24° FEMALE 90° ELBOW

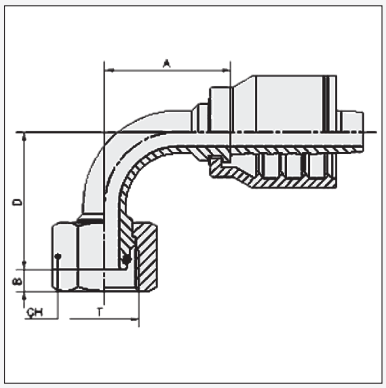

Product Code	Metric Thread			Hose Bore			Dimensions (mm)			
	Thread	Size	Tube	DN	Inch	Size	A	B	D	CH
DSF9-1404K	M14 x 1.5	14	6 S	6	1/4”	04	27.5	2.5	37.5	17
DSF9-1604K	M16 x 1.5	16	8 S	6	1/4”	04	28.5	2.5	32	19
DSF9-1804K	M18 x 1.5	18	10 S	6	1/4”	04	33	2	33.5	22
DSF9-2006K	M20 x 1.5	20	12 S	10	3/8”	06	37	2	36	24
DSF9-2206K	M22 x 1.5	22	14 S	10	3/8”	06	38.5	4	46	27
DSF9-2408K	M24 x 1.5	24	16 S	12	1/2”	08	43.5	3	46	30
DSF9-2408J	M24 x 1.5	24	16 S	12	1/2"	08	38.2	3	42.5	30
DSF9-3010K	M30 x 2	30	20 S	16	5/8”	10	52	3.5	53.5	36
DSF9-3012J	M30 x 2	30	20 S	20	3/4”	12	52	3.5	53.5	36
DSF9-3612J	M36 x 2	36	25 S	20	3/4”	12	73.7	3	72.5	46
DSF9-3616J	M36 x 2	36	25 S	25	1"	16	74	3	71.5	46
DSF9-4216J	M42 x 2	42	30 S	25	1”	16	83	6	77	50
DSF9-5220J	M52 x 2	52	38 S	32	1.1/4”	20	95.6	6.5	104	60

O-RING DATA

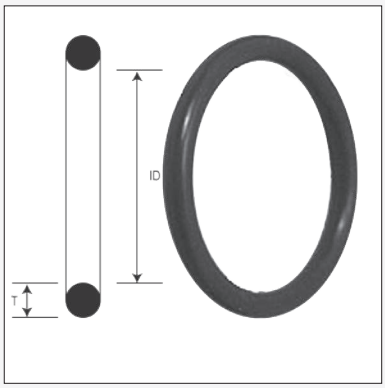

O-RING DETAILS FOR LIGHT & HEAVY METRIC HOSE TAILS - 70 DURO NBR					
PRODUCT CODE	METRIC SERIES	METRIC THREAD SIZE		TUBE O.D. (MM)	DIMENSIONS (MM)
		LIGHT SERIES	HEAVY SERIES		I.D. X THICKNESS (T)
DKOR-06L/S	DKL / DKS	M12X1.5	M14X1.5	6	4 X 1.5
DKOR-08L/S	DKL / DKS	M14X1.5	M16X1.5	8	6 X 1.5
DKOR-10L/S	DKL / DKS	M16X1.5	M18X1.5	10	7.5 X 1.5
DKOR-12L/S	DKL / DKS	M18X1.5	M20X1.5	12	9 X 1.5
DKOR-14S	DKS	-	M22X1.5	14	10 X 2
DKOR-15L/16S	DKL / DKS	M22X1.5	M24X1.5	15 /16	12 X 2
DKOR-18L	DKL	M26X1.5	-	18	15 X 2
DKOR-20S	DKS	-	M30X2	20	16.3 X 2.4
DKOR-22L	DKL	M30X2	-	22	20 X 2
DKOR-25S	DKS	-	M36X2	25	20.3 X 2.4
DKOR-28L	DKL	M36X2	-	28	26 X 2
DKOR-30S	DKS	-	M42X2	30	25.3 X 2.4
DKOR-35L	DKL	M45X2	-	35	32 X 2.5
DKOR-38S	DKS	-	M52X2	38	33.3 X 2.4
DKOR-42L	DKL	M52X2	-	42	38 X 2.5

METRIC FITTINGS
ORIGIN: GERMANY

SPM1
METRIC STANDPIPE
STRAIGHT

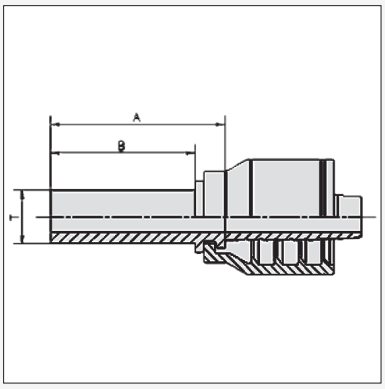

Product Code	Metric Thread			Hose Bore			Dimensions (mm)		
	Thread	Size	Tube	DN	Inch	Size	T	A	B
SPM1-0604K †	06	06	6 L/S	06	1/4”	04	6	28	22
SPM1-0804K †	08	08	8 L/S	06	1/4”	04	8	30.5	24
SPM1-1004K †	10	10	10 L/S	06	1/4”	04	10	33	27
SPM1-1005K †	10	10	10 L/S	08	5/16”	05	10	30.5	24
SPM1-1006K †	10	10	10 L/S	10	3/8”	06	10	30.5	24
SPM1-1206K †	12	12	12 L/S	10	3/8”	06	12	30.5	24
SPM1-1508K †	15	15	15 L	12	1/2”	08	15	33	26
SPM1-1608K †	16	16	16 S	12	1/2”	08	16	37	30
SPM1-1810K †	18	18	18 L	16	5/8”	10	18	34	27
SPM1-2010K †	20	20	20 S	16	5/8”	10	20	44	37
SPM1-2212J †	22	22	22 L	20	3/4"	12	22	36.5	29
SPM1-2512J †	25	25	25 S	20	3/4"	12	25	48.5	41
SPM1-2816J †	28	28	28 L	25	1"	16	28	39.5	30
SPM1-3016J †	30	30	30 S	25	1"	16	30	53.5	44

SPM4
METRIC STANDPIPE
45° ELBOW

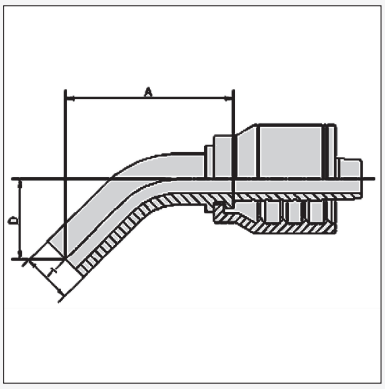

Product Code	Metric Thread			Hose Bore			Dimensions (mm)		
	Thread	Size	Tube	DN	Inch	Size	T	A	D
SPM4-0604K †	06	06	6 L/S	6	1/4”	04	6	45	22
SPM4-0804K †	08	08	8 L/S	6	1/4”	04	8	50.5	23
SPM4-1004K †	10	10	10 L/S	6	1/4”	04	10	57.5	24.5
SPM4-1006K †	10	10	10 L/S	10	3/8”	06	10	45.5	22
SPM4-1206K †	12	12	12 L/S	10	3/8”	06	12	56	29
SPM4-1508K †	15	15	15 L	12	1/2”	08	15	60.5	28
SPM4-1608K †	16	16	16 S	12	1/2”	08	16	53	34
SPM4-1810K †	18	18	18 L	16	5/8”	10	18	86	39
SPM4-2010K †	20	20	20 S	16	5/8”	10	20	86	46

SPM9
METRIC STANDPIPE
90° ELBOW

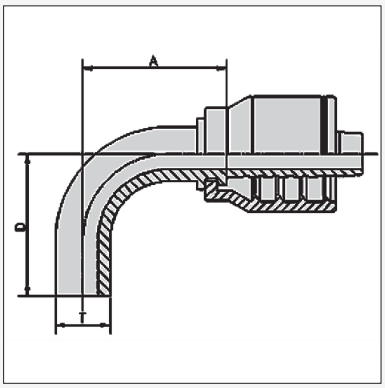

Product Code	Metric Thread			Hose Bore			Dimensions (mm)		
	Thread	Size	Tube	DN	Inch	Size	T	A	D
SPM9-0604K †	06	06	6 L/S	6	1/4”	04	6	25	34
SPM9-0804K †	08	08	8 L/S	6	1/4”	04	8	27.5	36
SPM9-1004K †	10	10	10 L/S	6	1/4”	04	10	27.5	36
SPM9-1005K †	10	10	10 L/S	8	5716”	05	10	36	39
SPM9-1006K †	10	10	10 L/S	10	3/8”	06	10	36	39
SPM9-1206K †	12	12	12 L/S	10	3/8”	06	12	33.5	47
SPM9-1508K †	15	15	15 L	12	1/2”	08	15	43.5	54
SPM9-1608K †	16	16	16 S	12	1/2”	08	16	42.5	53.5
SPM9-1810K †	18	18	18 L	16	5/8”	10	18	58.5	63
SPM9-2010K †	20	20	20 S	16	5/8”	10	20	59.5	68

This page is part of a complete catalogue containing technical and safety data.
All data must be reviewed when selecting a product.
Pirtek reserve the right to change technical specifications without notice

METRIC FITTINGS
ORIGIN: GERMANY

BM1
METRIC BANJO STRAIGHT

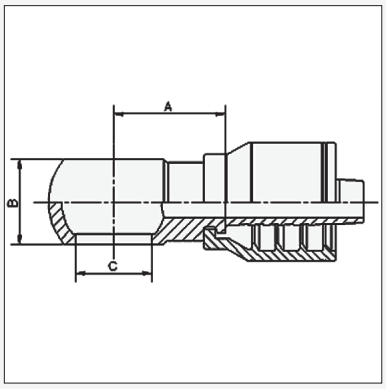

Product Code	Metric Thread			Nominal ID			Dimensions mm		
	T	Size		Dash	Inch	DN	A	B	C
BM1-1204K	M12 x 1.5	12	12	6	1/4”	04	21	12	12
BM1-1405K	M14 x 1.5	14	14	8	5/16”	05	22.5	14	14
BM1-1406K	M14 x 1.5	14	14	10	3/8”	06	24	14	14
BM1-1606K	M16 x 1.5	16	16	10	3/8”	06	24	18	16
BM1-1806K	M18 x 1.5	18	18	10	3/8”	06	27.5	20	18
BM1-1808K	M18 x 1.5	18	18	12	1/2”	08	28.1	20	18
BM1-2210K	M22 x 1.5	22	22	16	5/8”	10	28	22	22
BM1-2612J	M 26 x 1.5	26	26	20	3/4”	12	38	29	26
BM1-3016J	M30 x 2	30	30	25	1”	16	46.1	37	30

BMB
METRIC BANJO BOLT

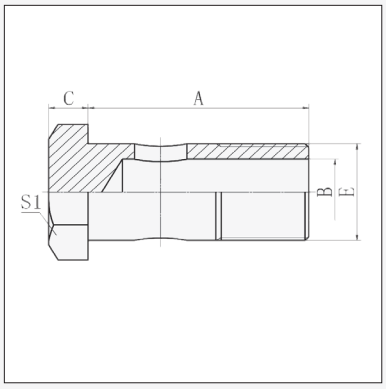

Product Code	Bolt Thread		To Suit Hose Bore			Dimension (mm)				
	E	Size	DN	Inch	Size	A	B	C	S1	E
BMB-10	M10 x 1	10	05	3/16”	03					
BMB-12	M12 x 1.5	12	06	1/4”	04	24	6	6	17	12
BMB-14	M14 x 1.5	14	10	3/8”	06	26	8	7	19	14
BMB-16	M16 x 1.5	16	10	3/8”	06	28	9	7.5	22	16
BMB-18	M18 x 1.5	18	10, 12	3/8” , 1/2”	06 , 08	32	11	8	24	18
BMB-22	M22 x 1.5	22	16	5/8”	10	39	14	9	27	22
BMB-26	M26 x 1.5	26	20	3/4”	12	45	18	10	32	26

MOF1
METRIC O-RING FACE SEAL FEMALE STRAIGHT
SUITS CHINESE EQUIPMENT

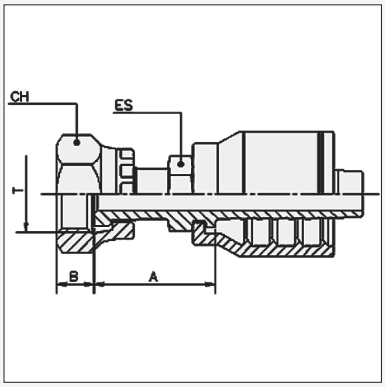

Product Code	Metric Thread		Hose Bore			Dimensions (mm)			
	Thread	Size	DN	Inch	Size	A	B	CH	ES
MOF1-1604K	M16 x 1.5	04	6	1/4”	04	na	na	19	-
MOF1-1804K	M18 x 1.5	04	6	1/4”	04	23	8.2	22	-
MOF1-1606K	M16 x 1.5	06	10	3/8"	06	18	8.2	19	-
MOF1-1806K	M18 x 1.5	06	10	3/8"	06	25	8.2	22	-
MOF1-2206K	M22 x 1.5	06	10	3/8""	06	27	10.4	27	-
MOF1-2208K	M22 x 1.5	06	12	1/2"	08	28.5	10	27	-
MOF1-2408K	M24 x 1.5	08	12	1/2”	08	26	10.8	30	-

Pirtek do not offer male hose tails or adaptors to suit these fittings. The male fittings, when encountered in the field, differ in the manner of O-Ring retention from conventional American ORFS fittings. They feature a recessed circular flat area to retain the O-Ring rather than the more common groove as used in American fittings.

SAE FLANGES
ORIGIN: NORTH AMERICA

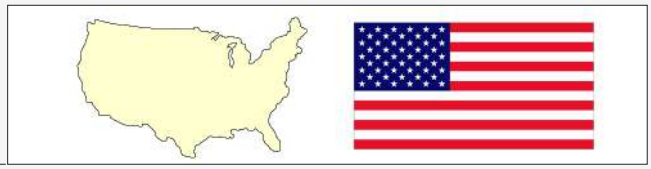

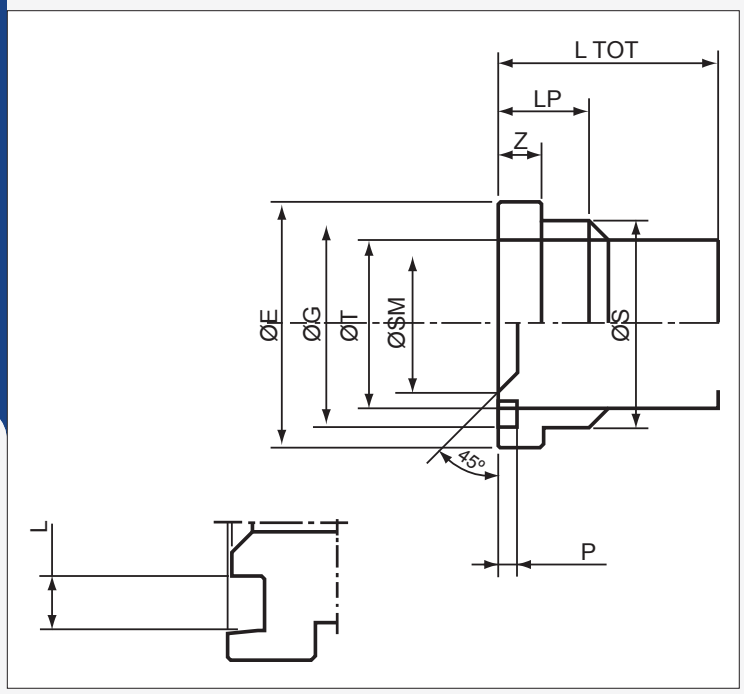

Nominal Groove and Flange Dimensions for the Pirtek Range of SAE Code 61, Code 62 and "Supercat" Flanges

Note that manufacturing tolerances may apply. Refer SAE J518 for comprehensive details.

Further technical details of O-Rings and Flange Clamps can be found in Section D (Adaptors) of this Catalogue

Note that the dimensions of "Supercat" Flanges are identical to those of Code 62 Flanges in all respects except Dimension Z.

The "Supercat" Flanges all have 14.2 mm as the Z Dimension Code 62 flange clamps do not suit "Supercat" flange

Associated bolt dimensions are tabulated opposite

SIZE	O-Ring Product Code	Clamp Product Code	CODE 61 DIMENSIONS							
			ØE	ØG	ØS	Z	LP	L	P	LTOT
08	**Y-08**	**AZ3-08**	30.18	25.46	24	6.73	13	4.2	2.86	Sufficient to allow bolt installation
12	**Y-12**	**AZ3-12**	38.10	31.80	32	6.73	14	4.2	2.86	
16	**Y-16**	**AZ3-16**	44.45	39.68	38	8.00	14	4.2	2.86	
20	**Y-20**	**AZ3-20**	50.80	44.51	43	8.00	14	4.2	2.86	
24	**Y-24**	**AZ3-24**	60.33	53.85	50	8.00	16	4.2	2.86	
32	**Y-32**	**AZ3-32**	71.42	63.37	62	9.53	16	4.2	2.86	
40	**Y-40**	**AZ3-40**	84.12	76.20	74	9.53	18	4.2	2.86	
48	**Y-48**	**AZ3-48**	101.60	91.92	90	9.53	19	4.2	2.86	
56	**Y-56**	**AZ3-56**	114.2	103.7	88.9	11.2	23	4.2	2.86	
64	**Y-64**	**AZ3-64**	127	116.7	101.7	11.2	28	4.2	2.86	

SIZE	O-Ring * Product Code	Clamp Product Code	CODE 62 DIMENSIONS							
			ØE	ØG	ØS	Z	LP	L	P	LTOT
08	**Y-08**	**AZ6-08**	31.75	25.46	24	7.75	14	4.2	2.86	Sufficient to allow bolt installation
12	**Y-12**	**AZ6-12**	41.28	31.80	32	8.76	18	4.2	2.86	
16	**Y-16**	**AZ6-16**	47.63	39.68	38	9.53	21	4.2	2.86	
20	**Y-20**	**AZ6-20**	53.98	44.51	44	10.29	25	4.2	2.86	
24	**Y-24**	**AZ6-24**	63.50	53.85	51	12.57	30	4.2	2.86	
32	**Y-32**	**AZ6-32**	79.38	63.37	67	12.57	38	4.2	2.86	

* **OKS** Series O-Rings provide superior performance to the Y Series O-Rings for more demanding applications often associated with Code 62 Flanges
See Catalogue Section D page D 84

SIZE	O-Ring Product Code	Clamp Product Code	STANDARD PRESSURE KOMATSU FLANGES DIMENSIONS							
			ØE	ØG	ØS	Z	LP	L	P	LTOT
10	**Y-10**	**-**	34.1	27.9	25.9	6-70	14	4.75	2.70	61
12	**KY-12**	**AZ3-12**	38.0	31.07	31.80	6.70	14	4.75	2.70	65
16	**KY-16**	**AZ3-16**	44.5	38.07	38.00	8.00	14	4.75	2.70	65
20	**KY-20**	**AZ3-20**	50.8	44.07	43.00	8.00	14	4.75	2.70	71
24	**KY-24**	**AZ3-24**	60.3	54.10	50.20	8.00	16	4.75	2.70	83
32	**KY-32**	**AZ3-32**	71.4	65.10	62.00	9.50	22+	4.25	2.40	113

**This page is part of a complete catalogue containing technical and safety data.
All data must be reviewed when selecting a product.
Pirtek reserve the right to change technical specifications without notice**

SAE FLANGES
ORIGIN: NORTH AMERICA

AZ3
SAE CODE 61
SPLIT FLANGE CLAMPS

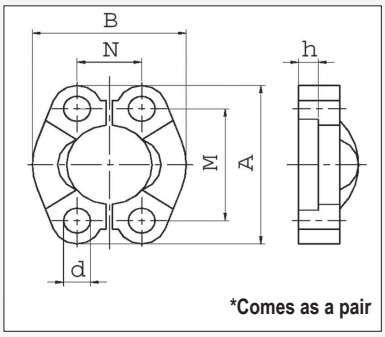

Product Code	Flange Size	Maximum W.P. bar	Dimensions mm						Bolt Size	
			A	B	M	N	h	d	Metric	UNC
AZ3-08	1/2"	345	53.8	46.1	38.1	17.5	6.2	9	M8 x 25	5/16" - 18
AZ3-10	5/8"	345	22.8	47.6	42.9	19.8	6.2	9	M8 x 35	5/16" - 18
AZ3-12	3/4"	345	65	52.4	47.6	22.2	6.2	11	M10 x 30	3/8" - 16
AZ3-16	1"	345	69.9	58.7	52.4	26.2	7.5	11	M10 x 30	3/8" - 16
AZ3-20	1.1/4"	276	79.2	73	58.7	30.2	7.5	12	M10 x 30	7/16" - 14
AZ3-24	1.1/2"	207	93.7	82.6	69.9	35.7	7.5	13.5	M12 x 35	1/2" - 13
AZ3-32	2"	207	101.6	96.8	77.8	42.9	9	13.5	M12 x 35	1/2" - 13
AZ3-40	2.1/2"	172	114	108	88.9	50.8	9	13.5	M12 x 40	1/2" - 13
AZ3-48	3"	138	135	130.6	106.4	61.9	9	17.5	M16 x 50	5/8" - 11
AZ3-56	3.1/2"	35	152	139.2	120.7	69.8	10.7	17.5	M16 x 50	5/8" - 11
AZ3-64	4"	35	161	149.8	130.3	76.8	10.7	16.8	M16 x 50	5/8" - 11

* JIS size 10 is used only by Komatsu®
Komatsu® Flanges differ from Code 61 Flanges by their use of metric O-Rings instead of Imperial O-Rings, but are in all other respects identical.
Never use Imperial O-Rings (**Y** or **OKS**) in Komatsu® flanges - only **KY** series

AZ6
SAE CODE 62
SPLIT FLANGE CLAMPS

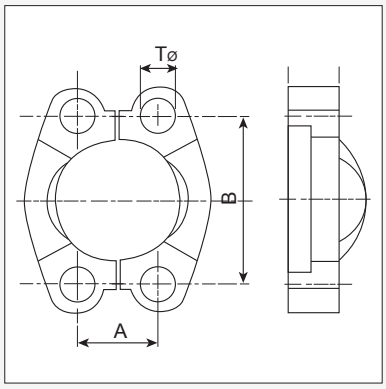

Product Code	Clamp			Dimensions (mm)			Associated Bolt Details			
							UNC Bolts		Metric Bolts	
	DN	Dash Size	Inch	Tø	A	B	Thread	Length Code 62	Thread	Length Code 62
AZ6-08	12	08	1/2"	9	18.25	40.49	5/16"-18	1¼"	M8 x 1.25	30
AZ6-12	20	12	3/4"	11	23.82	50.80	3/8"-16	1½"	M10 x 1.5	35
AZ6-16	25	16	1"	13	27.78	57.15	7/16"-14	1¾"	M12 x 1.75	45
AZ6-20	32	20	1.1/4"	15	31.76	66.68	½"-13	1¾"	M12 x 1.75	45
AZ6-24	38	24	1.1/2"	17	36.52	79.38	5/8"-11	2¼"	M16 x 2	55
AZ6-32	50	32	2"	21	44.46	96.82	¾"-10	2¾"	M20 x 2.5	70

SAE FLANGES

ORIGIN: NORTH AMERICA

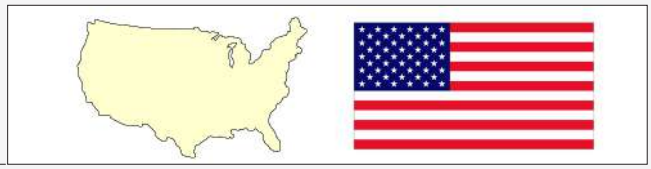

C611

3000 PSI CODE 61 STRAIGHT STANDARD & LONG FLANGE

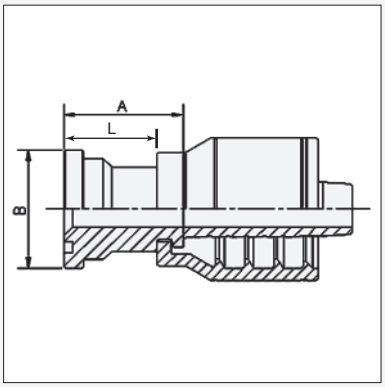

Product Code	Flange			Hose Bore			Dimensions (mm)			
	Bore	Size	ø ins.	DN	Inch	Size	A	øB		
C611-0808K	1/2”	08	1.3/16”	12	1/2”	08	38	30.2		
C611-1010K †	5/8”	10	1.3/8”	16	5/8”	10	65	34.1		
C611-1208K	3/4”	12	1.1/2”	12	1/2”	08	39	38.1		
C611-1210K	3/4"	12	1.1/2"	16	5/8"	10	39	38		
C611-1212J	3/4”	12	1.1/2”	20	3/4”	12	41	38.1		
C611-1612J	1”	16	1.3/4”	20	3/4”	12	47.4	44.5		
C611-1616J	1”	16	1.3/4”	25	1”	16	48.5	44.5		
C611-1620J	1”	16	1.3/4”	32	1.1/4”	20	51.4	44.5		
C611-2012J	1.1/4"	20	2"	20	3/4"	12	47	50.8		
C611-2016J	1.1/4”	20	2”	25	1”	16	49.6	50.8		
C611-2020J	1.1/4”	20	2”	32	1.1/4”	20	51.4	50.8		
C611-2020J-057	1.1/4"	20	2"	32	1.1/4"	20	66.9	50.8		
C611-2420J	1.1/2”	24	2.3/8”	32	1.1/4”	20	54.9	60.3		
C611-2424J	1.1/2”	24	2.3/8”	38	1.1/2”	24	53	60.3		
C611-3224J	2”	32	2.13/16”	38	1.1/2”	24	74.5	71.4		
C611-2432J	1.1/2"	24	2.3/8"	50	2"	32	89	60.3		
C611-3232J	2”	32	2.13/16”	50	2”	32	76.2	71.4		
C611-4032J	2.1/2"	40	3.5/16"	50	2”	32	78.5	84.1		
C611-4040J	2.1/2"	40	3.5/16"	62	2.1/2"	40	90	84.1		
C611-4840J	3"	48	4"	62	2.1/2"	40	90	101.6		
C611-4848J	3"	48	4"	80	3"	48	60	101.6		

† Unique to Komatsu

C612 / C613

3000 PSI CODE 61 22° & 30° ELBOW FLANGE

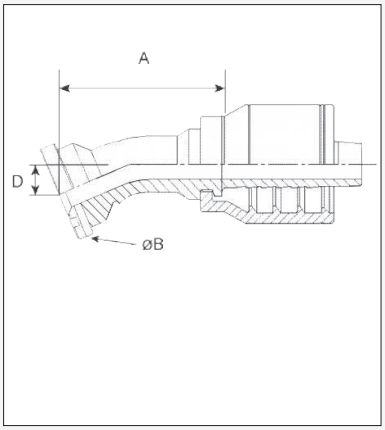

Product Code	Flange			Hose Bore			Dimensions (mm)			
	Bore	Size	ø ins.	DN	Inch	Size	A	øB	D	
22° ELBOW FLANGES										
C612-1212J	3/4”	12	1.1/2”	20	3/4”	12	68.7	38.1	11.8	
C612-1612J	1”	16	1.3/4”	20	3/4”	12	67.3	44.5	13	
C612-1616J	1”	16	1.3/4”	25	1”	16	73	44.5	11.5	
C612-2016J	1.1/4”	20	2”	25	1”	16	75.5	50.8	12.5	
C612-2020J	1.1/4”	20	2”	32	1.1/4”	20	81.5	50.8	13.5	
C612-2420J	1.1/2”	24	2.3/8”	32	1.1/4”	20	86	60.3	13.5	
C612-2424J	1.1/2”	24	2.3/8”	38	1.1/2”	24	99	60.3	16	
C612-3224J	2”	32	2.13/16”	38	1.1/2”	24	99	71.4	15.5	
C612-3232J	2”	32	2.13/16”	50	2”	32	131	71.4	23	
C612-4040J	2.1/2"	40	3.5/16"	62	2.1/2"	40	105	84.1	18.6	
C612-4848J	3"	48	4"	76	3"	48	112,8	101,6	21,1	
30° ELBOW FLANGES										
C613-1212J	3/4”	12	1.1/2”	20	3/4”	12	69.2	38.1	16.6	
C613-1612J	1”	16	1.3/4”	20	3/4”	12	68.7	44.5	18	
C613-1616J	1”	16	1.3/4”	25	1”	16	78	44.5	16.5	
C613-2016J	1.1/4”	20	2”	25	1”	16	74	50.8	18	
C613-2020J	1.1/4”	20	2”	32	1.1/4”	20	84	50.8	19	
C613-2420J	1.1/2”	24	2.3/8”	32	1.1/4”	20	90	60.3	19	
C613-2424J	1.1/2”	24	2.3/8”	38	1.1/2”	24	103	60.3	22.5	
C613-3224J	2”	32	2.13/16”	38	1.1/2”	24	103	71.4	22.5	
C613-3232J	2”	32	2.13/16”	50	2”	32	138	71.4	32	
C613-4040J	2.1/2"	40	3.5/16"	62	2.1/2"	40	114.4	84.1	27.7	
C613-4848J	3"	48	4"	80	3"	48	116.9	101.6	28.2	

This page is part of a complete catalogue containing technical and safety data.
All data must be reviewed when selecting a product.
Pirtek reserve the right to change technical specifications without notice

SAE FLANGES
ORIGIN: NORTH AMERICA

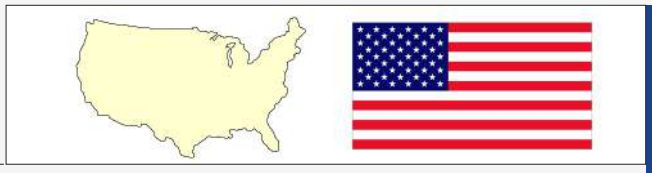

C614
3000 PSI CODE 61
45° ELBOW FLANGE

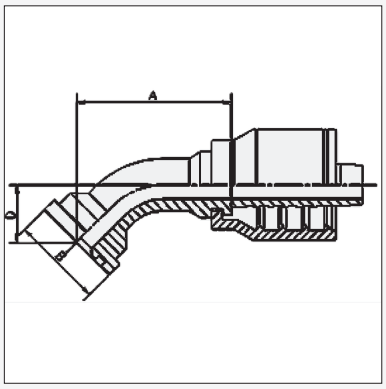

Product Code	Flange			Hose Bore			Dimensions (mm)		
	Bore	Size	ø ins.	DN	Inch	Size	A	øB	D
C614-0808K	1/2"	08	1.3/16"	12	1/2"	08	55.2	30	22.6
C614-1208K	3/4"	12	1.1/2"	12	1/2"	08	60.5	38.1	26
C614-1010K †	5/8"	10	1.3/8"	16	5/8"	10	66	34.1	26.7
C614-1212J	3/4"	12	1.1/2"	20	3/4"	12	70	38.1	26.7
C614-1612J	1"	16	1.3/4"	20	3/4"	12	73	44.5	28.8
C614-1616J	1"	16	1.3/4"	25	1"	16	75.5	44.5	27
C614-2016J	1.1/4"	20	2"	25	1"	16	77.3	50.8	29
C614-2020J	1.1/4"	20	2"	32	1.1/4"	20	89	50.8	31
C614-2420J	1.1/2"	24	2.3/8"	32	1.1/4"	20	91.8	60.3	31
C614-2424J	1.1/2"	24	2.3/8"	38	1.1/2"	24	100	60.3	36.5
C614-3224J	2"	32	2.13/16"	38	1.1/2"	24	105	71.4	36.5
C614-3224J-056	2"	32	2.13/16"	38	1.1/2"	24	127.5	71.4	56
C614-3232J	2"	32	2.13/16"	50	2"	32	140	71.4	53
C614-4032J	2.1/2"	40	3.5/16"	50	2"	32	164	84.1	61
C614-4040J	2.1/2"	40	3.5/16"	62	2.1/2"	40	134.4	84.1	49
C614-4840J	3"	48	4"	62	2.1/2"	40	137.9	101.6	52.5
C614-4848J	3"	48	4"	80	3"	48	142.4	101.6	57

† Unique to Komatsu

C616
3000 PSI CODE 61
60° ELBOW FLANGE

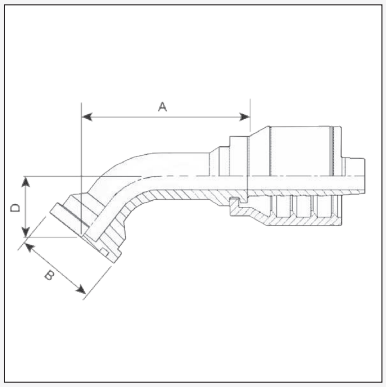

Product Code	Flange			Hose Bore			Dimensions (mm)		
	Bore	Size	ø ins.	DN	Inch	Size	A	øB	D
C616-1212J	3/4"	12	1.1/2"	20	3/4"	12	68.9	38.1	37.2
C616-1612J	1"	16	1.3/4"	20	3/4"	12	71.2	44.5	39.8
C616-1616J	1"	16	1.3/4"	25	1"	16	82	44.5	40
C616-2016J	1.1/4"	20	2"	25	1"	16	85	50.8	40
C616-2020J	1.1/4"	20	2"	32	1.1/4"	20	97.8	50.8	44
C616-2420J	1.1/2"	24	2.3/8"	32	1.1/4"	20	97.8	60.3	44
C616-2424J	1.1/2"	24	2.3/8"	38	1.1/2"	24	114	60.3	52
C616-3224J	2"	32	2.13/16"	38	1.1/2"	24	112	71.4	55.5
C616-3232J	2"	32	2.13/16"	50	2"	62	155	71.4	76
C616-4040J	2.1/2"	40	3.5/16"	38	2.1/2"	40	138.3	84.1	73.4
C616-4848J	3"	48	4"	80	3"	48	138.3	101.6	83

C617
3000 PSI CODE 61
67° ELBOW FLANGE

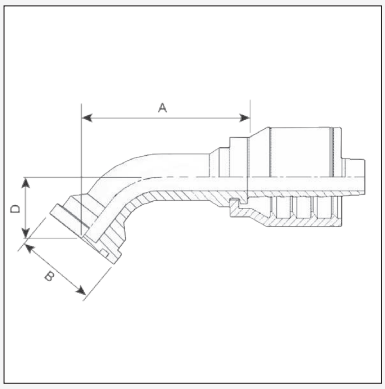

Product Code	Flange			Hose Bore			Dimensions (mm)		
	Bore	Size	ø ins.	DN	Inch	Size	A	øB	D
C617-1212J	3/4"	12	1.1/2"	20	3/4"	12	67.1	38.1	42.4
C617-1612J	1"	16	1.3/4"	20	3/4"	12	71.7	44.5	45.2
C617-1616J	1"	16	1.3/4"	25	1"	16	77	44.5	46
C617-2016J	1.1/4"	20	2"	25	1"	16	82	50.8	46
C617-2020J	1.1/4"	20	2"	32	1.1/4"	20	85.6	50.8	50
C617-2420J	1.1/2"	24	2.3/8"	32	1.1/4"	20	95.6	60.3	50
C617-2424J	1.1/2"	24	2.3/8"	38	1.1/2"	24	108.5	60.3	59.5
C617-3224J	2"	32	2.13/16"	38	1.1/2"	24	111	71.4	63
C617-3232J	2"	32	2.13/16"	50	2"	32	153	71.4	87.5

This page is part of a complete catalogue containing technical and safety data.
All data must be reviewed when selecting a product.
Pirtek reserve the right to change technical specifications without notice

SAE FLANGES

ORIGIN: NORTH AMERICA

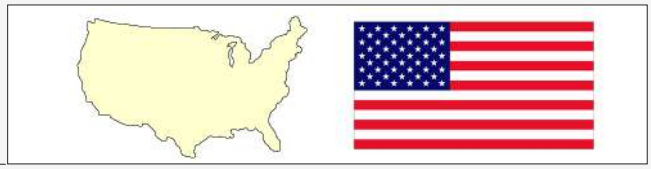

C619

3000 PSI CODE 61 90° FLANGED ELBOW
STANDARD & LONG DROP ELBOWS

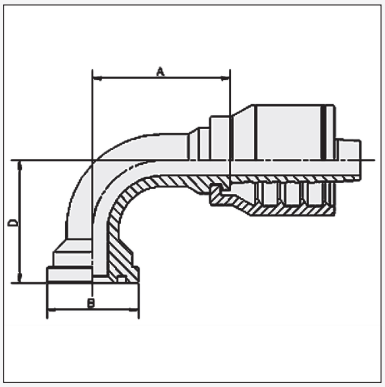

† Unique to Komatsu

Product Code	Flange			Hose Bore			Dimensions (mm)		
	Bore	Size	ø ins.	DN	Inch	Size	A	øB	D
STANDARD DROP ELBOWS									
C619-0808K	1/2”	08	1.3/16”	12	1/2”	08	50	30	45
C619-1010K †	5/8”	10	1.3/8”	16	5/8”	10	60.5	34.1	55
C619-1208K	3/4”	12	1.1/2”	12	1/2”	08	49.5	38	49
C619-1210K	3/4"	12	1.1/2"	16	5/8"	10	55.5	38	55
C619-1212J	3/4”	12	1.1/2”	20	3/4”	12	63.7	38	56.5
C619-1212J-100	3/4"	12	1.1/2"	20	3/4"	12	62.2	38	100
C619-1212J-125	3/4"	12	1.1/2"	20	3/4"	12	63.7	38	125
C619-1612J	1”	16	1.3/4”	20	3/4”	12	62.7	44.5	59.5
C619-1612J-100	1"	16	1.3/4"	20	3/4"	12	61.2	44.4	100
C619-1616J	1”	16	1.3/4”	25	1”	16	71	44.5	61
C619-1616J-070	1"	16	1.3/4"	25	1"	16	70	44.5	70
C619-1616J-120	1"	16	1.3/4"	25	1"	16	76	44.5	120
C619-1620J	1”	16	1.3/4”	32	1.1/4”	20	104	44.5	93
C619-2012J	1.1/4"	20	2"	20	3/4"	12	62.2	50.8	62
C619-2016J	1.1/4”	20	2”	25	1”	16	71	50.8	61
C619-2016J-120	1.1/4"	20	2"	25	1"	16	75	50.8	120
C619-2020J	1.1/4”	20	2”	32	1.1/4”	20	87	50.8	69.2
C619-2020J-100	1.1/4"	20	2"	32	1.1/4"	20	87	50.8	100
C619-2020J-120	1.1/4"	20	2"	32	1.1/4"	20	87	50.8	120
C619-2020J-130	1.1/4"	20	2"	32	1.1/4"	20	87	50.8	130
C619-2020J-170	1.1/4"	20	2"	32	1.1/4"	20	87	50.8	170
C619-2020J-189	1.1/4"	20	2"	32	1.1/4"	20	87	50.8	189
C619-2416J-107	1.1/2"	24	2.3/8"	25	1"	16	79	60.3	107
C619-2420J	1.1/2”	24	2.3/8”	32	1.1/4”	20	87	60.3	69.2
C619-2420J-117	1.1/2"	24	2.3/8"	32	1.1/4"	20	87	60.3	117
C619-2420J-130	1.1/2"	24	2.3/8"	32	1.1/4"	20	87	60.3	130
C619-2424J	1.1/2”	24	2.3/8”	38	1.1/2”	24	104	60.3	81
C619-2424J-150	1.1/2"	24	2.3/8"	38	1.1/2"	24	104	60.3	150
C619-2424J-170	1.1/2"	24	2.3/8"	38	1.1/2"	24	104	60.3	170
C619-2424J-200	1.1/2"	24	2.3/8"	38	1.1/2"	24	104	60.3	200
C619-2432J-120	1.1/2"	24	2.3/8"	50	2"	32	115	60.3	120
C619-2432J-170	1.1/2"	24	2.3/8"	50	2"	32	115	60.3	170
C619-2432J-220	1.1/2"	24	2.3/8"	50	2"	32	115	60.3	220
C619-3224J	2”	32	2.13/16”	38	1.1/2”	24	102	71.4	85
C619-3224J-114	2"	32	2.13/16”	38	1.1/2"	24	106	71.4	114
C619-3224J-171	2"	32	2.13/16”	38	1.1/2"	24	106	71.4	171
C619-3232J	2”	32	2.13/16”	50	2”	32	130	71.4	123
C619-3232J-165	2"	32	2.13/16”	50	2”	32	137.2	71.4	165
C619-3232J-203	2"	32	2.13/16”	50	2”	32	132.3	71.4	203
C619-3240J-121	2"	32	2.13/16"	63	2.1/2"	40	117	71.4	121
C619-4032J	2.1/2"	40	3.5/16"	50	2”	32	142	84.1	132
C619-4040J	2.1/2"	40	3.5/16"	62	2.1/2"	40	117	84.1	118
C619-4840J	3"	48	4"	62	2.1/2"	40	136.2	101.6	125
C619-4848J	3"	48	4"	80	3"	48	153	101.6	145

PIRTEK

This page is part of a complete catalogue containing technical and safety data.
All data must be reviewed when selecting a product.
Pirtek reserve the right to change technical specifications without notice

SAE FLANGES
ORIGIN: NORTH AMERICA

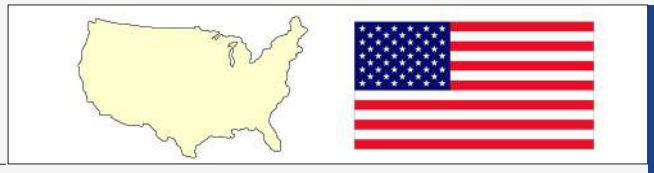

C6111 3000 PSI CODE 61
110° ELBOW FLANGE & LONG DROP 110° ELBOW FLANGE

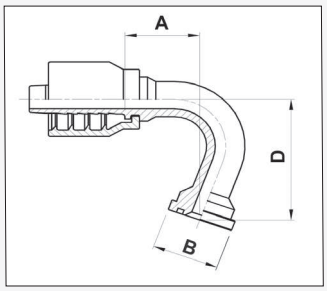

Product Code	Flange			Hose Bore			Dimensions (mm)			
	Bore	Size	ø ins.	DN	Inch	Size	A	øB	D	
C6111-1616J	1”	16	1.3/4”	25	1”	16	84.7	44.5	78	
C6111-2016J	1 1/4"	20	2"	25	1"	16	76	50.8	81.5	
C6111-2016J-133	1.1/4”	20	2”	25	1”	16	42.3	50.8	133	
C6111-2020J	1.1/4”	20	2”	32	1.1/4”	20	76	50.8	81.5	
C6111-2420J	1.1/2”	24	2.3/8”	32	1.1/4”	20	76	60.3	81.5	
C6111-2424J	1.1/2”	24	2.3/8”	38	1.1/2”	24	90	60.3	96.5	
C6111-2424J-118	1.1/2”	24	2.3/8”	38	1.1/2”	24	82.5	60.3	118	
C6111-2432J	1.1/2"	24	2.3/8"	50	2"	32	105	60.3	96.2	
C6111-3232J	2”	32	2.13/16”	50	2”	32	116.5	71.4	145	

C6113 3000 PSI CODE 61
135° ELBOW FLANGE

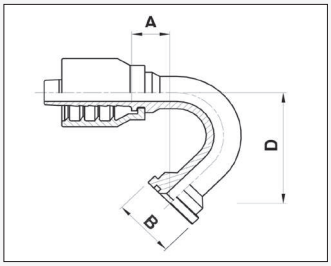

Product Code	Flange			Hose Bore			Dimensions (mm)			
	Bore	Size	ø ins.	DN	Inch	Size	A	øB	D	
C6113-1212J	3/4"	12	1.1/2"	20	3/4"	12	35.5	38	72	
C6113-1616J	1"	16	1.3/4"	25	1"	16	73.7	44.5	87.3	

C621/C621C/C621CD 6000 PSI CODE 62 / SUPERCAT (C) / SUPERCAT 'D' RING (CD)*
STRAIGHT FLANGE

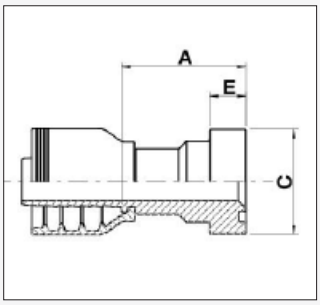

"Product Code"	Flange			Hose Bore			Dimensions mm		
	Bore	Size	Ø ins	DN	Inch	Size	A	C	E
C621-0808J	1/2"	08	1.1/4"	13	1/2"	08	39.7	31.7	7.8
C621-1212J	3/4"	12	1.5/8"	20	3/4"	12	43.5	41.3	8.8
C621-1612J	1"	16	1.7/8"	20	3/4"	12	59.0	47.6	9.5
C621-1216J	3/4"	12	1.5/8"	25	1"	16	56	41.3	8.8
C621-1616J	1"	16	1.7/8"	25	1"	16	60.5	47.6	9.5
C621-1620J	1"	16	1.7/8"	32	1.1/4"	20	67.4	47.6	9.5
C621-2016J	1.1/4"	20	2.1/8"	25	1"	16	67.5	54.0	10.3
C621-2020J	1.1/4"	20	2.1/8"	32	1.1/4"	20	71.9	54.0	10.3
C621-2024J	1.1/4"	20	2.1/8"	38	1.1/2"	24	70	54	10.3
C621-2420J	1.1/2"	24	2.3/8"	32	1.1/4"	20	81.4	63.5	12.6
C621-2424J	1.1/2"	24	2.3/8"	38	1.1/2"	24	76.0	63.5	12.6
C621-3232J	2"	32	3.1/8"	50	2"	32	88.5	79.4	12.6
C621C-1212J	3/4"	12	1.5/8"	20	3/4"	12	49.5	41.3	14.5
C621CD-1212J	3/4"	12	1.5/8"	20	3/4"	12	49.5	41.3	14.5
C621C-1612J	1"	16	1.7/8"	20	3/4"	12	64.0	47.6	14.5
C621CD-1612J	1"	16	1.7/8"	20	3/4"	12	64.0	47.6	14.5
C621C-1616J	1"	16	1.7/8"	25	1"	16	65.5	47.6	14.5
C621CD-1616J	1"	16	1.7/8"	25	1"	16	65.5	47.6	14.5
C621C-2016J	1.1/4"	20	2.1/8"	25	1"	16	73.0	54.0	14.5
C621CD-2016J	1.1/4"	20	2.1/8"	25	1"	16	73.0	54.0	14.5
C621C-2020J	1.1/4"	20	2.1/8"	32	1.1/4"	20	76.1	54.0	14.5
C621CD-2020J	1.1/4"	20	2.1/8"	32	1.1/4"	20	76.1	54.0	14.5

*CD type accomodates 'D' profile O-ring Pirtek part YD

PIRTEK

This page is part of a complete catalogue containing technical and safety data.
All data must be reviewed when selecting a product.
Pirtek reserve the right to change technical specifications without notice

SAE FLANGES

ORIGIN: NORTH AMERICA

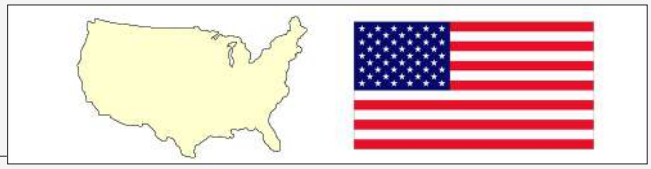

C623 6000 PSI CODE 62

30° ELBOW FLANGE

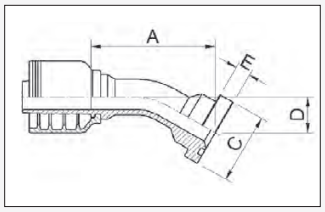

"Product Code"	Flange			Hose Bore			Dimensions mm			
	Bore	Size	Ø ins	DN	Inch	Size	A	C	D	E
C623-1616J	1"	16	1.7/8"	25	1"	16	90	47.6	19	9.5

C624/C624C/C624CD

6000 PSI CODE 62 / SUPERCAT (C) SUPERCAT 'D' RING (CD)*

45° ELBOW FLANGE

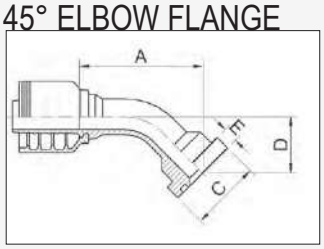

Product Code	Flange			Hose Bore			Dimensions (mm)			
	Bore	Size	ø ins.	DN	Inch	Size	A	øB	D	E
C624-1212J	3/4"	12	1.5/8"	20	3/4"	12	68.7	41.3	27.9	8.8
C624-1612J	1"	16	1.7/8"	20	3/4"	12	74.7	47.6	33.9	9.5
C624-1616J	1"	16	1.7/8"	25	1"	16	78.9	47.6	30.8	9.5
C624-1620J	1"	16	1.7/8"	32	1.1/4"	20	115.5	47.6	38.1	9.5
C624-2016J	1.1/4"	20	2.1/8"	25	1"	16	95.0	54.0	39.0	10.3
C624-2020J	1.1/4"	20	2.1/8"	32	1.1/4"	20	115.5	54.0	43.8	10.3
C624-2420J	1.1/2"	24	2.3/8"	32	1.1/4"	20	117.5	63.5	48.0	12.6
C624-2424J	1.1/2"	24	2.3/8"	38	1.1/2"	24	126.0	63.5	47.0	12.6
C624-3232J	2"	32	3.1/8"	50	2"	32	169.0	79.4	61.0	12.6
C624C-1212J	3/4"	12	1.5/8"	20	3/4"	12	85.4	41.3	32.5	14.5
C624CD-1212J	3/4"	12	1.5/8"	20	3/4"	12	85.4	41.3	32.5	14.5
C624C-1612J	1"	16	1.7/8"	20	3/4"	12	80.7	47.6	37.5	14.5
C624CD-1612J	1"	16	1.7/8"	20	3/4"	12	80.7	47.6	37.5	14.5
C624C-1616J	1"	16	1.7/8"	25	1"	16	82.2	54.0	34.7	14.5
C624CD-1616J	1"	16	1.7/8"	25	1"	16	82.2	54.0	34.7	14.5
C624C-2016J	1.1/4"	20	2.1/8"	25	1"	16	93.2	54.0	41.9	14.5
C624CD-2016J	1.1/4"	20	2.1/8"	25	1"	16	93.2	54.0	41.9	14.5

*CD type accomodates 'D' profile O-ring Pirtek part YD

This page is part of a complete catalogue containing technical and safety data.
All data must be reviewed when selecting a product.
Pirtek reserve the right to change technical specifications without notice

SAE FLANGES

ORIGIN: NORTH AMERICA

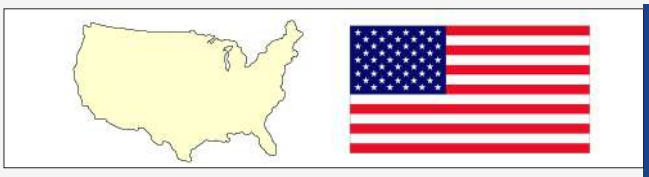

C626C/C626CD

6000 PSI SUPERCAT(C) / SUPERCAT 'D' RING (CD)*

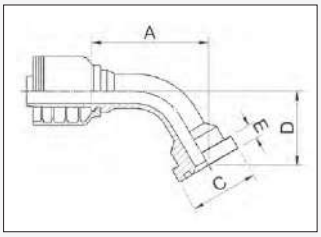

Product Code	Flange			Hose Bore			Dimensions (mm)			
	Bore	Size	ø ins.	DN	Inch	Size	A	C	D	E
C626C-1616J	1"	16	1.7/8"	25	1"	16	103.0	54.0	47.8	14.5
C626CD-1616J	1"	16	1.7/8"	25	1"	16	103.0	54.0	47.8	14.5

*CD type accomodates 'D' profile O-ring Pirtek part YD

C627/C627C/C627CD

6000 PSI CODE 62 / SUPERCAT (C) / SUPERCAT 'D' RING (CD)*

67.5° ELBOW FLANGE

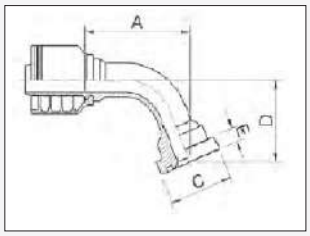

Product Code	Flange			Hose Bore			Dimensions (mm)			
	Bore	Size	ø ins.	DN	Inch	Size	A	C	D	E
C627-1616J-050	1"	16	1.7/8"	25	1"	16	96	47.6	49.8	9.5
C627C-1616J	1"	16	1.7/8"	25	1"	16	102.0	47.6	54.0	14.5
C627CD-1616J	1"	16	1.7/8"	25	1"	16	102.0	47.6	54.0	14.5

*CD type accomodates 'D' profile O-ring Pirtek part YD

C629 / C629C / C629CD

6000 PSI CODE 62 / SUPERCAT (C) / SUPERCAT 'D' RING (CD)*

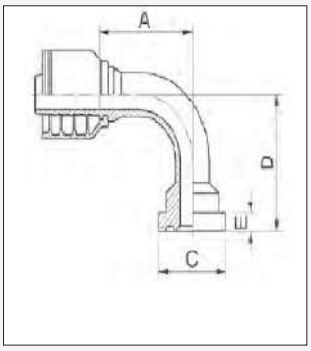

"Product Code"	Flange			Hose Bore			Dimensions mm			
	Bore	Size	Ø ins	DN	Inch	Size	A	C	D	E
C629-0808J	1/2"	08	1.1/4"	13	1/2"	08	49.7	31.7	47.0	7.8
C629-0810J	1/2"	08	1.1/4"	16	5/8"	10	55.0	31.7	52.0	7.8
C629-1210J	3/4"	12	1.5/8"	16	5/8"	10	53.5	41.3	58.0	8.8
C629-1212J	3/4"	12	1.5/8"	20	3/4"	12	55.5	41.3	56.5	8.8
C629-1612J	1"	16	1.7/8"	20	3/4"	12	55.5	47.6	65.0	9.5
C629-1616J	1"	16	1.7/8"	25	1"	16	76.0	47.6	66.0	9.5
C629-1616J-130	1"	16	1.7/8"	25	1"	16	76.0	47.6	130.0	9.5
C629-1620J	1"	16	1.7/8"	32	1.1/4"	20	104.0	47.6	87.0	9.5
C629-2016J	1.1/4"	20	2.1/8"	25	1"	16	78.5	54.0	79.5	10.3
C629-2020J	1.1/4"	20	2.1/8"	32	1.1/4"	20	104.0	54.0	86.0	10.3
C629-2420J	1.1/2"	24	2.3/8"	32	1.1/4"	20	104.2	63.5	98.0	12.6
C629-2424J	1.1/2"	24	2.3/8"	38	1.1/2"	24	111.0	63.5	104.0	12.6
C629-3232J	2"	32	3.1/8"	50	2"	32	149.3	79.4	134.0	12.6
C629C-1212J	3/4"	12	1.5/8"	20	3/4"	12	55.5	41.3	62.0	14.5
C629CD-1212J	3/4"	12	1.5/8"	20	3/4"	12	55.5	41.3	62.0	14.5
C629C-1212J-156	3/4"	12	1.5/8"	20	3/4"	12	62.5	41.3	155.7	14.5
C629CD-1212J-156	3/4"	12	1.5/8"	20	3/4"	12	62.5	41.3	155.7	14.5
C629C-1612J	1"	16	1.7/8"	20	3/4"	12	55.5	47.6	70.0	14.5
C629CD-1612J	1"	16	1.7/8"	20	3/4"	12	55.5	47.6	70.0	14.5
C629C-1616J	1"	16	1.7/8"	25	1"	16	75.6	54.0	71.0	14.5
C629CD-1616J	1"	16	1.7/8"	25	1"	16	75.6	54.0	71.0	14.5
C629CD-1616J-135	1"	16	1.7/8"	25	1"	16	75	54	135	14.5
C629C-2016J	1.1/4"	20	2.1/8"	25	1"	16	74.6	54.0	84.0	14.5
C629CD-2016J	1.1/4"	20	2.1/8"	25	1"	16	74.6	54.0	84.0	14.5

*CD type accomodates 'D' profile O-ring Pirtek part YD

PIRTEK

This page is part of a complete catalogue containing technical and safety data.
All data must be reviewed when selecting a product.
Pirtek reserve the right to change technical specifications without notice

SAE FLANGES
ORIGIN: NORTH AMERICA

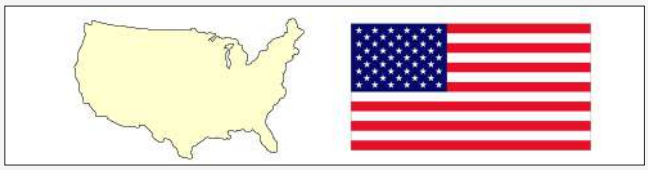

C621TF
6000 PSI CODE 62 TAPERED STRAIGHT FLANGE

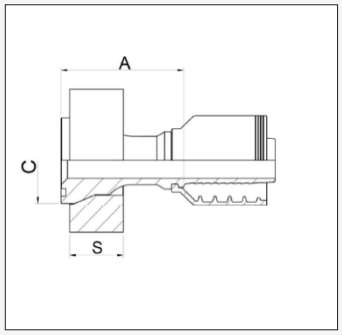

"Product Code"	Flange		Hose Bore			Dimensions (mm)			
	Bore	Size	DN	Inch	Size	A	c	S	
C621TF-1616J	1"	16	25	1"	16	80	47.6	31	
C621TF-2016J	1.1/4"	20	25	1"	16	79	54	35	

C624TF
6000 PSI CODE 62 TAPERED 45º FLANGE

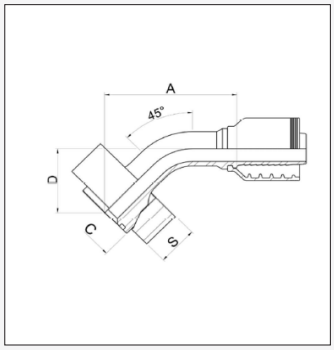

"Product Code"	Flange		Hose Bore			Dimensions (mm)			
	Bore	Size	DN	Inch	Size	A	D	C	S
C624TF-1616J-050	1"	16	25	1"	16	101	50	47.6	31
C624TF-2016J-050	1.1/4"	20	25	1"	16	104	50	54	35

C629TF
6000 PSI CODE 62 TAPERED 90º FLANGE

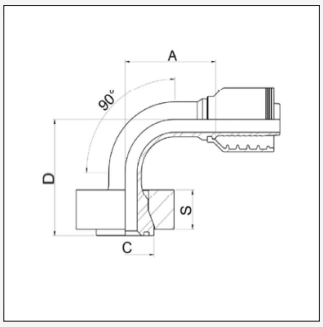

"Product Code"	Flange		Hose Bore			Dimensions (mm)			
	Bore	Size	DN	Inch	Size	A	D	C	S
C629TF-1616J-090	1"	16	25	1"	16	75	90	47.6	31
C629TF-2016J-105	1.1/4"	20	25	1"	16	81	105	54	35

This page is part of a complete catalogue containing technical and safety data.
All data must be reviewed when selecting a product.
Pirtek reserve the right to change technical specifications without notice

THIS PAGE IS INTENTIONALLY BLANK

JAPANESE FITTINGS

ORIGIN: JAPAN

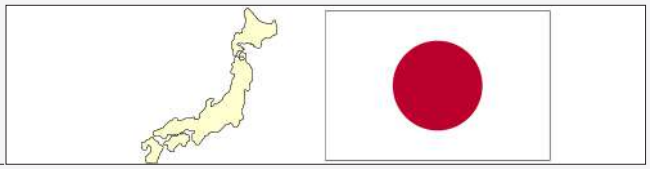

JBF1

JIS BSPP

FEMALE STRAIGHT (MITSUBISHI)

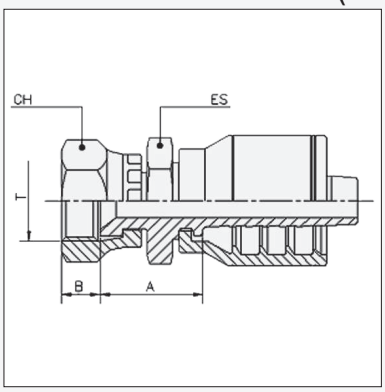

Product Code	Thread			Hose Bore			Dimensions (mm)			
	BSPP	Size	Pipe	DN	Inch	Size	A	B	CH	ES
JBF1-0404K	1/4" - 19	04	1/4"	06	1/4"	04	21	8	19	19
JBF1-0604K	3/8" - 19	6	3/8"	6	1/4"	4	22	9.5	22	19
JBF1-0606K	3/8" - 19	06	3/8"	10	3/8"	06	22	9.5	22	19
JBF1-0808K	1/2" - 14	08	1/2"	12	1/2"	08	24.9	11	27	22
JBF1-1212J	3/4" - 14	12	3/4"	20	3/4"	12	29.5	12.5	32	30
JBF1-1616J	1" - 11	16	1"	25	1"	16	34.1	14	38	32

JBF9

JIS BSPP

FEMALE 90 º (MITSUBISHI)

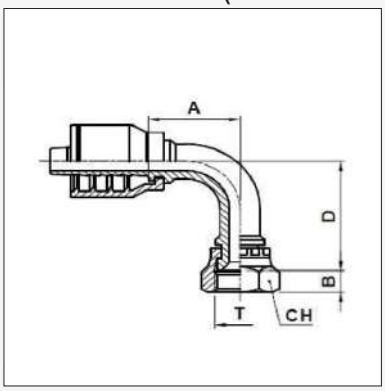

"Product Code"	Thread			Hose Bore			Dimensions mm			
	BSPP	Size	Pipe	DN	Inch	Size	A	B	D	CH
JBF9-0404K	1/4" - 19	04	1/4"	6	1/4"	04	25.3	8	24.5	19
JBF9-0604K	3/8" - 19	06	3/8"	6	1/4"	04	25.3	9.5	26	22
JBF9-0606K	3/8" - 19	06	3/8"	10	3/8"	06	36	9.5	30	22
JBF9-0808K	1/2" - 14	08	1/2"	12	1/2"	08	38.5	11	42	27

PIRTEK

This page is part of a complete catalogue containing technical and safety data.
All data must be reviewed when selecting a product.
Pirtek reserve the right to change technical specifications without notice

JAPANESE FITTINGS

ORIGIN: JAPAN

JMF1

JIS METRIC
FEMALE STRAIGHT (KOMATSU)

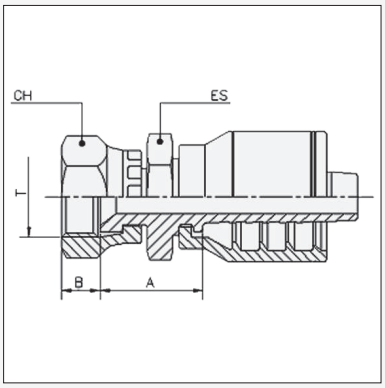

Product Code	Thread			Hose Bore			Dimensions (mm)			
	Metric	Size	Pipe	DN	Inch	Size	A	B	CH	ES
JMF1-1204K	M12 x 1.5	12	12	06	1/4”	04	22.5	8.7	17	14
JMF1-1404K	M14 x 1.5	14	14	06	1/4”	04	24	10	19	19
JMF1-1406K	M14 x 1.5	14	14	10	3/8”	06	25	10	19	19
JMF1-1606K	M16 x 1.5	16	16	10	3/8”	06	23.2	9.3	22	19
JMF1-1806K	M18 x 1.5	18	18	10	3/8”	06	24	11.5	24	19
JMF1-2006K	M20 x 1.5	20	20	10	3/8”	06	25.3	11.2	27	19
JMF1-2206K	M22 x 1.5	22	22	10	3/8”	06	25.5	14	27	19
JMF1-2208K	M22 x 1.5	22	22	12	1/2”	08	27	14	27	22
JMF1-2408K	M24 x 1.5	24	24	12	1/2”	08	28.4	15.1	32	24
JMF1-2410K	M24 x 1.5	24	24	16	5/8”	10	28.4	15.1	32	24
JMF1-2412J	M24 x 1.5	24	24	20	3/4”	12	32.4	15.1	32	27
JMF1-3012J	M30 x 1.5	30	30	20	3/4”	12	34.7	18.3	36	30
JMF1-3312J	M33 x 1.5	33	33	20	3/4”	12	33.7	21.3	41	32
JMF1-3612J	M36 x 1.5	36	36	20	3/4”	12	34.7	20	46	41
JMF1-3316J	M33 x 1.5	33	33	25	1”	16	35.8	21.3	41	32
JMF1-3616J	M36 x 1.5	36	36	25	1”	16	37.3	20	46	41
JMF1-4220J	M42 x 1.5	42	42	32	1.1/4”	20	46	18.8	55	50

JMF9

JIS METRIC FEMALE 90º ELBOW

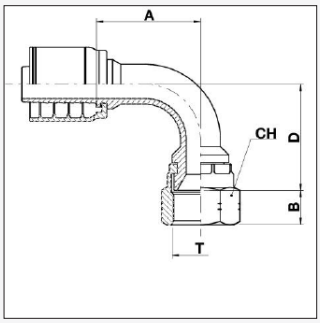

"Product Code"	Thread			Hose Bore			Dimensions (mm)			
	Metric	Size	Pipe	DN	Inch	Size	A	B	D	CH
JMF9-1404K	M14 x 1.5	14	14	06	1/4	04	29	10	31.5	19
JMF9-1604K	M16 x 1.5	16	16	06	1/4	04	29.5	9.3	37	22
JMF9-1606K	M16 x 1.5	16	16	10	3/8	06	36	9.3	31.5	22
JMF9-1806K	M18 x 1.5	18	18	10	3/8	06	35.5	11.5	38	24
JMF9-2208K	M22 x 1.5	22	22	12	1/2	08	47.5	14	43	27
JMF9-2412J	M24 x 1.5	24	24	20	3/4	12	55.5	15.1	55	32
JMF9-3012J	M30 x 1.5	30	30	20	3/4	12	55	18.3	56	36

KOBM1

JIS METRIC 24° SEAT
MALE STRAIGHT (KOBELCO)

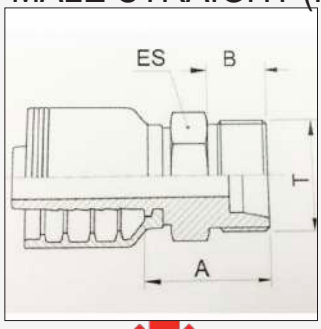

Product Code	Thread			Hose Bore			Dimensions (mm)		
	Metric	Size	Pipe	DN	Inch	Size	A	B	ES
KOBM1-3012J	M30x1.5	30	30	20	3/4	12	32.5	14	36
KOBM1-3612J	M36x1.5	36	36	20	3/4	12	38	16	41
KOBM1-3616J	M36x1.5	36	36	25	1	16	39.1	16	41
KOBM1-4516J	M45x1.5	45	45	25	1	16	40	16	50

PIRTEK

This page is part of a complete catalogue containing technical and safety data.
All data must be reviewed when selecting a product.
Pirtek reserve the right to change technical specifications without notice

JAPANESE FITTINGS
ORIGIN: JAPAN

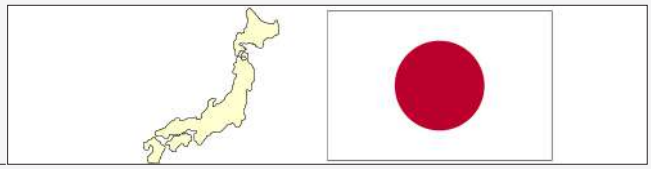

KC6112BF
KOMATSU LOW PRESSURE (80 BAR)
STRAIGHT FLANGE WITH 2 BOLT CLAMP

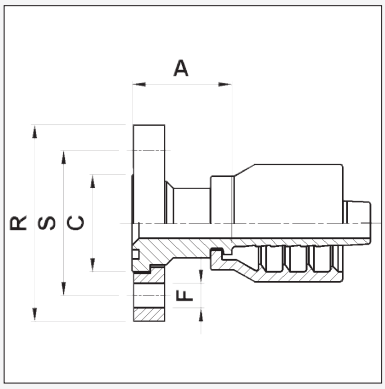

Product Code	Flange			Hose Bore			Dimensions (mm)					
	Bore	Size	ø ins.	DN	Inch	Size	A	R	S	C	F	
KC6112BF-1616J	1”	16	1.3/4”	25	1”	16	74.1	88	65	44.5	11	
KC6112BF-2020J	1.1/4”	20	2”	32	1.1/4”	20	82.9	102	75	50.8	13.5	
KC6112BF-2424J	1.1/2”	24	2.3/8”	38	1.1/2”	24	91	111	85	60.3	13.5	

KOM identifier can vary between flange head and stem. Flange heads incorporate metric O-Ring dimensions

See page 28

KC6142BF
KOMATSU LOW PRESSURE (80 BAR)
45° ELBOW FLANGE WITH 2 BOLT CLAMP

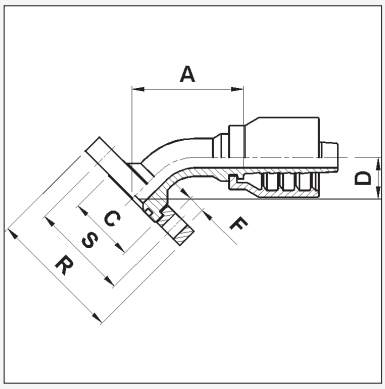

Product Code	Flange			Hose Bore			Dimensions (mm)					
	Bore	Size	ø ins.	DN	Inch	Size	A	R	S	C	F	D
KC6142BF-1616J	1”	16	1.3/4”	25	1”	16	84.1	88	65	44.5	11	30
KC6142BF-2020J	1.1/4”	20	2”	32	1.1/4”	20	107.9	102	75	50.8	13.5	32
KC6142BF-2424J	1.1/2”	24	2.3/8”	38	1.1/2”	24	105	111	85	60.3	13.5	38

KOM identifier can vary between flange head and stem. Flange heads incorporate metric O-Ring dimensions

See page 28

KC6192BF
KOMATSU LOW PRESSURE (80 BAR)
90° ELBOW FLANGE WITH 2 BOLT CLAMP

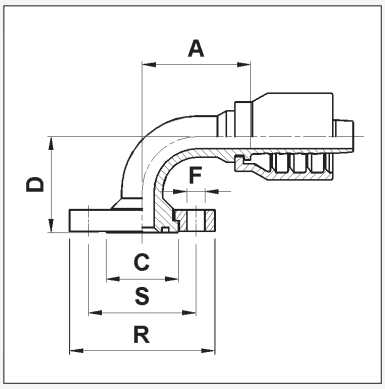

Product Code	Flange			Hose Bore			Dimensions (mm)					
	Bore	Size	ø ins.	DN	Inch	Size	A	R	S	C	F	D
KC6192BF-1616J	1”	16	1.3/4”	25	1”	16	79.1	88	65	44.5	11	70
KC6192BF-2020J	1.1/4”	20	2”	32	1.1/4”	20	102.9	102	75	50.8	13.5	80
KC6192BF-2424J	1.1/2”	24	2.3/8”	38	1.1/2”	24	118	111	85	60.3	13.5	110

KOM identifier can vary between flange head and stem. Flange heads incorporate metric O-Ring dimensions

See page 28

PIRTEK

This page is part of a complete catalogue containing technical and safety data.
All data must be reviewed when selecting a product.
Pirtek reserve the right to change technical specifications without notice

JAPANESE FITTINGS
ORIGIN: JAPAN

KC611
KOMATSU STANDARD PRESSURE (210 BAR)
STRAIGHT FLANGE

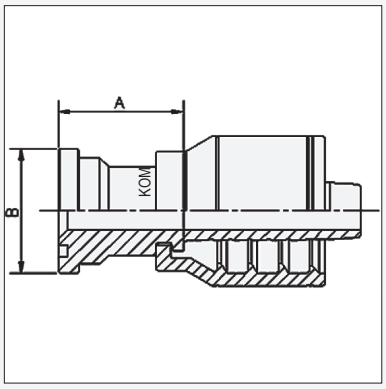

Product Code	Flange			Hose Bore			Dimensions (mm)				
	Bore	Size	ø ins.	DN	Inch	Size	A	ø B			
C611-1010K	5/8”	10	1.3/8”	16	5/8”	10	65	34.1			
KC611-1212J	3/4”	12	1.1/2”	20	3/4”	12	72	38			
KC611-1612J	1”	16	1.3/4”	20	3/4”	12	71	44.45			
KC611-1616J	1”	16	1.3/4”	25	1”	16	74.1	44.45			
KC611-2016J	1.1/4”	20	2”	25	1”	16	81.1	50.8			
KC611-2020J	1.1/4”	20	2”	32	1.1/4”	20	82.9	50.8			
KC611-2424J	1.1/2”	24	2.3/8“	38	1.1/2”	24	91	60.3			
KC611-3232J	2”	32	2.13/32”	50	2”	32	122.7	71.4			

KOM identifier can vary between flange head and stem. Flange heads incorporate metric O-Ring dimensions
See page 28

KC614
KOMATSU STANDARD PRESSURE (210 BAR)
45° ELBOW FLANGE

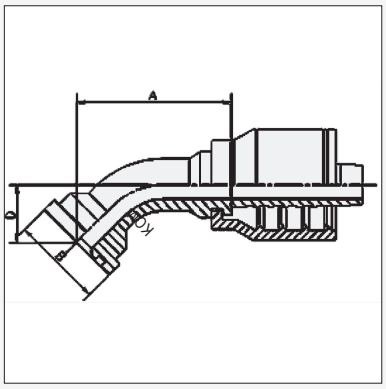

Product Code	Flange			Hose Bore			Dimensions (mm)				
	Bore	Size	ø ins.	DN	Inch	Size	A	ø B	D		
C614-1010K	5/8”	10	1.11/32”	16	5/8”	10	66	34.1	26		
KC614-1212J	3/4”	12	1.1/2”	20	3/4”	12	70	38	26		
KC614-1612J	1”	16	1.3/4”	20	3/4”	12	73	44.5	31		
KC614-1616J	1”	16	1.3/4”	25	1”	16	84.1	44.5	30		
KC614-2016J	1.1/4”	20	2”	25	1”	16	87.1	50.8	28		
KC614-2020J	1.1/4”	20	2”	32	1.1/4”	20	107.9	50.8	32		
KC614-2424J	1.1/2”	24	2.3/8”	38	1.1/2”	24	105	60.3	38		
KC614-3232J	2”	32	2.13/32”	50	2”	32	161.7	71.4	54		

KOM identifier can vary between flange head and stem. Flange heads incorporate metric O-Ring dimensions
See page 28

KC619
KOMATSU STANDARD PRESSURE (210 BAR)
90° ELBOW FLANGE

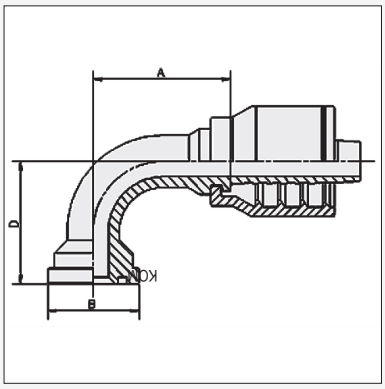

Product Code	Flange			Hose Bore			Dimensions (mm)				
	Bore	Size	ø ins.	DN	Inch	Size	A	ø B	D		
C619-1010K	5/8”	10	1.3/8”	16	5/8”	5/8”	55.5	34.1	55		
KC619-1212J	3/4”	12	1.1/2”	20	3/4”	3/4”	64	38	55		
KC619-1612J	1”	16	1.3/4”	20	3/4”	3/4”	78	44.45	61		
KC619-1616J	1”	16	1.3/4”	25	1”	1”	79.1	44.45	70		
KC619-2020J	1.1/4”	20	2”	32	1.1/4”	1.1/4”	102.9	50.8	80		
KC619-2424J	1.1/2”	24	2.3/8”	38	1.1/2”	1.1/2”	118	60.3	110		
KC619-3232J	2”	32	2.13/32”	50	2”	2”	151.7	71.4	140		

KOM identifier can vary between flange head and stem. Flange heads incorporate metric O-Ring dimensions
See page 28

PIRTEK

**This page is part of a complete catalogue containing technical and safety data.
All data must be reviewed when selecting a product.
Pirtek reserve the right to change technical specifications without notice**

MISCELLANEOUS FITTINGS

KT1

KÄRCHER® STRAIGHT HOSE TAIL COMPLETE WITH NUT

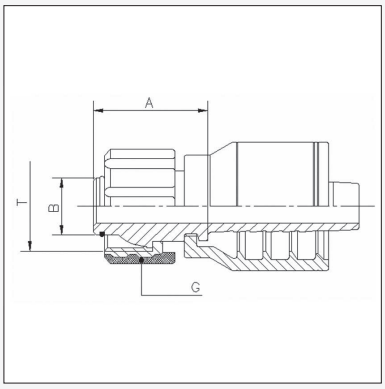

Product Code	Hose Bore			Dimensions (mm)			
	DN	Inch	Size	T	A	B	G
KT1-2204K	6	1/4"	4	M22 x 1.5	31	14	36
KT1-2205K	8	5/16"	5	M22 x 1.5	31	14	36
KT1-2206K	10	3/8"	6	M22 x 1.5	31	14	36

JWH

JET WASH HANDGRIP

Product Code	Hose Bore			Description
	DN	Inch	Size	
JWH-04	6	1/4"	04	Blue Anti Kink Hand Grip to suit JW210-04 hose
JWH-06	10	3/8"	06	Blue Anti Kink Hand Grip to suit JW210-06 & JW400-06 hose

RG1

ROLL GROOVED PIPE HOSE TAIL

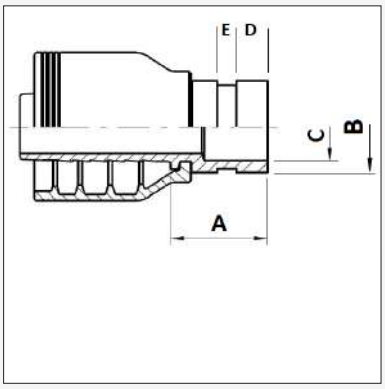

"Product Code"	Hose Bore			Dimensions				
	DN	Inch	Size	A	B	C	D	E
RG1-3232J	50	2"	32	52	60.3	53.7	15.8	8.7
RG1-4040J	63	2.1/2"	40	108	73	63.4	16	8.4

PIRTEK

This page is part of a complete catalogue containing technical and safety data.
All data must be reviewed when selecting a product.
Pirtek reserve the right to change technical specifications without notice

WO1

WELD ON STRAIGHT TAIL (LIFESAVER)

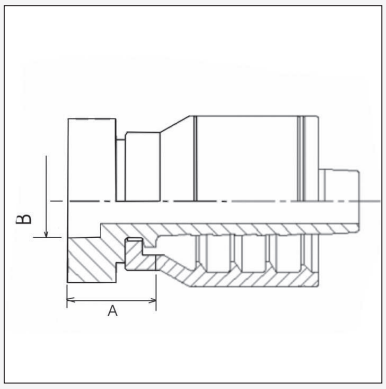

Product Code	Flange			Hose Bore			Dimensions (mm)					
	Bore	Size	ø ins.	DN	Inch	Size	A	ø B				
WO1-0404K	04	04	1/4”	06	1/4”	04	14.5	6.5				
WO1-0606K	06	06	3/8”	10	3/8”	06	10.5	9.55				
WO1-0808K	08	08	1/2”	12	1/2”	08	17	12.85				
WO1-1010K	10	10	5/8”	16	5/8”	10	17	16				
WO1-1212J	12	12	3/4”	20	3/4”	12	20	19.2				
WO1-1616J	16	16	1”	25	1”	16	24.1	25.6				

HJ1

HOSE JOINER CRIMP STYLE

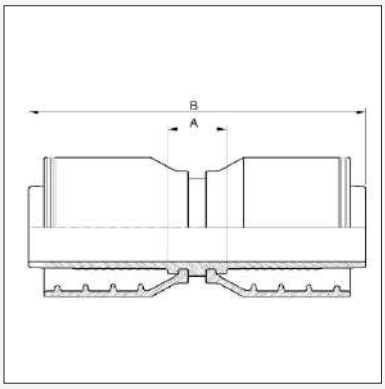

Product Code	Hose Tail			Hose Tail			Dimensions		
	DN	Inch	Size	DN	Inch	Size	A	B	
HJ1-0404K	6	1/4"	04	6	1/4"	04	13.0	68.0	
HJ1-0505K	8	5/16"	05	8	5/16"	05	13.0	68.0	
HJ1-0606K	10	3/8"	06	10	3/8"	06	13.0	72.0	
HJ1-0808K	12	1/2"	08	12	1/2"	08	14.0	77.0	
HJ1-1010K	16	5/8"	10	16	5/8"	10	14.0	83.0	
HJ1-1212J	20	3/4"	12	20	3/4"	12	16.0	95.0	
HJ1-1616J	25	1"	16	25	1"	16	19.0	125.0	

HJ9

HOSE JOINER 90º CRIMP STYLE

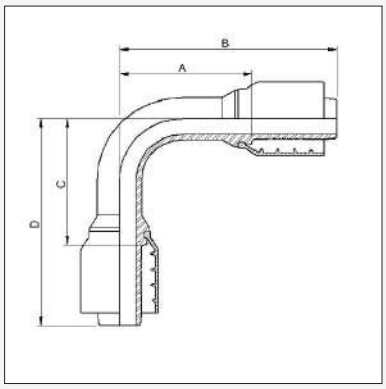

"Product Code"	Hose Bore			Dimensions mm			
	DN	Inch	Size	A	B	C	D
HJ9-1212J	19	3/4"	12	55.5	95	55.5	95
HJ9-1616J	25	1"	16	72	125	72	125

BSP FITTINGS

ORIGIN: GREAT BRITAIN

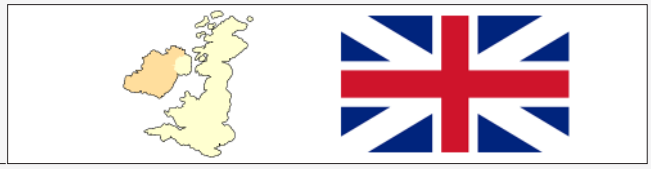

BF1

BSPP FEMALE STRAIGHT

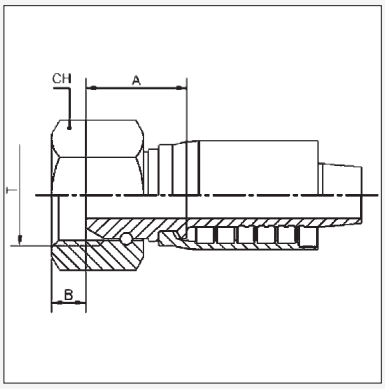

Product Code	BSPP Thread		Nominal ID			Dimensions mm			
	T	Size	Dash	Inch	DN	A	B	CH	
BF1-1212X	3/4" - 14	12	20	3/4"	12	27.9	8.7	32	
BF1-1616X	1" - 11	16	25	1"	16	31.3	10.5	38	
BF1-2020X	1.1/4" - 11	20	32	1.1/4"	20	37.8	10	50	
BF1-2424X	1.1/2" - 11	24	38	1.1/2"	24	38.3	12	55	
BF1-3232X	2" - 11	32	50	2"	32	40.6	16	70	

BF4

BSPP FEMALE 45° ELBOW

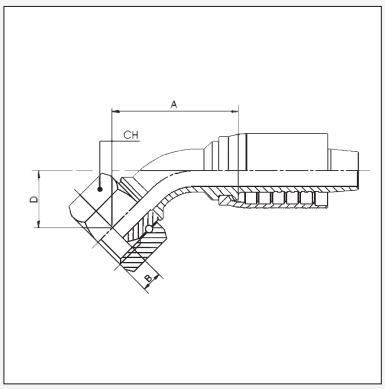

Product Code	BSPP Thread		Nominal ID			Dimensions mm			
	T	Size	Dash	Inch	DN	A	B	CH	D
BF4-1212X	3/4" - 14	12	20	3/4"	12	74.2	8.7	32	28.3
BF4-1616X	1" - 11	16	25	1"	16	89.3	10.5	38	32
BF4-2020X	1.1/4" - 11	20	32	1.1/4"	20	106.4	10	50	37.7
BF4-2424X	1.1/2" - 11	24	38	1.1/2"	24	162	12	55	51
BF4-3232X	2" - 11	32	50	2"	32	197	16	70	65.5

PIRTEK

This page is part of a complete catalogue containing technical and safety data.
All data must be reviewed when selecting a product.
Pirtek reserve the right to change technical specifications without notice

BSP FITTINGS
ORIGIN: GREAT BRITAIN

BF9
BSPP FEMALE 90° ELBOW

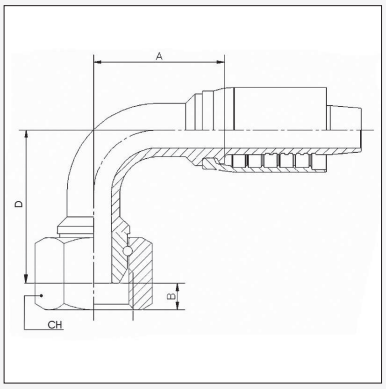

Product Code	BSPP Thread		Nominal ID			Dimensions mm			
	T	Size	Dash	Inch	DN	A	B	CH	D
BF9-1212X	3/4" - 14	12	20	3/4"	12	66.8	8.7	32	58.8
BF9-1616X	1" - 11	16	25	1"	16	77.3	10.5	38	71
BF9-2020X	1.1/4" - 11	20	32	1.1/4"	20	91.5	10	50	83
BF9-2424X	1.1/2" - 11	24	38	1.1/2"	24	132	12	55	108
BF9-3232X	2" - 11	32	50	2"	32	157	16	70	140

BTM1
BSPT MALE STRAIGHT

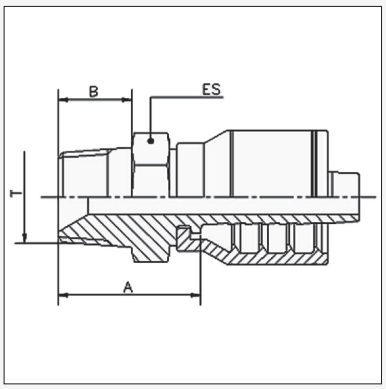

Product Code	BSPT Thread		Nominal ID			Dimensions mm			
	T	Size	Dash	Inch	DN	A	B	ES	
BTM1-2020X	1.1/4" - 11	20	32	1.1/4"	20	52.9	25	46	
BTM1-2424X	1.1/2" - 11	24	38	1.1/2"	24	53.5	25	50	
BTM1-3232X	2" - 11	32	50	2"	32	63.7	28	65	

NPT FITTINGS

ORIGIN: NORTH AMERICA

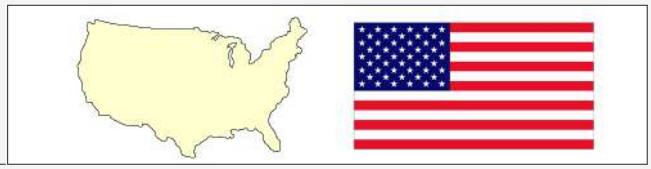

NM1

NPT MALE STRAIGHT

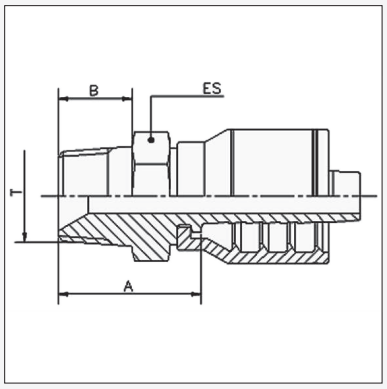

Product Code	NPT Thread		Nominal ID			Dimensions mm			
	T	Size	Dash	Inch	DN	A	B	ES	
NM1-2020X	1.1/4" - 11½	20	32	1.1/4"	20	62.9	24.5	46	
NM1-2424X	1.1/2" - 11½	24	38	1.1/2"	24	61.5	25.5	50	
NM1-3232X	2" - 11½	32	50	2"	32	79.7	26	65	

PIRTEK

This page is part of a complete catalogue containing technical and safety data.
All data must be reviewed when selecting a product.
Pirtek reserve the right to change technical specifications without notice

JIC FITTINGS
ORIGIN: NORTH AMERICA

JF1
JIC FEMALE STRAIGHT

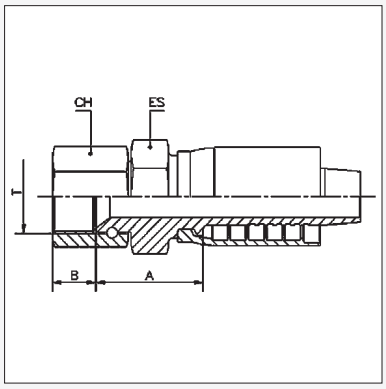

Product Code	JIC Thread			Hose Bore			Dimensions (mm)			
	Thread	Size	Tube	DN	Inch	Size	A	B	CH	ES
JF1-1712X †	1.1/16" - 12	17	12	20	3/4"	12	37.1	13.8	32	27
JF1-2116X †	1.5/16" - 12	21	16	25	1"	16	37.3	16	38	36
JF1-2620X †	1.5/8" - 12	26	20	32	1.1/4"	20	51.5	16	50	41
JF1-3024X †	1.7/8" - 12	30	24	38	1.1/2"	24	54.4	18.5	55	50
JF1-4032X †	2.1/2" - 12	40	32	50	2"	32	77.7	24	75	65

† Thrust wired nut

JF4
JIC FEMALE 45° ELBOW

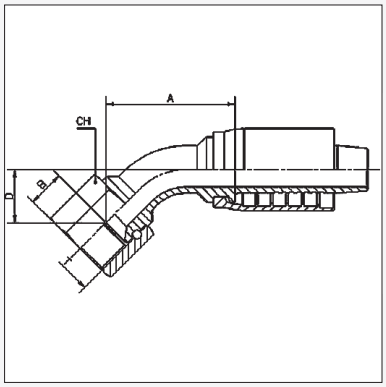

Product Code	JIC Thread			Hose Bore			Dimensions (mm)			
	Thread	Size	Tube	DN	Inch	Size	A	B	D	CH
JF4-1712X †	1.1/16" - 12	17	12	20	3/4"	12	79.3	13.5	30.5	32
JF4-2116X †	1.5/16" - 12	21	16	25	1"	16	89.3	16	32	38
JF4-2620X †	1.5/8" - 12	26	20	32	1.1/4"	20	99.4	16	36.3	50
JF4-3024X †	1.7/8" - 12	30	24	38	1.1/2"	24	162.5	18.5	50	55
JF4-4032X †	2½" - 12	40	32	50	2"	32	197	24	65.5	75

† Thrust wired nut

JIC FITTINGS
ORIGIN: NORTH AMERICA

JF9
JIC FEMALE 90° ELBOW

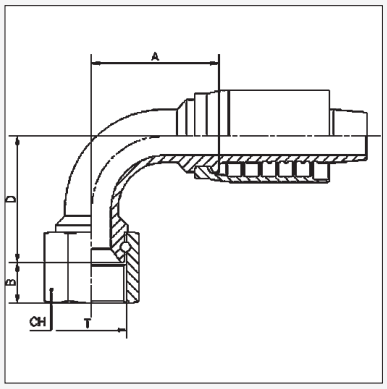

Product Code	JIC Thread			Hose Bore			Dimensions (mm)			
	Thread	Size	Tube	DN	Inch	Size	A	B	D	CH
JF9-1712X †	1.1/16" - 12	17	12	20	3/4"	12	71	13.8	58.8	32
JF9-2116X †	1.5/16" - 12	21	16	25	1"	16	77.3	16	71	38
JF9-2620X †	1.5/8" - 12	26	20	32	1.1/4"	20	84.4	16	77	50
JF9-3024X †	1.7/8" - 12	30	24	38	1.1/2"	24	128.5	18.5	105	55
JF9-4032X †	2½" - 12	40	32	50	2"	32	157	24	140	75

† Thrust wired nut

JM1
JIC MALE STRAIGHT

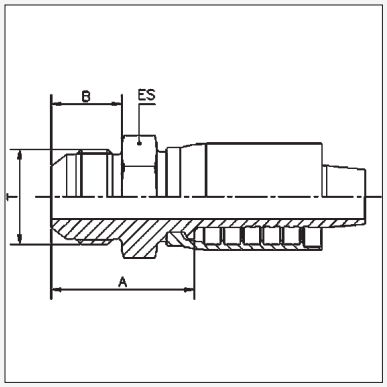

Product Code	JIC Thread			Hose Bore			Dimensions (mm)			
	Thread	Size	Tube	DN	Inch	Size	A	B	ES	
JM1-2620X †	1.5/8" - 12	26	20	32	1.1/4"	20	62.7	24.3	46	
JM1-3024X †	1.7/8" - 12	30	24	38	1.1/2"	24	63.5	27.5	50	
JM1-4032X †	2½" - 12	40	32	50	2"	32	87.6	33.9	65	

PIRTEK

This page is part of a complete catalogue containing technical and safety data.
All data must be reviewed when selecting a product.
Pirtek reserve the right to change technical specifications without notice

ORFS FITTINGS
ORIGIN: NORTH AMERICA

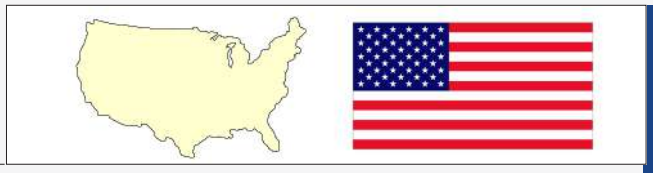

OF1
O-RING FACE SEAL FEMALE STRAIGHT

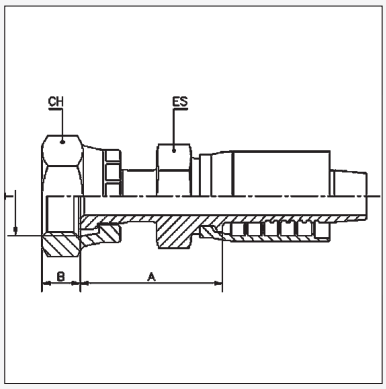

Product Code	UN Thread			Hose Bore			Dimensions (mm)			
	Thread	Size	Tube	DN	Inch	Size	A	B	CH	ES
OF1-1212X	1.3/16" - 12	12	12	20	3/4"	12	45.7	14.5	36	30
OF1-1616X	1.7/16" - 12	16	16	25	1"	16	52.8	14.8	41	36
OF1-2020X	1.11/16" - 12	20	20	32	1.1/4"	20	55.9	14.8	50	41
OF1-2424X	2" -12	24	24	25	1.1/2"	24	58.7	14.8	60	50

OF4
O-RING FACE SEAL FEMALE 45° ELBOW

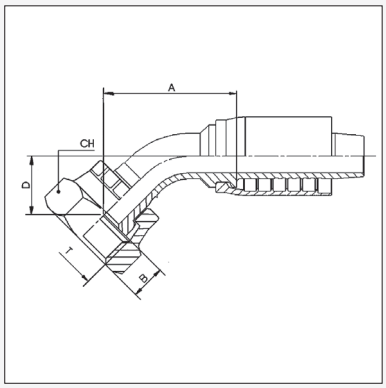

Product Code	UN Thread			Hose Bore			Dimensions (mm)			
	Thread	Size	Tube	DN	Inch	Size	A	B	CH	D
OF4-1212X	1.3/16" - 12	12	12	20	3/4"	12	70.5	14.5	36	23.2
OF4-1616X	1.7/16" - 12	16	16	25	1"	16	88.3	14.8	41	31
OF4-2020X	1.11/16" - 12	20	20	32	1.1/4"	20	99.4	14.8	50	36.3

OF9
O-RING FACE SEAL FEMALE 90° ELBOW

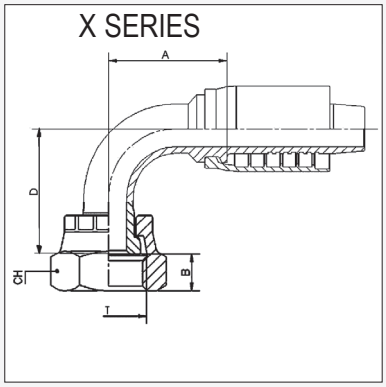

Product Code	UN Thread			Hose Bore			Dimensions (mm)			
	Thread	Size	Tube	DN	Inch	Size	A	B	CH	D
OF9-1212X	1.3/16" - 12	12	12	20	3/4"	12	66	14.5	36	51.5
OF9-1616X	1.7/16" - 12	16	16	25	1"	16	77.3	14.8	41	71
OF9-2020X	1.11/16" - 12	20	20	32	1.1/4"	20	84.4	14.8	50	77
OF9-2424X	2" - 12	24	24	38	1.1/2"	24	115	14.8	60	102

This page is part of a complete catalogue containing technical and safety data.
All data must be reviewed when selecting a product.
Pirtek reserve the right to change technical specifications without notice

METRIC FITTINGS
ORIGIN: GERMANY

DSF1
DKS (HEAVY) METRIC FEMALE STRAIGHT

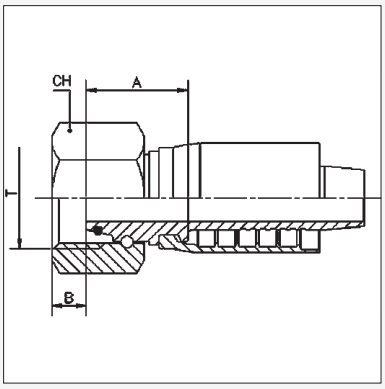

Product Code	Metric Thread			Hose Bore			Dimensions (mm)			
	Thread	Size	Tube	DN	Inch	Size	A	B	CH	
DSF1-3012X	M30 x 2	30	20 S	20	3/4"	12	34	3.5	36	
DSF1-3612X	M36 x 2	36	25 S	20	3/4"	12	41.6	3	46	
DSF1-4216X	M42 x 2	42	30 S	25	1”	16	36.8	6	50	
DSF1-5220X	M52 x 2	52	38 S	32	1.1/4”	20	48.9	6.5	60	

DSM1
DKS (HEAVY) METRIC MALE STRAIGHT

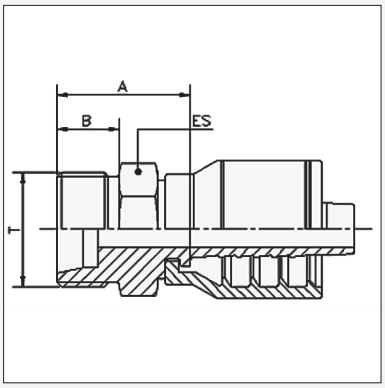

Product Code	Metric Thread			Hose Bore			Dimensions (mm)			
	Thread	Size	Tube	DN	Inch	Size	A	B	ES	
DSM1-4216X	M42 x 2	42	30 S	25	1”	16	45.8	20	46	
DSM1-5220X	M52 x 2	52	38 S	32	1.1/4”	20	49.9	22	55	

PIRTEK

This page is part of a complete catalogue containing technical and safety data.
All data must be reviewed when selecting a product.
Pirtek reserve the right to change technical specifications without notice

METRIC FITTINGS
ORIGIN: GERMANY

DSF4
DKS (HEAVY) METRIC FEMALE
45° ELBOW

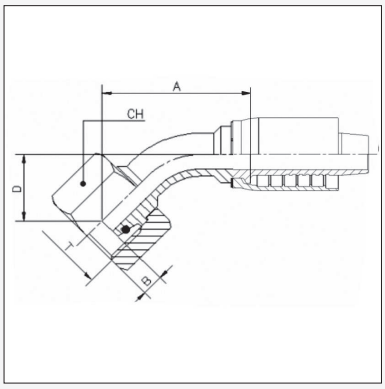

Product Code	Metric Thread			Hose Bore			Dimensions (mm)			
	Thread	Size	Tube	DN	Inch	Size	A	B	D	CH
DSF4-3012X	M30 x 2	20	20 S	20	3/4”	12				
DSF4-4216X	M42 x 2	42	30 S	25	1”	16	103.3	6	42	50
DSF4-5220X	M52 x 2	52	38 S	32	1.1/4”	20	123.3	6.5	45.6	60

DSF9
DKS (HEAVY) METRIC FEMALE
90° ELBOW

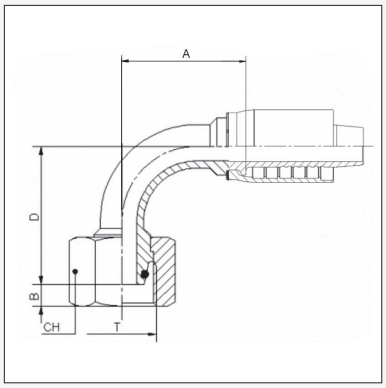

Product Code	Metric Thread			Hose Bore			Dimensions (mm)			
	Thread	Size	Tube	DN	Inch	Size	A	B	D	CH
DSF9-3012X	M30 x 2	20	20 S	20	3/4”	12				
DSF9-4216X	M42 x 2	42	30 S	25	1”	16	86.8	6	81.5	50
DSF9-5220X	M52 x 2	52	38 S	32	1.1/4”	20	95.6	6.5	104	60

SAE FLANGES

ORIGIN: NORTH AMERICA

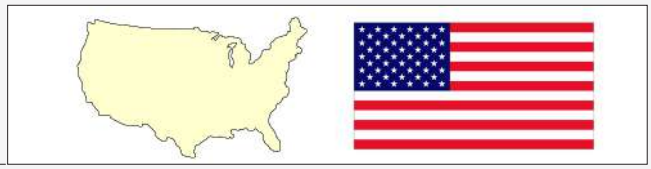

C611

3000 PSI CODE 61
STRAIGHT FLANGE

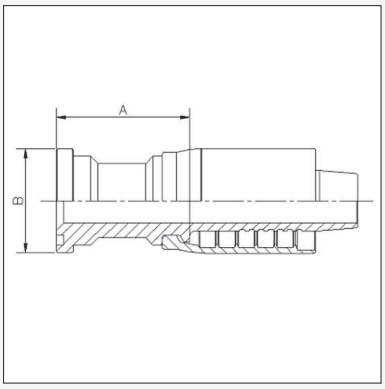

Product Code	Flange			Hose Bore			Dimensions (mm)			
	Bore	Size	ø ins.	DN	Inch	Size	A	øB		
C611-2020X	1.1/4”	20	2”	32	1.1/4”	20	51.4	50.8		
C611-2420X	1.1/4”	24	2.3/8”	32	1.1/4”	20	61.4	60.3		
C611-2424X	1.1/2”	24	2.3/8”	38	1.1/2”	24	62	60.3		
C611-3224X	1.1/2”	32	2.13/16”	38	1.1/2”	24	77	71.4		
C611-3232X	2”	32	2.13/16”	50	2”	32	95.7	71.4		

C614

3000 PSI CODE 61
45° ELBOW FLANGE

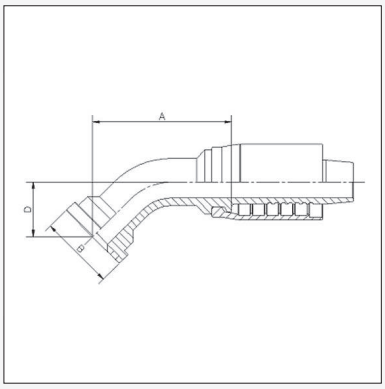

Product Code	Flange			Hose Bore			Dimensions (mm)			
	Bore	Size	ø ins.	DN	Inch	Size	A	øB	D	
C614-1620X	1.1/4”	20	2”	25	1”	16	130	50.8	43.5	
C614-2020X	1.1/4”	20	2”	32	1.1/4”	20	130	50.8	43.5	
C614-2420X	1.1/2”	24	2.3/8”	32	1.1/4”	20	126	60.3	38	
C614-2424X	1.1/2”	24	2.3/8”	38	1.1/2”	24	152	60.3	47	
C614-3224X	2”	32	2.13/16”	38	1.1/2”	24	137	71.4	47	
C614-3232X	2”	32	2.13/16”	50	2”	32	155	71.4	53	

C619

3000 PSI CODE 61
90° ELBOW FLANGE

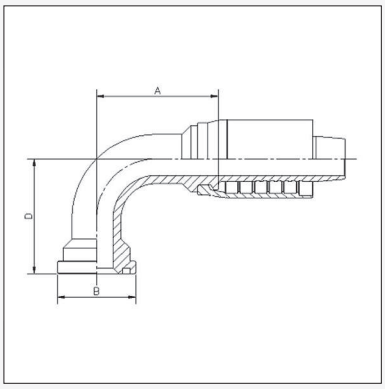

Product Code	Flange			Hose Bore			Dimensions (mm)			
	Bore	Size	ø ins.	DN	Inch	Size	A	øB	D	
C619-2020X	1.1/4”	20	2”	32	1.1/4”	20	87	50.8	69	
C619-2420X	1.1/2”	24	2.3/8”	32	1.1/4”	20	108	60.3	90	
C619-2424X	1.1/2”	24	2.3/8”	38	1.1/2”	24	132	60.3	103.5	
C619-3224X	2”	32	2.13/16”	38	1.1/2”	24	116	71.4	104	
C619-3232X	2”	32	2.13/16”	50	2”	32	155	71.4	123	

This page is part of a complete catalogue containing technical and safety data.
All data must be reviewed when selecting a product.
Pirtek reserve the right to change technical specifications without notice

SAE FLANGES
ORIGIN: NORTH AMERICA

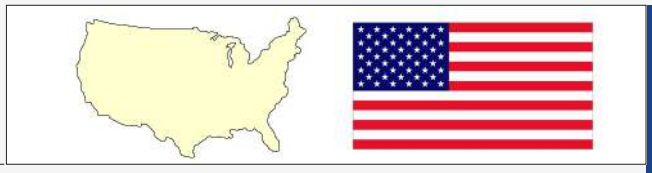

C621
6000 PSI CODE 62
STRAIGHT FLANGE

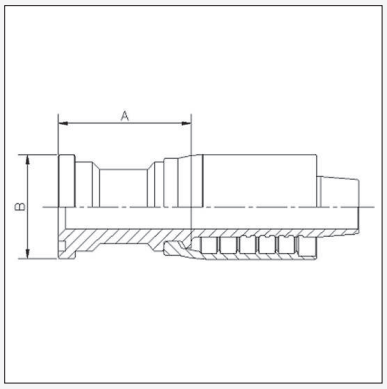

Product Code	Flange			Hose Bore			Dimensions (mm)			
	Bore	Size	ø ins.	DN	Inch	Size	A	øB		
C621-1212X	3/4”	12	1.5/8”	20	3/4”	12	55.6	41.3		
C621-1612X	1”	16	1.7/8”	20	3/4”	12	66.1	47.6		
C621-1616X	1”	16	1.7/8”	25	1”	16	66.3	47.6		
C621-2016X	1.1/4”	20	2.1/8”	25	1”	16	75.8	54		
C621-1620X	1”	16	1.7/8”	32	1.1/4”	20	68	47.6		
C621-2020X	1.1/4”	20	2.1/8”	32	1.1/4”	20	76.9	54		
C621-2420X	1.1/2”	24	2.1/2”	32	1.1/4”	20	81.4	63.5		
C621-2424X	1.1/2”	24	2.1/2”	38	1.1/2”	24	82	63.5		
C621-3224X	2”	32	3.1/8”	38	1.1/2”	24	110.5	79.4		
C621-3232X	2”	32	3.1/8”	50	2”	32	115.7	79.4		
C621-3232XL *	2”	32	3.1/8”	50	2”	32	127	79.4		

* XL Series incorporates an extra long ferrule for extreme applications

C621C
6000 PSI SUPERCAT
STRAIGHT SUPERCAT FLANGE

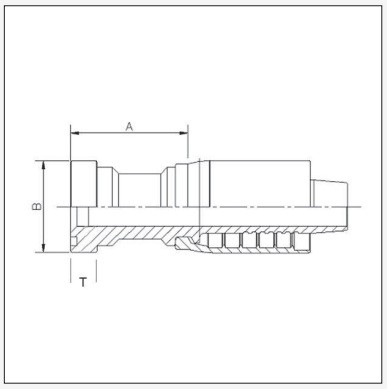

Product Code	Flange			Hose Bore			Dimensions (mm)			
	Bore	Size	ø ins.	DN	Inch	Size	A	øB	T	
C621C-1212X	3/4”	12	1.5/8”	20	3/4”	12	61.4	41.3	14.2	
C621C-1612X	1”	16	1.7/8”	20	3/4”	12	71.1	47.6	14.2	
C621C-1616X	1”	16	1.7/8”	25	1”	16	71.3	47.6	14.2	
C621C-2016X	1.1/4”	20	2.1/8”	25	1”	16	80	54	14.2	
C621C-2020X	1.1/4”	20	2.1/8”	32	1.1/4”	20	76	54	14.2	
C621C-2420X	1.1/2”	24	2.1/2”	32	1.1/4”	20	82.4	63.5	14.2	
C621C-2424X	1.1/2”	24	2.1/2”	38	1.1/2”	24	84	63.5	14.2	
C621C-3224X	2”	32	3.1/8”	38	1.1/2”	24	110.5	79.4	14.2	
C621C-3232X	2”	32	3.1/8”	50	2”	32	115.7	79.4	14.2	

C622C
6000 PSI SUPERCAT
22½° ELBOW SUPERCAT FLANGE

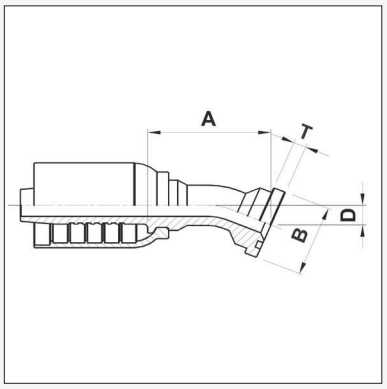

Product Code	Flange			Hose Bore			Dimensions (mm)			
	Bore	Size	ø ins.	DN	Inch	Size	A	øB	T	D
C622C-2020X	1.1/4”	20	2.1/8”	32	1.1/4”	20	131.5	54	14.2	21
C622C-2420X	1.1/2”	24	2.1/2”	32	1.1/4”	20	133	63.5	14.2	22.5

This page is part of a complete catalogue containing technical and safety data.
All data must be reviewed when selecting a product.
Pirtek reserve the right to change technical specifications without notice

SAE FLANGES

ORIGIN: NORTH AMERICA

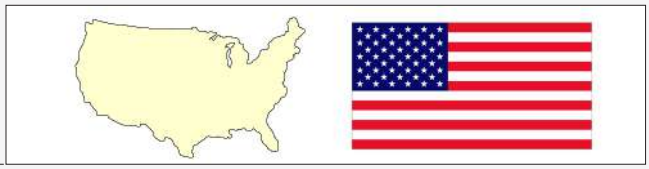

C623C

6000 PSI SUPERCAT
30° ELBOW SUPERCAT FLANGE

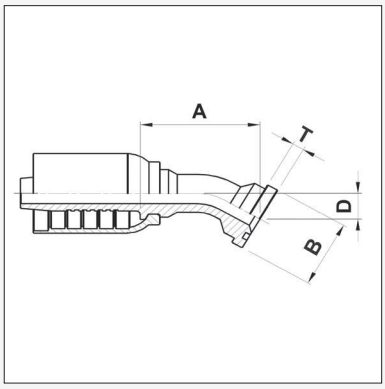

Product Code	Flange			Hose Bore			Dimensions (mm)			
	Bore	Size	ø ins.	DN	Inch	Size	A	øB	T	D
C623C-2020X	1.1/4”	20	2.1/8”	32	1.1/4”	20	128.5	54	14.2	29
C623C-2420X	1.1/2”	24	2.1/2”	32	1.1/4”	20	129.5	63.5	14.2	31
C623C-2424X	1.1/2”	24	2.1/2”	38	1.1/2”	24	147	63.5	14.2	29.5

C624

6000 PSI CODE 62
45° ELBOW FLANGE

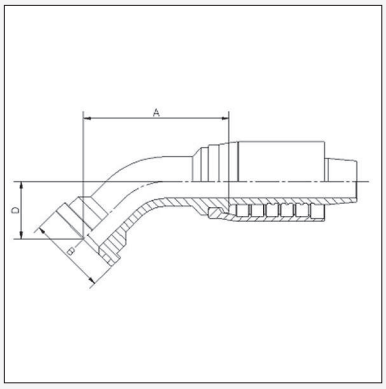

Product Code	Flange			Hose Bore			Dimensions (mm)			
	Bore	Size	ø ins.	DN	Inch	Size	A	øB	D	
C624-1212X	3/4”	12	1.5/8”	20	3/4”	12	78.8	41.3	29.5	
C624-1612X	1”	16	1.7/8”	20	3/4”	12	79.5	47.6	34.6	
C624-1616X	1”	16	1.7/8”	25	1”	16	84.3	47.6	31	
C624-2016X	1.1/4”	20	2.1/8”	25	1”	16	95.8	54	39	
C624-1620X	1”	16	1.7/8”	32	1.1/4”	20	115.5	47.6	43.5	
C624-2020X	1.1/4”	20	2.1/8”	32	1.1/4”	20	115.5	54	43.5	
C624-2420X	1.1/2”	24	2.1/2”	32	1.1/4”	20	117.5	63.5	48	
C624-2424X	1.1/2”	24	2.1/2”	38	1.1/2”	24	152	63.5	47	
C624-3224X	2”	32	3.1/8”	38	1.1/2”	24	167	79.4	57	
C624-3232X	2”	32	3.1/8”	50	2”	32	174	79.4	61	
C624-3232XL *	2”	32	3.1/8”	50	2”	32	170.7	79.4	71	

* XL Series incorporates an extra long ferrule for extreme applications

This page is part of a complete catalogue containing technical and safety data.
All data must be reviewed when selecting a product.
Pirtek reserve the right to change technical specifications without notice

SAE FLANGES
ORIGIN: NORTH AMERICA

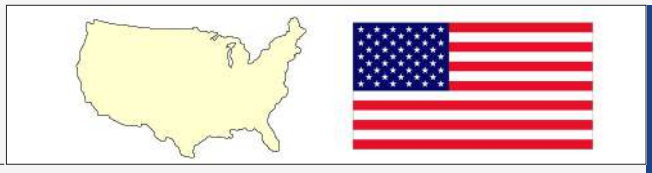

C624C
6000 PSI SUPERCAT
45° ELBOW SUPERCAT FLANGE

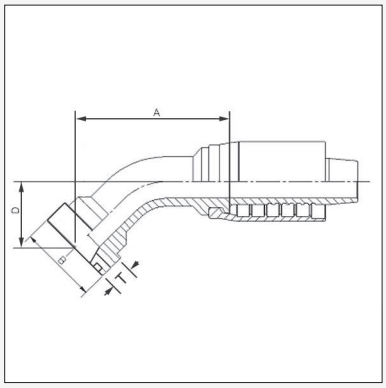

Product Code	Flange			Hose Bore			Dimensions (mm)			
	Bore	Size	ø ins.	DN	Inch	Size	A	øB	D	T
C624C-1212X	3/4”	12	1.5/8”	20	3/4”	12	81.4	41.3	33.5	14.2
C624C-1612X	1”	16	1.7/8”	20	3/4”	12	82.3	47.6	37.5	14.2
C624C-1616X	1”	16	1.7/8”	25	1”	16	87.8	47.6	34.5	14.2
C624C-1620X	1”	16	1.7/8”	32	1.1/4”	20	98.8	47.6	42	14.2
C624C-2016X	1.1/4”	20	2.1/8”	25	1”	16	118.5	54	46.5	14.2
C624C-2020X	1.1/4”	20	2.1/8”	32	1.1/4”	20	118.5	54	46.5	14.2
C624C-2420X	1.1/2”	24	2.1/2”	32	1.1/4”	20	118.5	63.5	46.5	14.2
C624C-2424X	1.1/2”	24	2.1/2”	38	1.1/2”	24	153.5	63.5	48.5	14.2
C624C-3232X	2”	32	3.1/8”	50	2”	32	182.5	79.4	61.5	14.2

C626
6000 PSI CODE 62
60° ELBOW FLANGE

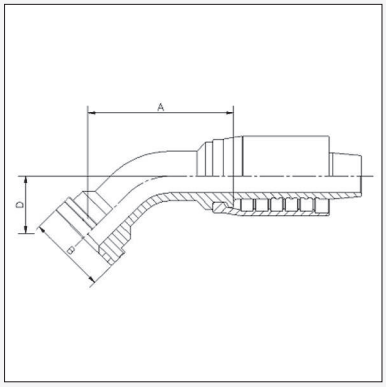

Product Code	Flange			Hose Bore			Dimensions (mm)			
	Bore	Size	ø ins.	DN	Inch	Size	A	øB	D	
C626-1616X	1”	16	1.7/8”	25	1”	16	107.8	47.6	47	
C626-2016X	1.1/4”	20	2.1/8”	25	1”	16	107.8	54	47	
C626-2020X	1.1/4”	20	2.1/8”	32	1.1/4”	20	113	54	55	
C626-2420X	1.1/2”	24	2.1/2”	32	1.1/4”	20	113	63.5	55	
C626-2424X	1.1/2”	24	2.1/2”	38	1.1/2”	24	175.5	63.5	69.5	
C626-3224X	2”	32	3.1/8”	38	1.1/2”	24	195.5	79.4	69.5	
C626-3232X	2”	32	3.1/8”	50	2”	32	215.5	79.4	90	

C626C
6000 PSI SUPERCAT
60° ELBOW SUPERCAT FLANGE

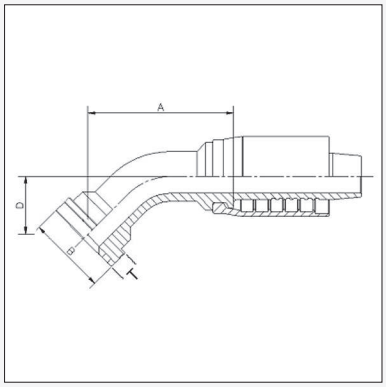

Product Code	Flange			Hose Bore			Dimensions (mm)			
	Bore	Size	ø ins.	DN	Inch	Size	A	øB	D	T
C626C-2020X	1.1/4”	20	2.1/8”	32	1.1/4”	20	132	54	59	14.2
C626C-2420X	1.1/2”	24	2.1/2”	32	1.1/4”	20	137	63.5	65.5	14.2
C626C-2424X	1.1/2”	24	2.1/2”	38	1.1/2”	24	153.5	63.5	71.5	14.2

This page is part of a complete catalogue containing technical and safety data.
All data must be reviewed when selecting a product.
Pirtek reserve the right to change technical specifications without notice

SAE FLANGES

ORIGIN: NORTH AMERICA

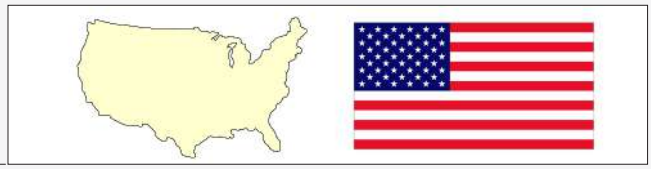

C627C

6000 PSI CODE 62
67° ELBOW SUPERCAT FLANGE

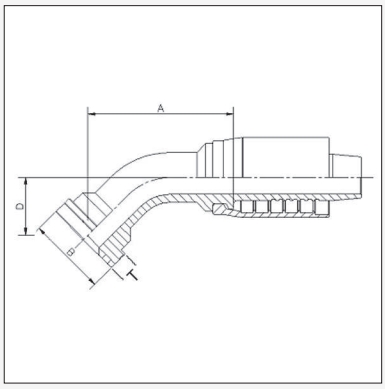

Product Code	Flange			Hose Bore			Dimensions (mm)			
	Bore	Size	ø ins.	DN	Inch	Size	A	øB	D	T
C627C-2020X	1.1/4”	20	2.1/8”	32	1.1/4”	20		54		14.2
C627C-2420X	1.1/2”	24	2.1/2”	32	1.1/4”	20		63.5		14.2

C629 / C629L

6000 PSI CODE 62
STANDARD AND LONG DROP 90° ELBOW FLANGE

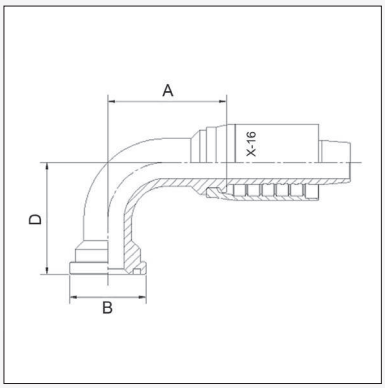

Product Code	Flange			Hose Bore			Dimensions (mm)			
	Bore	Size	ø ins.	DN	Inch	Size	A	øB	D	
C629-1212X	3/4”	12	1.5/8”	20	3/4”	12	68.8	41.3	60.5	
C629-1612X	1”	16	1.7/8”	20	3/4”	12	66.8	47.6	65	
C629-1616X	1”	16	1.7/8”	25	1”	16	80.8	47.6	66	
C629-2016X	1.1/4”	20	2.1/8”	25	1”	16	84.8	54	80	
C629-1620X	1”	16	1.7/8”	32	1.1/4”	20	109.5	47.6	87	
C629-2020X	1.1/4”	20	2.1/8”	32	1.1/4”	20	104	54	86	
C629-2420X	1.1/2”	24	2.1/2”	32	1.1/4”	20	104.2	63.5	98	
C629-2424X	1.1/2”	24	2.1/2”	38	1.1/2”	24	129	63.5	107	
C629-3224X	2”	32	3.1/8”	38	1.1/2”	24	129	79.4	119.5	
C629-3232X	2”	32	3.1/8”	50	2”	32	162	79.4	134	
C629-3232XL *	2”	32	3.1/8”	50	2”	32	156.7	79.4	138	
LONG DROP ELBOWS										
C629L-1616X-130	1”	16	1.7/8”	25	1”	16	86.5	47.6	130	
C629L-2020X-130	1.1/4”	20	2.1/8”	32	1.1/4”	20	104	54	130	

* XL Series incorporates an extra long ferrule for extreme applications

PIRTEK

This page is part of a complete catalogue containing technical and safety data.
All data must be reviewed when selecting a product.
Pirtek reserve the right to change technical specifications without notice Rev 4.2

SAE FLANGES
ORIGIN: NORTH AMERICA

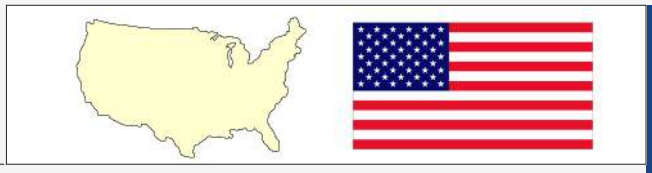

C629C
6000 PSI SUPERCAT
90° ELBOW SUPERCAT FLANGE

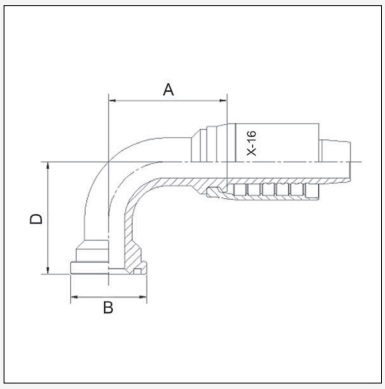

Product Code	Flange			Hose Bore			Dimensions (mm)			
	Bore	Size	ø ins.	DN	Inch	Size	A	øB	D	T
C629C-1212X	3/4”	12	1.5/8”	20	3/4”	12	68.8	41.3	66.3	14.2
C629C-1612X	1”	16	1.7/8”	20	3/4”	12	66	47.6	70	14.2
C629C-1616X	1”	16	1.7/8”	25	1”	16	76.8	47.6	71	14.2
C629C-2016X	1.1/4”	20	2.1/8”	25	1”	16	84.8	54	84.2	14.2
C629C-2020X	1.1/4”	20	2.1/8”	32	1.1/4”	20	104	54	90.2	14.2
C629C-2420X	1.1/2”	24	2.1/2”	32	1.1/4”	20	104	63.5	90.2	14.2
C629C-2424X	1.1/2”	24	2.1/2”	38	1.1/2”	24	129	63.5	109	14.2
C629C-3232X	2”	32	3.1/8”	50	2”	32	162	79.4	136	14.2

JAPANESE FITTINGS
ORIGIN: JAPAN

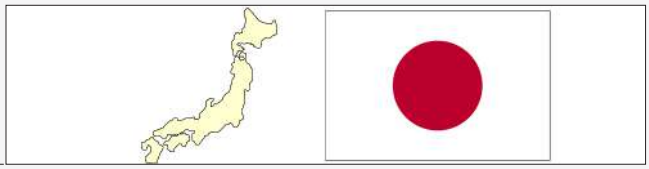

KC611
KOMATSU STANDARD PRESSURE (210 BAR)
STRAIGHT FLANGE

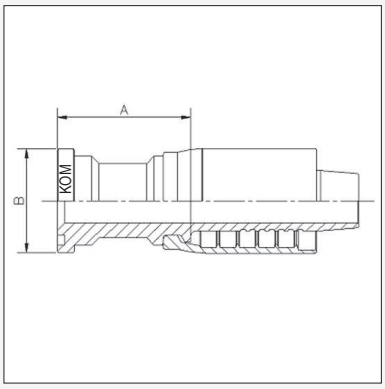

Product Code	Flange			Hose Bore			Dimensions (mm)			
	Bore	Size	ø ins.	DN	Inch	Size	A	øB		
KC611-2020X	1.1/4”	20	2”	32	1.1/4”	20	82.9	50.8		
KC611-2424X	1.1/2”	24	2.3/8”	38	1.1/2”	24	93.5	60.3		
KC611-3232X	2”	32	2.13/16”	50	2”	32	128.7	71.4		

KOM identifier can vary between flange head and stem. Flange heads incorporate metric O-Ring dimensions
See page 28

KC614
KOMATSU STANDARD PRESSURE (210 BAR)
45° ELBOW FLANGE

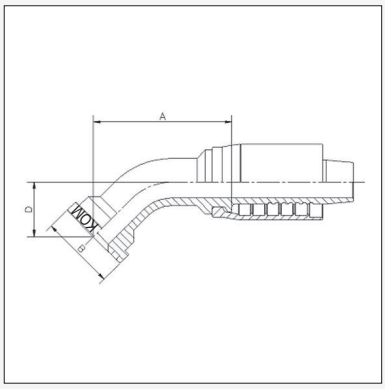

Product Code	Flange			Hose Bore			Dimensions (mm)			
	Bore	Size	ø ins.	DN	Inch	Size	A	øB	D	
KC614-2020X	1.1/4”	20	2”	32	1.1/4”	20	115.9	50.8	32	
KC614-2424X	1.1/2”	24	2.3/8”	38	1.1/2”	24	131.5	60.3	38	
KC614-3232X	2”	32	2.13/16”	50	2”	32	188.2	71.4	54	

KOM identifier can vary between flange head and stem. Flange heads incorporate metric O-Ring dimensions
See page 28

KC619
KOMATSU STANDARD PRESSURE (210 BAR)
90° ELBOW FLANGE

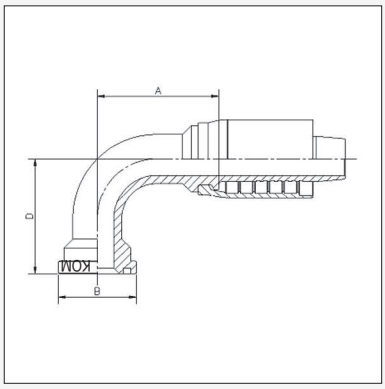

Product Code	Flange			Hose Bore			Dimensions (mm)			
	Bore	Size	ø ins.	DN	Inch	Size	A	øB	D	
KC619-2020X	1.1/4”	20	2”	32	1.1/4”	20	102.9	50.8	80	
KC619-2424X	1.1/2”	24	2.3/8”	38	1.1/2”	24	132	60.3	110	
KC619-3232X	2”	32	2.13/16”	50	2”	32	164.7	71.4	140	

KOM identifier can vary between flange head and stem. Flange heads incorporate metric O-Ring dimensions
See page 28

This page is part of a complete catalogue containing technical and safety data.
All data must be reviewed when selecting a product.
Pirtek reserve the right to change technical specifications without notice

BSP FITTINGS
ORIGIN: GREAT BRITAIN

BF1
BSPP FEMALE STRAIGHT

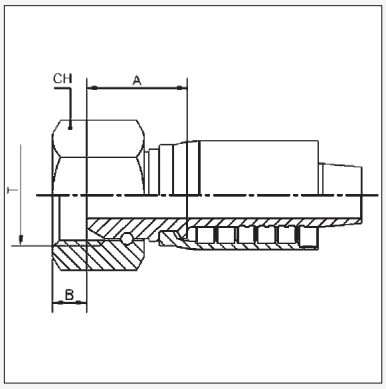

Product Code	BSPP Thread		Nominal ID			Dimensions mm			
	T	Size	Dash	Inch	DN	A	B	CH	
BF1-2020H	1.1/4" - 11	20	32	1.1/4"	20	37.8	10	50	
BF1-2424H	1.1/2" - 11	24	38	1.1/2"	24	38.3	12	55	
BF1-3232H	2" - 11	32	50	2"	32	40.6	16	70	

BF4
BSPP FEMALE 45° ELBOW

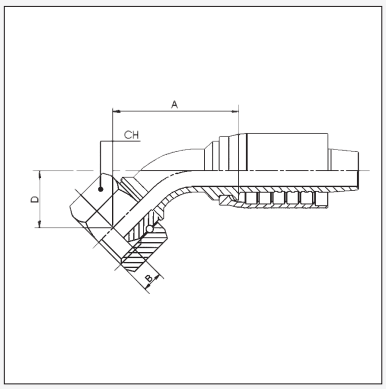

Product Code	BSPP Thread		Nominal ID			Dimensions mm			
	T	Size	Dash	Inch	DN	A	B	CH	D
BF4-2020H	1.1/4" - 11	20	32	1.1/4"	20	106.4	10	50	37.7
BF4-2424H	1.1/2" - 11	24	38	1.1/2"	24	162	12	55	51
BF4-3232H	2" - 11	32	50	2"	32	197	16	70	65.5

BSP FITTINGS

ORIGIN: GREAT BRITAIN

BF9

BSPP FEMALE 90° ELBOW

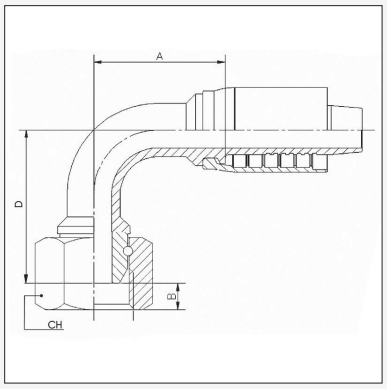

Product Code	BSPP Thread		Nominal ID			Dimensions mm			
	T	Size	Dash	Inch	DN	A	B	CH	D
BF9-2020H	1.1/4" - 11	20	32	1.1/4"	20	91.5	10	50	83
BF9-2424H	1.1/2" - 11	24	38	1.1/2"	24	132	12	55	108
BF9-3232H	2" - 11	32	50	2"	32	157	16	70	140

BTM1

BSPT MALE STRAIGHT

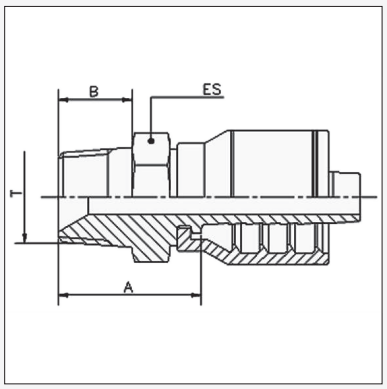

Product Code	BSPT Thread		Nominal ID			Dimensions mm			
	T	Size	Dash	Inch	DN	A	B	ES	
BTM1-2020H	1.1/4" - 11	20	32	1.1/4"	20	52.9	25	46	
BTM1-2424H	1.1/2" - 11	24	38	1.1/2"	24	53.5	25	50	
BTM1-3232H	2" - 11	32	50	2"	32	63.7	28	65	

This page is part of a complete catalogue containing technical and safety data.
All data must be reviewed when selecting a product.
Pirtek reserve the right to change technical specifications without notice

NPT FITTINGS
ORIGIN: NORTH AMERICA

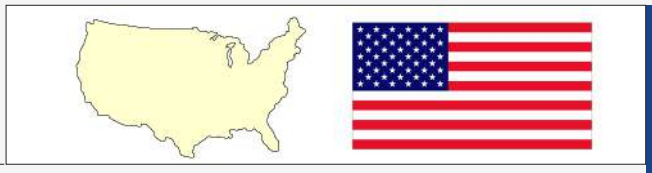

NM1
NPT MALE STRAIGHT

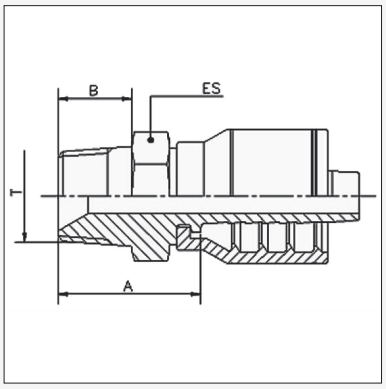

Product Code	NPT Thread		Nominal ID			Dimensions mm			
	T	Size	Dash	Inch	DN	A	B	ES	
NM1-2020H	1.1/4" - 11½	20	32	1.1/4"	20	62.9	24.5	46	
NM1-2424H	1.1/2" - 11½	24	38	1.1/2"	24	61.5	25.5	50	
NM1-3232H	2" - 11½	32	50	2"	32	79.7	26	65	

* Stainless Steel Version add SS to the part number, Eg NM1SS-2020H

NM1
NPT MALE STRAIGHT

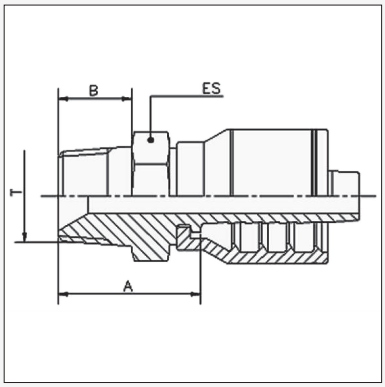

Product Code	NPT Thread		Nominal ID			Dimensions mm			
	T	Size	Dash	Inch	DN	A	B	ES	
NM1-2020H	1.1/4" - 11½	20	32	1.1/4"	20	62.9	24.5	46	
NM1-2424H	1.1/2" - 11½	24	38	1.1/2"	24	61.5	25.5	50	
NM1-3232H	2" - 11½	32	50	2"	32	79.7	26	65	

* Stainless Steel Version add SS to the part number, Eg NM1SS-2020H

HJ9
HOSE JOINER 90º
CRIMP STYLE

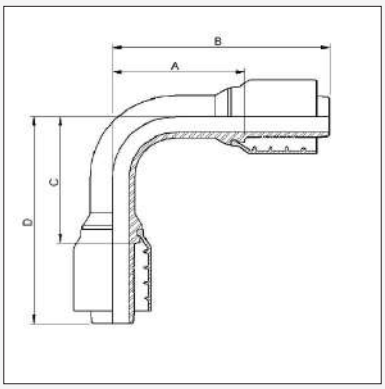

"Product Code"	Hose Bore			Dimensions mm			
	DN	Inch	Size	A	B	C	D
HJ9-2020H	31	1.1/4"	20	100.5	166.5	100.5	166.5

JIC FITTINGS

ORIGIN: NORTH AMERICA

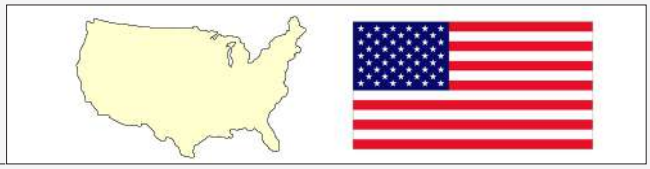

JF1

JIC FEMALE STRAIGHT

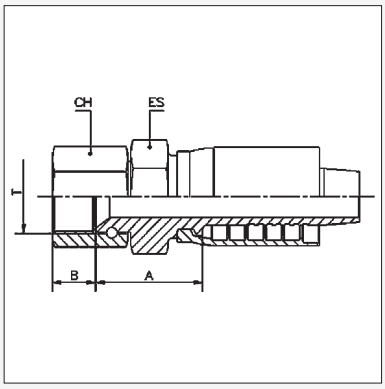

Product Code	JIC Thread			Hose Bore			Dimensions (mm)			
	Thread	Size	Tube	DN	Inch	Size	A	B	CH	ES
JF1-2620H †	1.5/8" - 12	26	20	32	1.1/4"	20	51.5	16	50	41
JF1-3024H †	1.7/8" - 12	30	24	38	1.1/2"	24	54.4	18.5	55	50
JF1-4032H †	2.1/2" - 12	40	32	50	2"	32	77.7	24	75	65

† Thrust wired nut

* Stainless Steel Version add SS to the part number, Eg JF1SS-2620H

JF4

JIC FEMALE 45° ELBOW

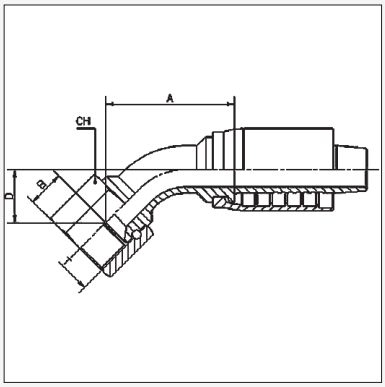

Product Code	JIC Thread			Hose Bore			Dimensions (mm)			
	Thread	Size	Tube	DN	Inch	Size	A	B	D	CH
JF4-2620H †	1.5/8" - 12	26	20	32	1.1/4"	20	99.4	16	36.3	50
JF4-3024H †	1.7/8" - 12	30	24	38	1.1/2"	24	162.5	18.5	50	55

† Thrust wired nut

This page is part of a complete catalogue containing technical and safety data.
All data must be reviewed when selecting a product.
Pirtek reserve the right to change technical specifications without notice

JIC FITTINGS
ORIGIN: NORTH AMERICA

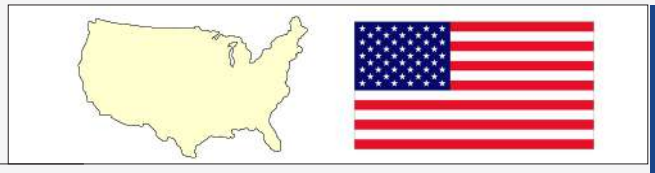

JF9
JIC FEMALE 90° ELBOW

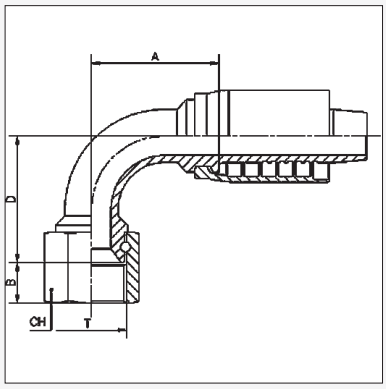

Product Code	JIC Thread			Hose Bore			Dimensions (mm)			
	Thread	Size	Tube	DN	Inch	Size	A	B	D	CH
JF9-2620H †	1.5/8" - 12	26	20	32	1.1/4"	20	84.4	16	77	50
JF9-3024H †	1.7/8" - 12	30	24	38	1.1/2"	24	128.5	18.5	105	55
JF9-4032H †	2½" - 12	40	32	50	2"	32	157	24	140	75

† Thrust wired nut

JM1
JIC MALE STRAIGHT

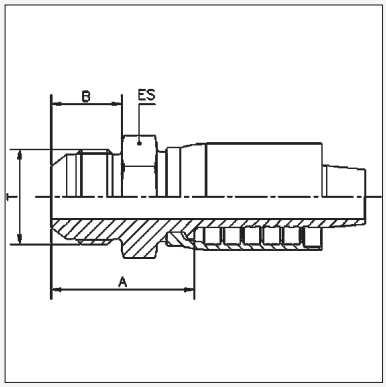

Product Code	JIC Thread			Hose Bore			Dimensions (mm)			
	Thread	Size	Tube	DN	Inch	Size	A	B	ES	
JM1-2620H	1.5/8" - 12	26	20	32	1.1/4"	20	62.7	24.3	46	
JM1-3024H	1.7/8" - 12	30	24	38	1.1/2"	24	63.5	27.5	50	
JM1-4032H	2½" - 12	40	32	50	2"	32	87.6	33.9	65	

ORFS FITTINGS

ORIGIN: NORTH AMERICA

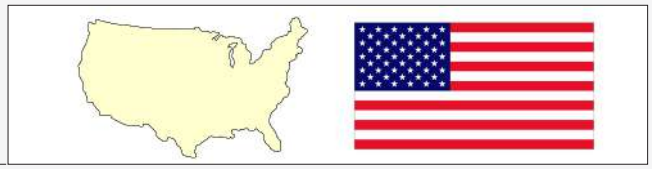

OF1

O-RING FACE SEAL FEMALE STRAIGHT

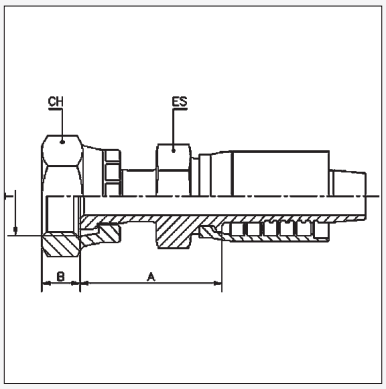

Product Code	UN Thread			Hose Bore			Dimensions (mm)			
	Thread	Size	Tube	DN	Inch	Size	A	B	CH	ES
OF1-2020H	1.11/16" - 12	20	20	32	1.1/4"	20	55.9	14.8	50	41
OF1-2424H	2" -12	24	24	38	1.1/2"	24	58.7	14.8	60	50

OF4

O-RING FACE SEAL FEMALE 45° ELBOW

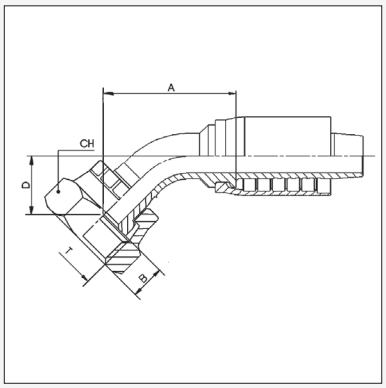

Product Code	UN Thread			Hose Bore			Dimensions (mm)			
	Thread	Size	Tube	DN	Inch	Size	A	B	CH	D
OF4-2020H	1.11/16" - 12	20	20	32	1.1/4"	20	99.4	14.8	50	36.3

OF9

O-RING FACE SEAL FEMALE 90° ELBOW

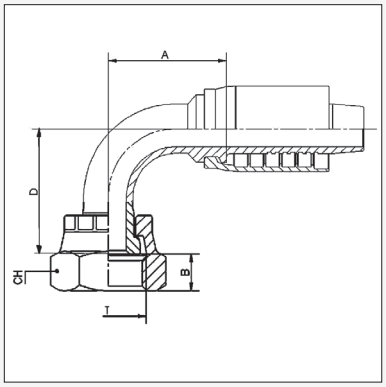

Product Code	UN Thread			Hose Bore			Dimensions (mm)			
	Thread	Size	Tube	DN	Inch	Size	A	B	CH	D
OF9-2020H	1.11/16" - 12	20	20	32	1.1/4"	20	84.4	14.8	50	77
OF9-2424H	2" - 12	24	24	38	1.1/2"	24	115	14.8	60	102

This page is part of a complete catalogue containing technical and safety data.
All data must be reviewed when selecting a product.
Pirtek reserve the right to change technical specifications without notice

METRIC FITTINGS
ORIGIN: GERMANY

DSF1
DKS (HEAVY) METRIC FEMALE STRAIGHT

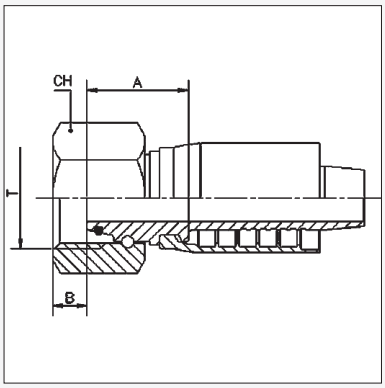

Product Code	Metric Thread			Hose Bore			Dimensions (mm)			
	Thread	Size	Tube	DN	Inch	Size	A	B	CH	
DSF1-5220H	M52 x 2	52	38 S	32	1.1/4"	20	48.9	6.5	60	
DSF1-5224H	M52 x 2	52	38 S	38	1.1/2"	24	43	6.5	60	

* Stainless Steel Version add SS to the part number, Eg DSF1SS-5220H

DSM1
DKS (HEAVY) METRIC MALE STRAIGHT

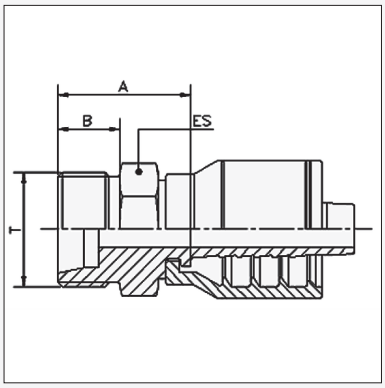

Product Code	Metric Thread			Hose Bore			Dimensions (mm)			
	Thread	Size	Tube	DN	Inch	Size	A	B	ES	
DSM1-5220H	M52 x 2	52	38 S	32	1.1/4"	20	49.9	22	55	

METRIC FITTINGS
ORIGIN: GERMANY

DSF4
DKS (HEAVY) METRIC FEMALE
45° ELBOW

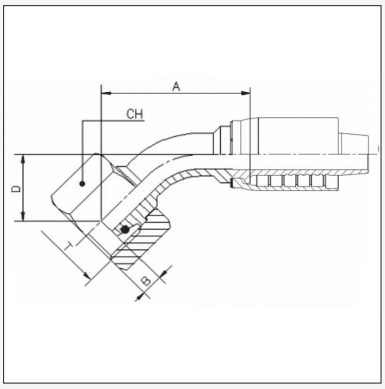

Product Code	Metric Thread			Hose Bore			Dimensions (mm)			
	Thread	Size	Tube	DN	Inch	Size	A	B	D	CH
DSF4-5220H	M52 x 2	52	38 S	32	1.1/4"	20	123.3	6.5	45.6	60

DSF9
DKS (HEAVY) METRIC FEMALE
90° ELBOW

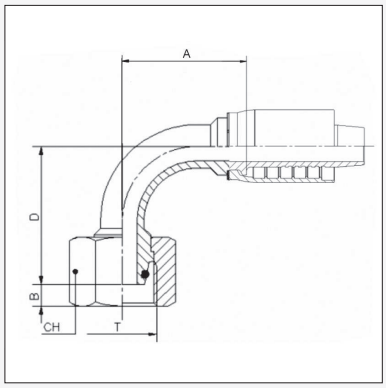

Product Code	Metric Thread			Hose Bore			Dimensions (mm)			
	Thread	Size	Tube	DN	Inch	Size	A	B	D	CH
DSF9-5220H	M52 x 2	52	38 S	32	1.1/4"	20	95.6	6.5	104	60

This page is part of a complete catalogue containing technical and safety data.
All data must be reviewed when selecting a product.
Pirtek reserve the right to change technical specifications without notice

SAE FLANGES
ORIGIN: NORTH AMERICA

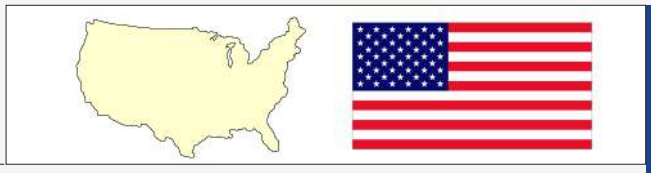

C611
3000 PSI CODE 61
STRAIGHT FLANGE

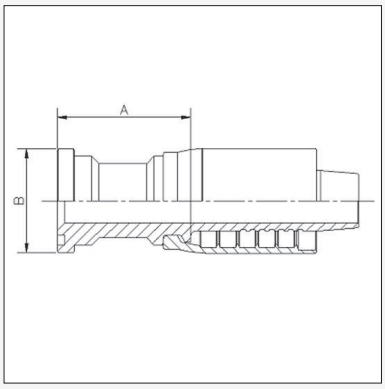

Product Code	Flange			Hose Bore			Dimensions (mm)			
	Bore	Size	ø ins.	DN	Inch	Size	A	øB		
C611-2020H	1.1/4”	20	2”	32	1.1/4”	20	51.4	50.8		
C611-2420H	1.1/2”	24	2.3/8”	32	1.1/4”	20	61.4	60.3		
C611-2424H	1.1/2”	24	2.3/8”	38	1.1/2”	24	62	60.3		
C611-3224H	2”	32	2.13/16”	38	1.1/2”	24	77	71.4		
C611-3232H	2”	32	2.13/16”	50	2”	32	95.7	71.4		

C612 / 613
3000 PSI CODE 61
22º & 30º ELBOW FLANGE

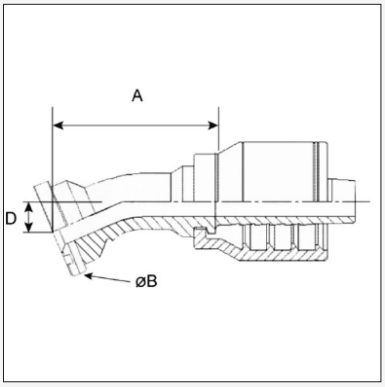

Product Code	Flange			Hose Bore			Dimensions (mm)		
	Bore	Size	ø ins.	DN	Inch	Size	A	øB	D
22º ELBOW FLANGE									
C612-2424H	1.1/2"	24	2.3/8"	38	1.1/2"	24	140	60.3	20.1
33º ELBOW FLANGE									
C613-2424H	1.1/2"	24	2.3/8"	38	1.1/2"	24	147.5	60.3	28.4

C614
3000 PSI CODE 61
45° ELBOW FLANGE

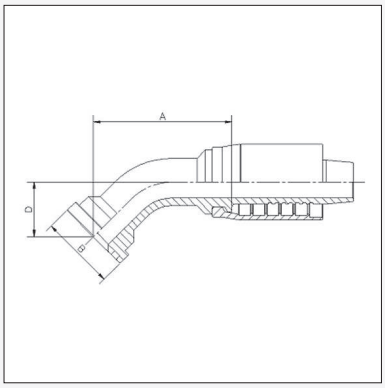

Product Code	Flange			Hose Bore			Dimensions (mm)			
	Bore	Size	ø ins.	DN	Inch	Size	A	øB	D	
C614-1620H	1”	16	1.3/4”	32	1.1/4"	20	115.5	44.5	43.5	
C614-2020H	1.1/4”	20	2”	32	1.1/4”	20	89	50.8	31.1	
C614-2420H	1.1/2”	24	2.3/8”	32	1.1/4”	20	91.8	60.3	31	
C614-2424H	1.1/2”	24	2.3/8”	38	1.1/2”	24	152	60.3	47	
C614-3224H	2”	32	2.13/16”	38	1.1/2”	24	133	71.4	47	
C614-3232H	2”	32	2.13/16”	50	2”	32	150	71.4	53	

SAE FLANGES

ORIGIN: NORTH AMERICA

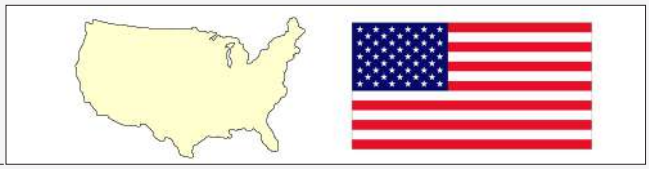

C619

3000 PSI CODE 61
90° ELBOW FLANGE

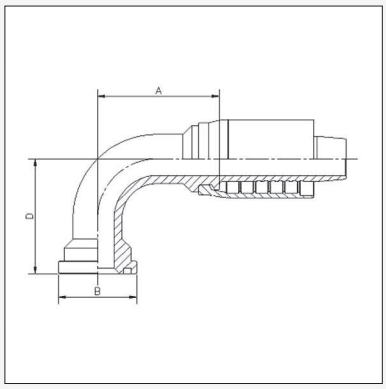

Product Code	Flange			Hose Bore			Dimensions (mm)			
	Bore	Size	ø ins.	DN	Inch	Size	A	øB	D	
C619-2020H	1.1/4”	20	2”	32	1.1/4”	20	87	50.8	69	
C619-2020H-090	1.1/4"	20	2"	32	1.1/4"	20	99	50.8	90	
C619-2420H	1.1/2”	24	2.3/8”	32	1.1/4”	20	108	60.3	90	
C619-2424H	1.1/2”	24	2.3/8”	38	1.1/2”	24	132	60.3	103.5	
C619-3224H	2”	32	2.13/16”	38	1.1/2”	24	116	71.4	104	
C619-3232H	2”	32	2.13/16”	50	2”	32	155	71.4	123	

C621

6000 PSI CODE 62
STRAIGHT FLANGE

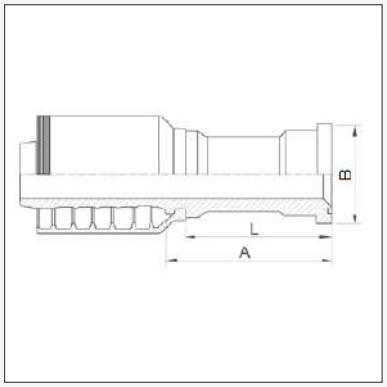

Product Code	Flange			Hose Bore			Dimensions (mm)			
	Bore	Size	ø ins.	DN	Inch	Size	A	øB	L	
C621-1620H	1”	16	1.7/8”	32	1.1/4”	20	68	47.6	57	
C621-2020H	1.1/4”	20	2.1/8”	32	1.1/4”	20	72	54	62	
C621-2024H	1.1/4”	20	2.1/8”	38	1.1/2”	24	72.5	54	59	
C621-2420H	1.1/2”	24	2.1/2”	32	1.1/4”	20	81.4	63.5	71.5	
C621-2424H	1.1/2”	24	2.1/2”	38	1.1/2”	24	82	63.5	68.5	
C621-3224H	2”	32	3.1/8”	38	1.1/2”	24	110.5	79.4	100	
C621-3232H	2”	32	3.1/8”	50	2”	32	115.7	79.4	95	
C621-3232HLZ-110	2"	32	3.1/8"	50	2"	32	135	79.4	110	

*Stainless Steel Version add SS to the part number Eg C621SS-2020H

C621C/C621CD

6000 PSI SUPERCAT (C) SUPER 'D' RING (CD)*
STRAIGHT SUPERCAT FLANGE

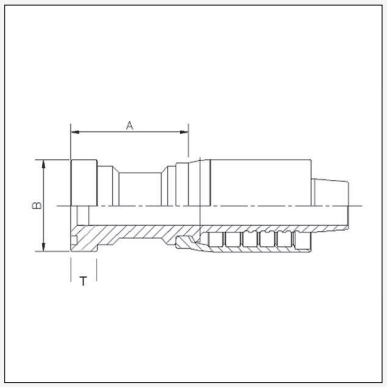

Product Code	Flange			Hose Bore			Dimensions (mm)			
	Bore	Size	ø ins.	DN	Inch	Size	A	øB	T	
C621C-2020H	1.1/4”	20	2.1/8”	32	1.1/4”	20	76	54	14.2	
C621CD-2020H	1.1/4”	20	2.1/8”	32	1.1/4”	20	76	54	14.2	
C621C-2420H	1.1/2”	24	2.1/2”	32	1.1/4”	20	82.4	63.5	14.2	
C621CD-2420H	1.1/2”	24	2.1/2”	32	1.1/4”	20	82.4	63.5	14.2	
C621C-2424H	1.1/2”	24	2.1/2”	38	1.1/2”	24	84	63.5	14.2	
C621CD-2424H	1.1/2”	24	2.1/2”	38	1.1/2”	24	84	63.5	14.2	
C621C-3224H	2”	32	3.1/8”	38	1.1/2”	24	110.5	79.4	14.2	
C621CD-3224H	2”	32	3.1/8”	38	1.1/2”	24	110.5	79.4	14.2	
C621C-3232H	2”	32	3.1/8”	50	2”	32	115.7	79.4	14.2	
C621CD-3232H	2”	32	3.1/8”	50	2”	32	115.7	79.4	14.2	

CD*TypeAccomodate'D'profileO-RingPirtekPartYD

This page is part of a complete catalogue containing technical and safety data.
All data must be reviewed when selecting a product.
Pirtek reserve the right to change technical specifications without notice

SAE FLANGES

ORIGIN: NORTH AMERICA

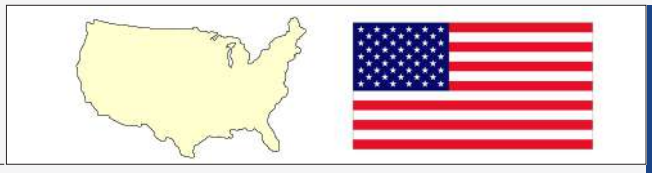

C622/C622C/C622CD

6000 PSI CODE 62 / SUPERCAT (C) / SUPERCAT 'D' RING (CD)
22.5° ELBOW FLANGES

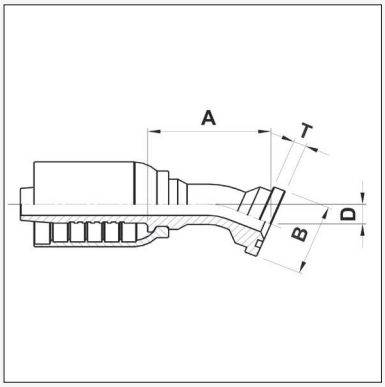

Product Code	Flange			Hose Bore			Dimensions (mm)			
	Bore	Size	ø ins.	DN	Inch	Size	A	øB	T	D
C622-2020H-019	1.1/4"	20	2.1/8"	32	1.1/4"	20	127.5	54	10.3	19.3
C622C-2020H	1.1/4"	20	2.1/8"	32	1.1/4"	20	131.5	54	14.2	21
C622CD-2020H	1.1/4"	20	2.1/8"	32	1.1/4"	20	131.5	54	14.2	21
C622C-2420H	1.1/2"	24	2.1/2"	32	1.1/4"	20	133	63.5	14.2	22.5
C622CD-2420H	1.1/2"	24	2.1/2"	32	1.1/4"	20	133	63.5	14.2	22.5

CD*TypeAccomodate'D'profileO-RingPirtekPartYD

C623 / C623C / C623CD

6000 PSI CODE 62 / SUPERCAT (C) / SUPERCAT 'D' RING (CD)
30° ELBOW FLANGE

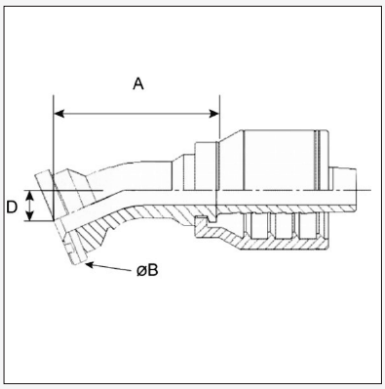

Product Code	Flange			Hose Bore			Dimensions (mm)		
	Bore	Size	ø ins.	DN	Inch	Size	A	B	D
C623-2020H	1.1/4"	20	2.1/8"	32	1.1/4"	20	124.5	54	27
C623C-2020H	1.1/4"	20	2.1/8"	32	1.1/4"	20	128.5	54	29
C623CD-2020H	1.1/4"	20	2.1/8"	32	1.1/4"	20	128.5	54	29
C623C-2420H	1.1/2"	24	2.1/2"	32	1.1/4"	20	129.5	63.5	31
C623CD-2420H	1.1/2"	24	2.1/2"	32	1.1/4"	20	129.5	63.5	31
C623C-2424H	1.1/2"	24	2.1/2"	38	1.1/2"	24	147	63.5	29.5
C623CD-2424H	1.1/2"	24	2.1/2"	38	1.1/2"	24	147	63.5	29.5
C623-3232HLZ-046	2"	32	3.1/8"	50	2"	32	200	79.4	46

CD*TypeAccomodate'D'profileO-RingPirtekPartYD

C624

6000 PSI CODE 62
45° ELBOW FLANGE

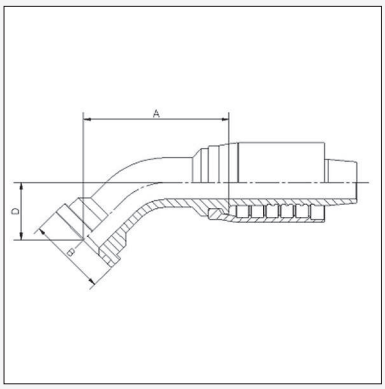

Product Code	Flange			Hose Bore			Dimensions (mm)			
	Bore	Size	ø ins.	DN	Inch	Size	A	øB	D	
C624-1620H	1"	16	1.7/8"	32	1.1/4"	20	115.5	47.6	43.5	
C624-2020H	1.1/4"	20	2.1/8"	32	1.1/4"	20	115.5	54	43.5	
C624-2420H	1.1/2"	24	2.1/2"	32	1.1/4"	20	117.5	63.5	48	
C624-2424H	1.1/2"	24	2.1/2"	38	1.1/2"	24	152	63.5	47	
C624-3224H	2"	32	3.1/8"	38	1.1/2"	24	167	79.4	57	
C624-3232H	2"	32	3.1/8"	50	2"	32	174	79.4	61	
C624-3232HLZ-061	2"	32	3.1/8"	50	2"	32	176.5	79.4	61	

SAE FLANGES

ORIGIN: NORTH AMERICA

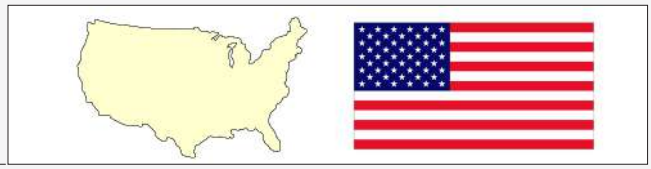

C624C / C624CD

6000 PSI SUPERCAT (C) / SUPERCAT 'D' RING (CD)
45° ELBOW SUPERCAT FLANGE

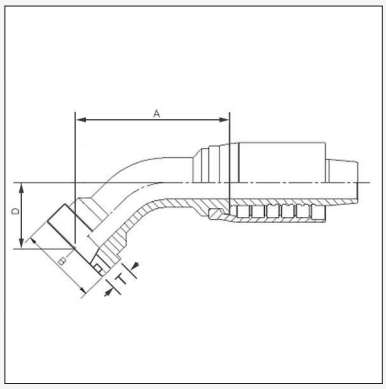

Product Code	Flange			Hose Bore			Dimensions (mm)			
	Bore	Size	ø ins.	DN	Inch	Size	A	øB	D	T
C624C-2020H	1.1/4”	20	2.1/8”	32	1.1/4”	20	118.5	54	46.5	14.2
C624CD-2020H	1.1/4”	20	2.1/8”	32	1.1/4”	20	118.5	54	46.5	14.2
C624C-2420H	1.1/2”	24	2.1/2”	32	1.1/4”	20	118.5	63.5	46.5	14.2
C624CD-2420H	1.1/2”	24	2.1/2”	32	1.1/4”	20	118.5	63.5	46.5	14.2
C624C-2424H	1.1/2”	24	2.1/2”	38	1.1/2”	24	153.5	63.5	48.5	14.2
C624CD-2424H	1.1/2”	24	2.1/2”	38	1.1/2”	24	153.5	63.5	48.5	14.2
C624C-3232H	2”	32	3.1/8”	50	2”	32	182.5	79.4	61.5	14.2
C624CD-3232H	2”	32	3.1/8”	50	2”	32	182.5	79.4	61.5	14.2

CD*TypeAccomodate'D'profileO-RingPirtekPartYD

C626

6000 PSI CODE 62
60° ELBOW FLANGE

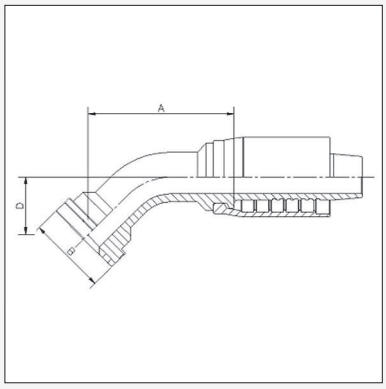

Product Code	Flange			Hose Bore			Dimensions (mm)			
	Bore	Size	ø ins.	DN	Inch	Size	A	øB	D	
C626-2020H	1.1/4”	20	2.1/8”	32	1.1/4”	20	113	54	55	
C626-2424H	1.1/2”	24	2.1/2”	38	1.1/2”	24	175.5	63.5	69.5	

C626C / C626CD

6000 PSI SUPERCAT (C) / SUPERCAT 'D' RING (CD)
60° ELBOW SUPERCAT FLANGE

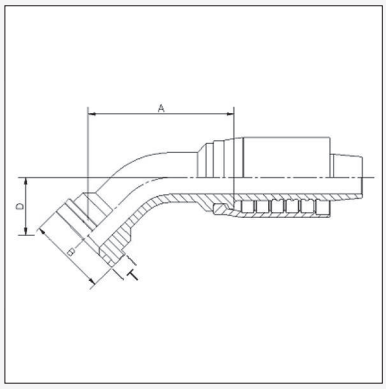

Product Code	Flange			Hose Bore			Dimensions (mm)			
	Bore	Size	ø ins.	DN	Inch	Size	A	øB	D	T
C626C-2020H	1.1/4”	20	2.1/8”	32	1.1/4”	20	132	54	59	14.2
C626CD-2020H	1.1/4”	20	2.1/8”	32	1.1/4”	20	132	54	59	14.2
C626C-2420H	1.1/2”	24	2.1/2”	32	1.1/4”	20	137	63.5	65.5	14.2
C626CD-2420H	1.1/2”	24	2.1/2”	32	1.1/4”	20	137	63.5	65.5	14.2
C626C-2424H	1.1/2”	24	2.1/2”	38	1.1/2”	24	153.5	63.5	71.5	14.2
C626CD-2424H	1.1/2”	24	2.1/2”	38	1.1/2”	24	153.5	63.5	71.5	14.2

CD*TypeAccomodate'D'profileO-RingPirtekPartYD

This page is part of a complete catalogue containing technical and safety data.
All data must be reviewed when selecting a product.
Pirtek reserve the right to change technical specifications without notice

SAE FLANGES

ORIGIN: NORTH AMERICA

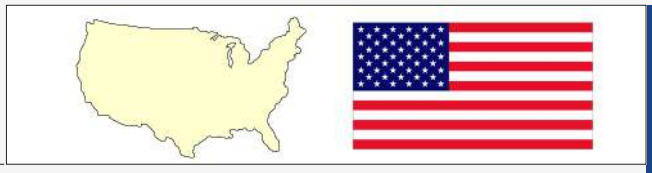

C627/C627C/ C627CD

6000 PSI CODE 62 / SUPERCAT (C) / SUPERCAT 'D' RING (CD)

67.5° ELBOW FLANGE

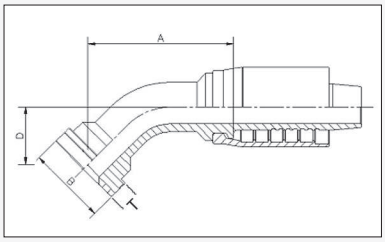

Product Code	Flange			Hose Bore			Dimensions (mm)			
	Bore	Size	ø ins.	DN	Inch	Size	A	øB	D	T
C627-2020H-067	1.1/4"	20	2.1/8"	32	1.1/4"	20	115	54	67	10.3
C627C-2020H	1.1/4"	20	2.1/8"	32	1.1/4"	20	115	54	67	14.2
C627CD-2020H	1.1/4"	20	2.1/8"	32	1.1/4"	20	115	54	67	14.2
C627C-2420H	1.1/2"	24	2.1/2"	32	1.1/4"	20	128	63.5	76.1	14.2
C627CD-2420H	1.1/2"	24	2.1/2"	32	1.1/4"	20	128	63.5	76.1	14.2

CD* Type Accomodate 'D' profile O-Ring Pirtek Part YD

C629

6000 PSI CODE 62

90° ELBOW FLANGE

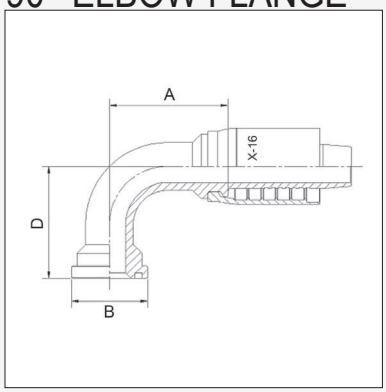

Product Code	Flange			Hose Bore			Dimensions (mm)			
	Bore	Size	ø ins.	DN	Inch	Size	A	øB	D	
C629-1620H	1"	16	1.7/8"	32	1.1/4"	20	109.5	47.6	87	
C629-2020H	1.1/4"	20	2.1/8"	32	1.1/4"	20	104	54	86	
C629-2020H-130	1.1/4"	20	2.1/8"	32	1.1/4"	20	104	54	130	
C629-2020H-170	1.1/4"	20	2.1/8"	32	1.1/4"	20	104	54	170	
C629-2420H	1.1/2"	24	2.1/2"	32	1.1/4"	20	104.2	63.5	98	
C629-2424H	1.1/2"	24	2.1/2"	38	1.1/2"	24	129	63.5	107	
C629-2424H-195	1.1/2"	24	2.1/2"	38	1.1/2"	24	124	63.5	195	
C629-3224H	2"	32	3.1/8"	38	1.1/2"	24	129	79.4	119.5	
C629-3232H	2"	32	3.1/8"	50	2"	32	162	79.4	134	
C629-3232HLZ-155	2"	32	3.1/8"	50	2"	32	171	79.4	155	

* Stainless Steel Version add SS to the part number Eg C629SS-2020H

C629C / C629CD

6000 PSI SUPERCAT (C) / SUPERCAT 'D' RING (CD)

90° ELBOW SUPERCAT FLANGE

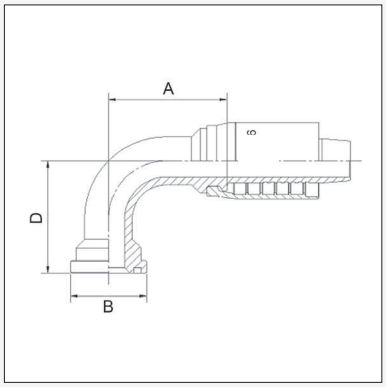

Product Code	Flange			Hose Bore			Dimensions (mm)			
	Bore	Size	ø ins.	DN	Inch	Size	A	øB	D	T
C629C-2020H	1.1/4"	20	2.1/8"	32	1.1/4"	20	104	54	90.2	14.2
C629CD-2020H	1.1/4"	20	2.1/8"	32	1.1/4"	20	104	54	90.2	14.2
C629C-2020H-150	1.1/4"	20	2"	31	1.1/4"	20	104	54	150	14,5
C629CD-2020H-150	1.1/4"	20	2"	31	1.1/4"	20	104	54	150	14,5
C629C-2420H	1.1/2"	24	2.1/2"	32	1.1/4"	20	104	63.5	90.2	14.2
C629CD-2420H	1.1/2"	24	2.1/2"	32	1.1/4"	20	104	63.5	90.2	14.2
C629C-2420H-135	1.1/2"	24	2.3/8"	31	1.1/4"	20	104,2	63,5	135	14,5
C629CD-2420H-135	1.1/2"	24	2.3/8"	31	1.1/4"	20	104,2	63,5	135	14,5
C629C-2424H	1.1/2"	24	2.1/2"	38	1.1/2"	24	129	63.5	109	14.2
C629CD-2424H	1.1/2"	24	2.1/2"	38	1.1/2"	24	129	63.5	109	14.2
C629C-3232H	2"	32	3.1/8"	50	2"	32	162	79.4	136	14.2
C629CD-3232H	2"	32	3.1/8"	50	2"	32	162	79.4	136	14.2

CD* Type Accomodate 'D' profile O-Ring Pirtek Part YD

SAE FLANGES

ORIGIN: NORTH AMERICA

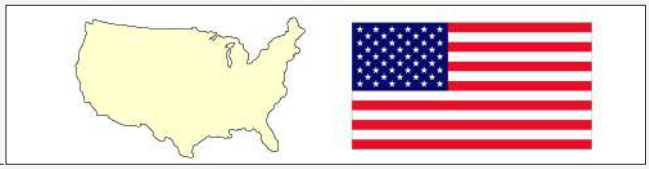

C6213

6000 PSI CODE 62
130º ELBOW FLANGE

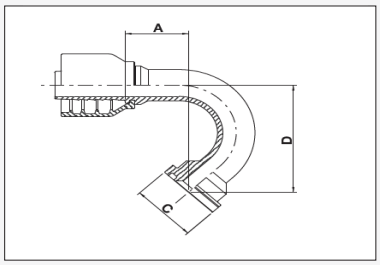

Product Code	Flange			Hose Bore			Dimensions (mm)		
	Bore	Size	Ø ins	DN	Inch	Size	A	C	D
C6213-1620H-093	1"	16	1.7/8"	32	1.1/4"	20	84	47.6	93

This page is part of a complete catalogue containing technical and safety data.
All data must be reviewed when selecting a product.
Pirtek reserve the right to change technical specifications without notice

SAE FLANGES
ORIGIN: NORTH AMERICA

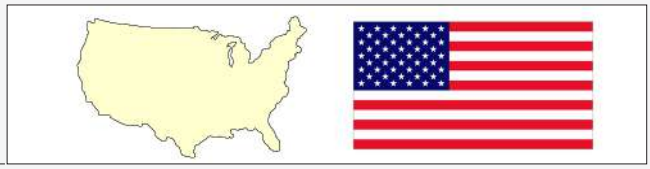

C621TF
6000 PSI CODE 62 TAPERED STRAIGHT FLANGE

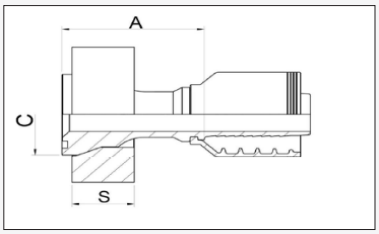

"Product Code"	Flange			Hose Bore		Dimensions (mm)		
	Bore	Size	DN	Inch	Size	A	C	S
C621TF-2020H	1.1/4"	20	32	1.1/4"	20	93	54	35
C621TF-2424H	1.1/2"	24	38	1.1/2"	24	114	63.5	41.6
C621TF-3224H	2"	32	38	1.1/2"	24	130.5	79.4	49
C621TF-3232HLZ	2"	32	50	2"	32	134.8	79.4	49

C624TF
6000 PSI CODE 62 TAPERED 45º FLANGE

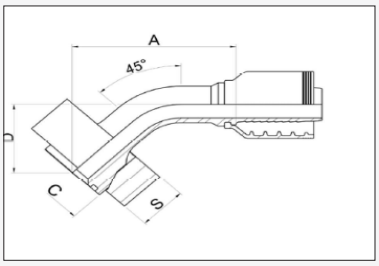

"Product Code"	Flange			Hose Bore		Dimensions (mm)			
	Bore	Size	DN	Inch	Size	A	D	C	S
C624TF-2020H-060	1.1/4"	20	32	1.1/4"	20	127	60	54	35
C624TF-2424H-080	1.1/2"	24	38	1.1/2"	24	166	80	63.5	41.6
C624TF-3224H-095	2"	32	38	1.1/2"	24	184	95	79.4	49
C624TF-3232HLZ-090	2"	32	50	2"	32	195.4	90	79.4	49

C627TF
6000 PSI CODE 62 TAPERED 70º FLANGE

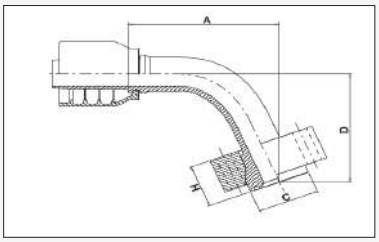

"Product Code"	Flange			Hose Bore		Dimensions (mm)			
	Bore	Size	DN	Inch	Size	A	D	C	S
C627TF-2020H	1.1/4"	20	32	1.1/4"	20	137	97.8	54	43

C629TF
6000 PSI CODE 62 TAPERED 90º FLANGE

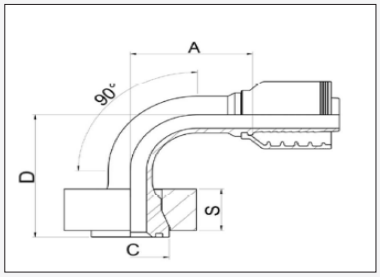

"Product Code"	Flange		Hose Bore			Dimensions (mm)			
	Bore	Size	DN	Inch	Size	A	D	C	S
C629TF-2020H-120	1.1/4"	20	32	1.1/4"	20	98	120	54	35
C629TF-2424H-140	1.1/2"	24	38	1.1/2"	24	122.5	140	63.5	41.6
C629TF-3224H-160	2"	32	38	1.1/2"	24	131	160	79.4	49
C629TF-2432HLZ-140	1.1/2"	24	50	2"	32	135	140	63.5	41.6
C629TF-3232HLZ-180	2"	32	50	2"	32	160.5	180	79.4	49

AK-HLZ
ANTI-KINK HOSE GUARD SUIT HLZ FITTINGS

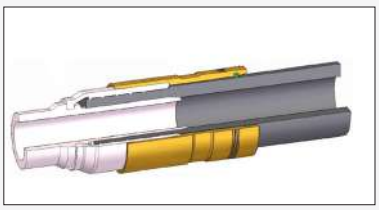

Product Code	Description
AK-HLZ-32	Anti-kink hose guard to suit HLZ fittings Length = 145mm
AK-OR-HLZ-32	Replacement o-ring for AK-HLZ-32 NBR 70

PIRTEK

This page is part of a complete catalogue containing technical and safety data.
All data must be reviewed when selecting a product.
Pirtek reserve the right to change technical specifications without notice

This page is intentionally left blank

This page is part of a complete catalogue containing technical and safety data.
All data must be reviewed when selecting a product.
Pirtek reserve the right to change technical specifications without notice

JAPANESE FITTINGS
ORIGIN: JAPAN

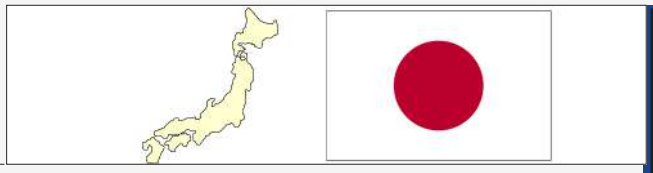

KC611
KOMATSU STANDARD PRESSURE (210 BAR)
STRAIGHT FLANGE

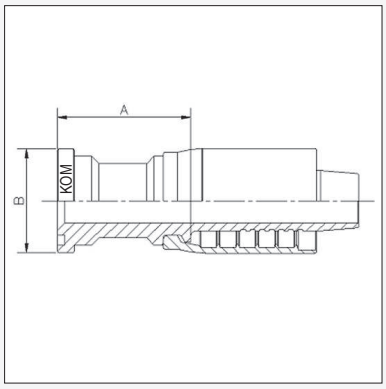

Product Code	Flange			Hose Bore			Dimensions (mm)			
	Bore	Size	ø ins.	DN	Inch	Size	A	øB		
KC611-2020H	1.1/4”	20	2”	32	1.1/4”	20	82.9	50.8		
KC611-2424H	1.1/2”	24	2.3/8”	38	1.1/2”	24	93.5	60.3		
KC611-3232H	2”	32	2.13/16”	50	2”	32	128.7	71.4		

KOM identifier can vary between flange head and stem. Flange heads incorporate metric O-Ring dimensions
See page 28

KC614
KOMATSU STANDARD PRESSURE (210 BAR)
45° ELBOW FLANGE

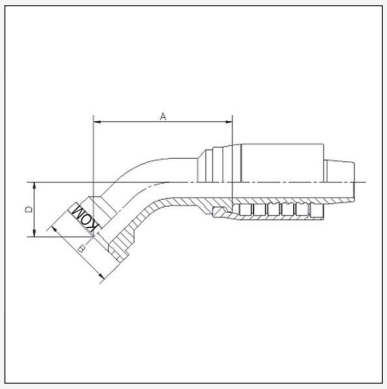

Product Code	Flange			Hose Bore			Dimensions (mm)			
	Bore	Size	ø ins.	DN	Inch	Size	A	øB	D	
KC614-2020H	1.1/4”	20	2”	32	1.1/4”	20	89.0	50.8	31	
KC614-2424H	1.1/2”	24	2.3/8”	38	1.1/2”	24	131.5	60.3	37	
KC614-3232H	2”	32	2.13/16”	50	2”	32	188.2	71.4	52.5	

KOM identifier can vary between flange head and stem. Flange heads incorporate metric O-Ring dimensions
See page 28

KC619
KOMATSU STANDARD PRESSURE (210 BAR)
90° ELBOW FLANGE

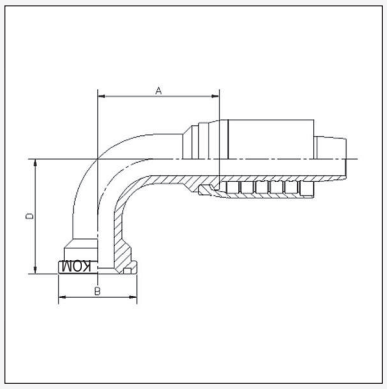

Product Code	Flange			Hose Bore			Dimensions (mm)			
	Bore	Size	ø ins.	DN	Inch	Size	A	øB	D	
KC619-2020H	1.1/4”	20	2”	32	1.1/4”	20	102.9	50.8	80	
KC619-2424H	1.1/2”	24	2.3/8”	38	1.1/2”	24	132	60.3	110	
KC619-3232H	2”	32	2.13/16”	50	2”	32	164.7	71.4	140	

KOM identifier can vary between flange head and stem. Flange heads incorporate metric O-Ring dimensions
See page 28

LeTourneau ®

ORIGIN: USA

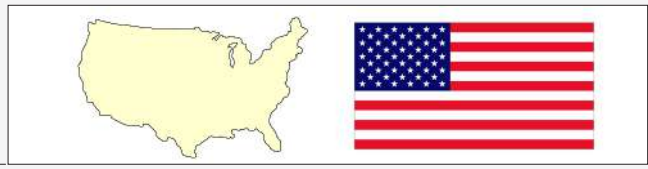

*Note AZLT Split Clamps To Be Used In Conjunction With These Fittings. Refer To Catalogue Section

C6LT1

LETOURNEAU STRAIGHT FLANGE (5000 PSI)

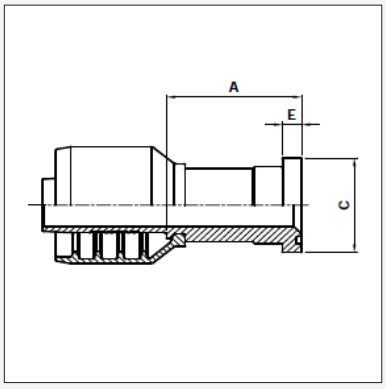

Product Code	Hose Bore			Dimensions (mm)			
	DN	Inch	Size	Flange	A	C	E
C6LT1-2424H	38	1.1/2"	24	1.1/2"	73	60.35	11

C6LT4

LETOURNEAU 45° FLANGE (5000 PSI)

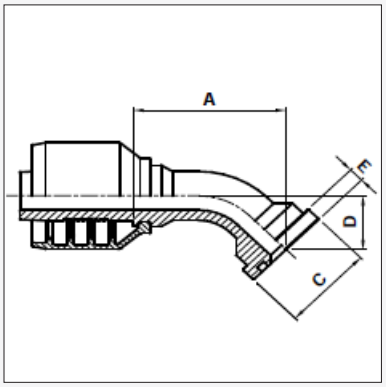

Product Code	Hose Bore			Dimensions (mm)				
	DN	Inch	Size	Flange	A	C	D	E
C6LT4-2424H-046	38	1.1/2"	24	1.1/2"	154	60.35	49	11

C6LT9

LETOURNEAU 90° FLANGE (5000 PSI)

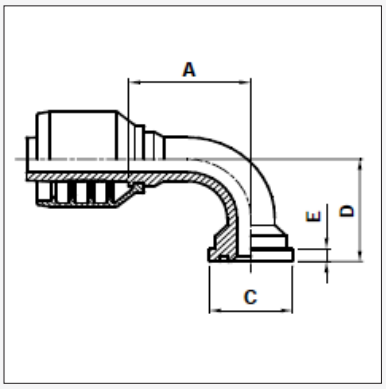

Product Code	Hose Bore			Dimensions (mm)				
	DN	Inch	Size	Flange	A	C	D	E
C6LT9-2424H-104	38	1.1/2"	24	1.1/2"	132	60.35	104	11

PIRTEK

This page is part of a complete catalogue containing technical and safety data.
All data must be reviewed when selecting a product.
Pirtek reserve the right to change technical specifications without notice

SAE FLANGES

ORIGIN: NORTH AMERICA

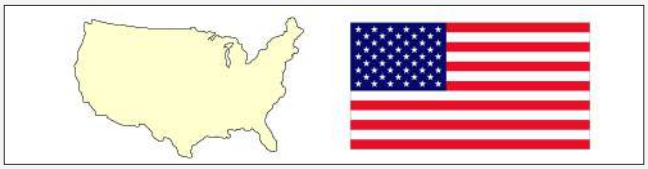

SF

FERRULE

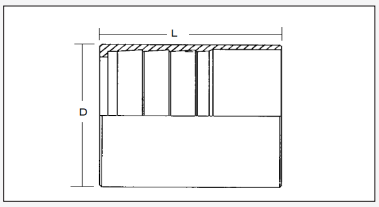

Product Code	Hose Bore			Dimensions (mm)		
	DN	Inch	Size	Max. hose O.D	L	D
SF-48-092	76	3"	48	92	106	103.1
SFHD-076-098	76	3"	48	98	106	115
SF-56-108	90	3.1/2"	56	108	116	121
SF102-122	100	4"	64	122	101	135
SF-102-125	100	4"	64	125	101	138
SF-152-172	150	6"	96	172	143	187
SF-152-178	150	6"	96	178	141	193

C611

CODE 61 STRAIGHT FLANGE

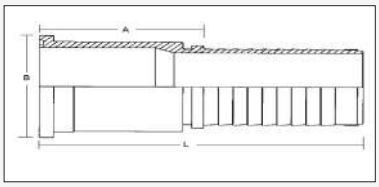

Product Code	Flange		Hose Bore			Dimensions (mm)		
	Bore	Size	DN	Inch	Size	A	B	L
C611-4848SF	3"	48	76	3"	48	111.1	101.6	219.1
C611-5648SF	3.1/2"	56	76	3"	48	74.2	114.3	182.2
C611-5656SF	3.1/2"	56	90	3.1/2"	56	110.3	114.3	223
C611-6464SF	4"	64	102	4"	64	92.5	127	176

C612

CODE 61 22º FLANGE

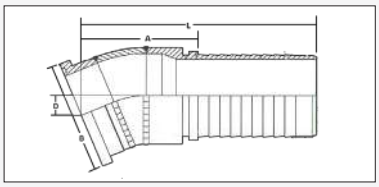

"Product Code"	Flange		Hose Bore			Dimensions (mm)			
	Bore	Size	DN	Inch	Size	A	B	D	L
C612-4848SF-018	3"	48	76	3"	48	105.7	101.6	18	213.6

C613

CODE 61 30º FLANGE

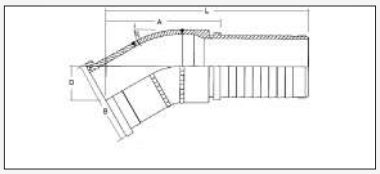

"Product Code"	Flange		Hose Bore			Dimensions (mm)			
	Bore	Size	DN	Inch	Size	A	B	D	L
C613-4848SF-042	3"	48	76	3"	48	141	101.6	42	248.5

C614

CODE 61 45º FLANGE

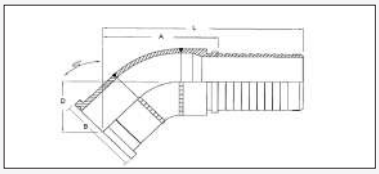

"Product Code"	Flange		Hose Bore			Dimensions (mm)			
	Bore	Size	DN	Inch	Size	A	B	D	L
C614-4848SF-068	3"	48	76	3"	48	146.1	101.6	67.5	254.1
C614-5656SF-070	3.1/2"	56	90	3.1/2"	56	146.8	114.3	70.3	258

SAE FLANGES

ORIGIN: NORTH AMERICA

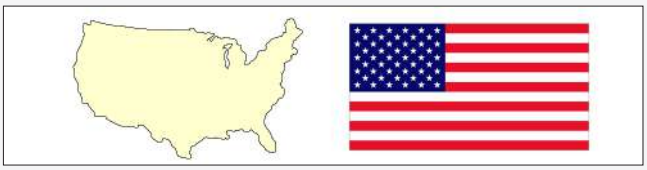

C616

CODE 61 60º FLANGE

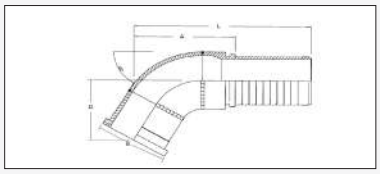

"Product Code"	Flange		Hose Bore			Dimensions (mm)			
	Bore	Size	DN	Inch	Size	A	B	D	L
C616-4848SF-093	3"	48	76	3"	48	144.9	101.6	93.4	252.9

C617

CODE 61 67.5º FLANGE

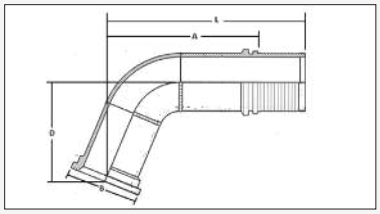

"Product Code"	Flange		Hose Bore			Dimensions (mm)			
	Bore	Size	DN	Inch	Size	A	B	D	L
C617-4848SF-095	3"	48	76	3"	48	137.2	101.6	95	245.2
C617-6464SF-175	4"	64	100	4"	64	266.1	127	175.3	349.6

C619

CODE 61 90º FLANGE

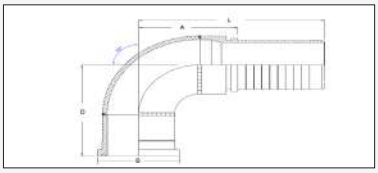

"Product Code"	Flange		Hose Bore			Dimensions (mm)			
	Bore	Size	DN	Inch	Size	A	B	D	L
C619-4848SF-140	3"	48	76	3"	48	123.1	101.6	140	231.1
C619-5648SF-162	3.1/2"	56	76	3"	48	123	114.3	162	231
C619-5656SF-143	3.1/2"	56	90	3.1/2"	56	120	114.3	143	232
C619-5656SF-155	3.1/2"	56	90	3.1/2"	56	120	114.3	155	232.2

NM1

NPT MALE STRAIGHT

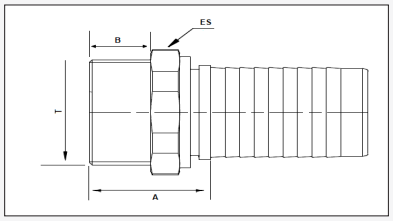

"Product Code"	NPT Thread		Nominal ID			Dimensions (mm)		
	T	Size	DN	Inch	Dash	A	B	ES
NM1-4848SF	3" - 8	48	75	3"	48	83	42	100

This page is part of a complete catalogue containing technical and safety data.
All data must be reviewed when selecting a product.
Pirtek reserve the right to change technical specifications without notice

BSP
ORIGIN: GREAT BRITAIN

BF1
BSPP FEMALE STRAIGHT

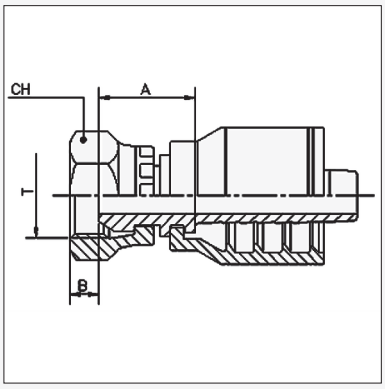

Product Code	BSPP Thread			Nominal ID			Dimensions mm		
	T	Size	Pipe	DN	Inch	Size	A	B	CH
BF1-0202T	1/8" - 28	02	1/8"	3	1/8"	02	14.3	5.5	14
BF1-0202TP	1/8" - 28	02	1/8"	3	1/8"	02	11	5.5	14
BF1-0402T	1/4" - 19	4	1/4"	3	1/8"	2	16.5	4.2	19
BF1-0402TP	1/4" - 19	4	1/4"	3	1/8"	02	18.5	4.2	19
BF1-0203T	1/8" - 28	02	1/8"	5	3/16"	03	14.3	5.5	14
BF1-0204T	1/8" - 28	02	1/8"	6	1/4"	04	21.5	5.5	14
BF1-0403T	1/4" - 19	04	1/4"	5	3/16"	03		4.2	19
BF1-0404T	1/4" - 19	04	1/4"	6	1/4"	04	17.5	4.2	19
BF1-0604T	3/8" - 19	06	3/8"	6	1/4"	04	18.5	6	22
BF1-0405T	1/4" - 19	04	1/4"	8	5/16"	05	17.8	4.2	19
BF1-0605T	3/8" - 19	06	3/8"	8	5/16"	05	18.5	6	22
BF1-0406T	1/4" - 19	04	1/4"	10	1/4"	06	17.8	4.2	19
BF1-0606T	3/8" - 19	06	3/8"	10	3/8"	06	18.5	6	22
BF1-0806T	1/2" - 14	08	1/2"	10	3/8"	06	20.5	6.5	27
BF1-0808T	1/2" - 14	08	1/2"	12	1/2"	08	21	6.5	27
BF1-1010T	5/8" - 14	10	5/8"	16	5/8"	10	18	9.5	27
BF1-1212T	3/4" - 14	12	3/4"	20	3/4"	12	22	8.7	32
BF1-1612T	1" - 11	16	1"	20	3/4"	12	27	10.5	38
BF1-1616T	1" - 11	16	1"	25	1"	16	28	10.5	38

BF4
BSPP FEMALE 45° ELBOW

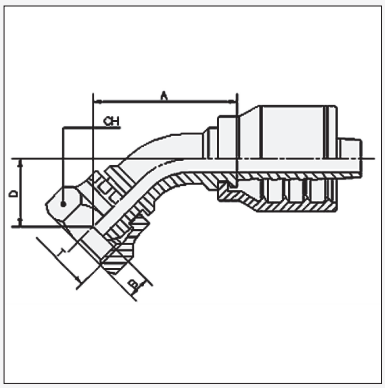

Product Code	BSPP Thread			Nominal ID			Dimensions mm			
	T	Size	Pipe	DN	Inch	Size	A	B	CH	D
BF4-0404T	1/4" - 19	04	1/4"	6	1/4"	04	31.5	4.2	19	13
BF4-0606T	3/8" - 19	06	3/8"	10	3/8"	06	39	6	22	15
BF4-0808T	1/2" - 14	08	1/2"	12	1/2"	08	46	6.5	27	18
BF4-1212T	3/4" - 14	12	3/4"	20	3/4"	12	70	8.7	32	28.3
BF4-1616T	1" - 11	16	1"	25	1"	16	83.5	10.5	38	32

BSP
ORIGIN: GREAT BRITAIN

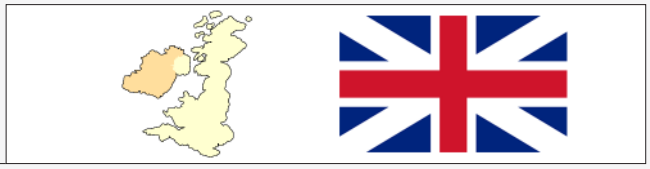

BF9
BSPP FEMALE 90° ELBOW

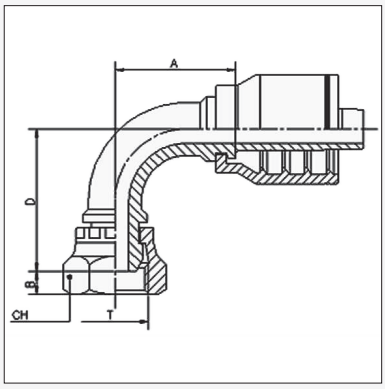

Product Code	BSPP Thread			Nominal ID			Dimensions mm			
	T	Size	Pipe	DN	Inch	Size	A	B	CH	D
BF9-0404T	1/4" - 19	04	1/4"	6	1/4"	04	27.5	4.2	19	27
BF9-0604T	3/8" - 19	06	1/4"	6	1/4"	04	27.5	6	22	29.5
BF9-0606T	3/8" - 19	06	3/8"	10	3/8"	06	32.5	6	22	30
BF9-0806T	1/2" - 14	08	3/8"	10	3/8"	06	32.5	6.5	27	32
BF9-0808T	1/2" - 14	08	1/2"	12	1/2"	08	39	6.5	27	36.5
BF9-1010T	5/8" - 14	10	5/8"	16	5/8"	10	46.5	9.5	27	49
BF9-1212T	3/4" - 14	12	3/4"	20	3/4"	12	62.5	8.7	32	58.8
BF9-1616T	1" - 11	16	1"	25	1"	16	71.5	10.5	38	71

BTM1
BSPT MALE STRAIGHT

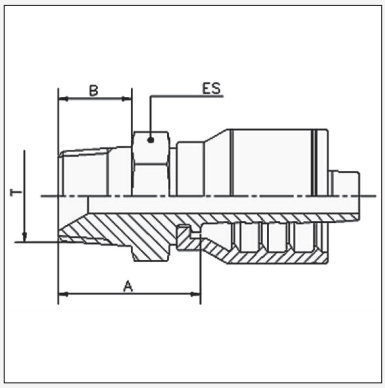

Product Code	BSPT Thread			Nominal ID			Dimensions mm			
	T	Size	Pipe	DN	Inch	Size	A	B	ES	
BTM1-0203T	1/8" - 28	02	1/8"	5	3/16"	03	21	9.7	12	
BTM1-0403T	1/4" - 19	04	1/4"	5	3/16"	03	25.3	14	14	
BTM1-0204T	1/8" - 28	02	1/8"	6	1/4"	04	20.2	9.7	12	
BTM1-0404T	1/4" - 19	04	1/4"	6	1/4"	04	26.5	14	14	
BTM1-0605T	3/8" - 19	06	3/8"	8	5/16"	05	29	15	19	
BTM1-0406T	1/4" - 19	04	1/4"	10	3/8"	06	24.5	14	14	
BTM1-0606T	3/8" - 19	06	3/8"	10	3/8"	06	29	15	19	
BTM1-0608T	3/8" - 19	06	3/8"	12	1/2"	08	29	15	19	
BTM1-0808T	1/2" - 14	08	1/2"	12	1/2"	08	32.5	18	22	
BTM1-1212T	3/4" - 14	12	3/4"	20	3/4"	12	42.5	20	27	
BTM1-1616T	1" - 11	16	1"	25	1"	16	46.5	23	36	

PIRTEK

This page is part of a complete catalogue containing technical and safety data.
All data must be reviewed when selecting a product.
Pirtek reserve the right to change technical specifications without notice

NPT
ORIGIN: NORTH AMERICA

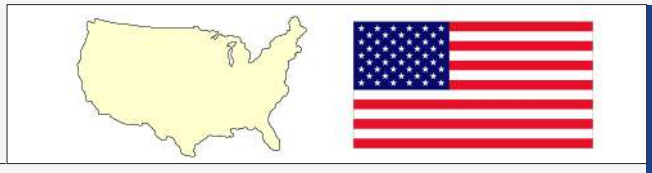

NM1
NPT MALE STRAIGHT

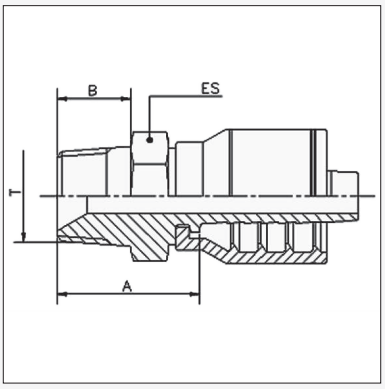

Product Code	NPT Thread			Nominal ID			Dimensions mm			
	T	Size	Pipe	DN	Inch	Size	A	B	ES	
NM1-0202T	1/8” - 27	02	1/8”	3	1/8”	02	20.8	9.5	11.5	
NM1-0202TP	1/8" - 27	02	1/8"	3	1/8"	02	20.8	9.5	11.1	
NM1-0203T	1/8” - 27	02	1/8”	5	3/16”	03	20.8	9.5	11.1	
NM1-0403T	1/4” - 18	04	1/4”	5	3/16”	03	25.8	14	14	
NM1-0204T	1/8” - 27	02	1/8”	6	1/4”	04	22	9.5	14	
NM1-0404T	1/4” - 18	04	1/4”	6	1/4”	04	26.5	14	14	
NM1-0606T	3/8” - 18	06	3/8”	10	3/8”	06	28	14	19	
NM1-0808T	1/2” - 14	08	1/2”	12	1/2”	08	33.5	19	22	
NM1-0810T	1/2” - 14	08	1/2”	16	5/8”	10	33.5	19	24	
NM1-1212T	3/4” - 14	12	3/4”	20	3/4”	12	41.5	19	27	
NM1-1616T	1” - 11½	16	1”	25	1”	16	47.5	24	36	

NF1
NPSM FEMALE STRAIGHT

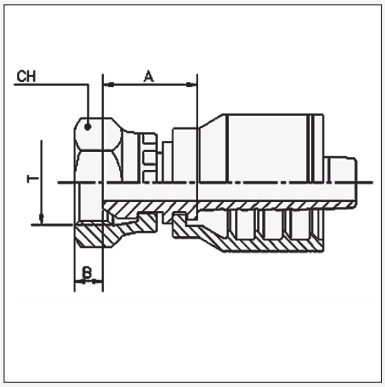

Product Code	BSPP Thread			Nominal ID			Dimensions mm		
	T	Size	Pipe	DN	Inch	Size	A	B	CH
NF1-0404T	1/4” - 18	04	1/4”	6	1/4”	04	17.5	4.2	19
NF1-0606T	3/8” - 18	06	3/8”	10	3/8”	06	26.5	5.7	22

JIC
ORIGIN: NORTH AMERICA

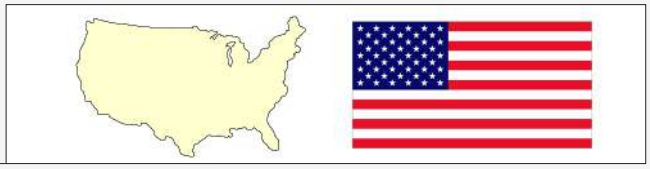

JF1
JIC FEMALE STRAIGHT

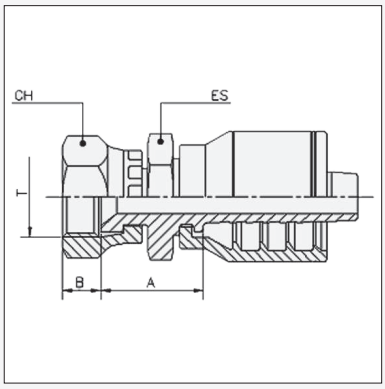

Product Code	JIC Thread			Hose Bore			Dimensions (mm)			
	Thread	Size	Tube	DN	Inch	Size	A	B	CH	ES
JF1-0602T	3/8"-24	06	03	3	1/8"	02	20	8.3	14	14
JF1-0602TP	3/8" - 24	06	03	3	1/8"	02	20	8.3	14	14
JF1-0702T	7/16" - 20	07	04	3	1/8"	02	19.6	8.5	14	11.11
JF1-0702TP	7/16" - 20	07	04	3	1/8"	02	19.6	8.7	14	11.1
JF1-0703T	7/16" - 20	07	04	5	3/16"	03	19.6	8.5	14	11.11
JF1-0704T	7/16" - 20	07	04	6	1/4"	04	20.8	8.5	14	14
JF1-0804T	1/2" - 20	08	05	6	1/4"	04	21.5	10.5	17	14
JF1-0904T	9/16" - 18	09	06	6	1/4"	04	23	9.5	19	14
JF1-0805T	1/2" - 20	08	05	8	5/16"	05	15.5	10.5	17	14
JF1-0905T	9/16" - 18	09	06	8	5/16"	05	21	9.5	19	14
JF1-0906T	9/16" - 18	09	06	10	3/8"	06	24	9.5	19	17
JF1-1206T	3/4" - 16	12	08	10	3/8"	06	25.9	10.7	22	19
JF1-1208T	3/4" - 16	12	08	12	1/2"	08	25.4	10.7	22	19
JF1-1408T	7/8" - 14	14	10	12	1/2"	08	29.8	12.7	27	22
JF1-1708T	1.1/16" - 12	17	12	12	1/2"	08	35.5	13.8	32	27
JF1-1410T	7/8" - 14	14	10	16	5/8"	10	29.8	12.7	27	22
JF1-1710T	1.1/16" - 12	17	12	16	5/8"	10	35.5	13.8	32	27
JF1-1712T	1.1/16" - 12	17	12	20	3/4"	12	36	13.8	32	27
JF1-2116T	1.5/16" - 12	21	16	25	1"	16	35	16	38	32

JM1
JIC MALE STRAIGHT

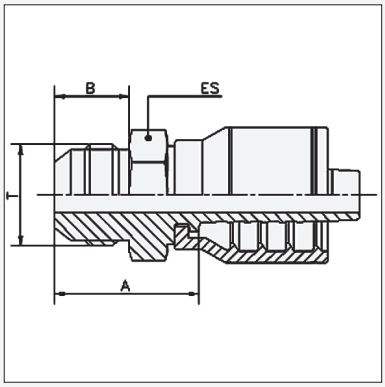

Product Code	JIC Thread			Hose Bore			Dimensions (mm)			
	Thread	Size	Tube	DN	Inch	Size	A	B	ES	
JM1-0703T	7/16" - 20	07	04	5	3/16"	03	25.3	14	14	
JM1-0704T	7/16" - 20	07	04	6	1/4"	04	26.5	14	14	
JM1-0904T	9/16" - 18	09	06	6	1/4"	04	27.5	14	17	
JM1-0905T	9/16" - 18	09	06	8	5/16"	05	27.5	14	17	
JM1-0906T	9/16" - 18	09	06	10	3/8"	06	27.5	14	17	
JM1-1206T	3/4" - 16	12	08	10	3/8"	06	30.2	16.7	19	
JM1-1208T	3/4" - 16	12	08	12	1/2"	08	30.7	16.7	19	
JM1-1408T	7/8" - 14	14	10	12	1/2"	08	34.9	19.3	24	
JM1-1410T	7/8" - 14	14	10	16	5/8"	10	35.3	19.3	24	
JM1-1712T	1.1/16" - 12	17	12	20	3/4"	12	39.4	21.9	27	

PIRTEK

This page is part of a complete catalogue containing technical and safety data.
All data must be reviewed when selecting a product.
Pirtek reserve the right to change technical specifications without notice

JIC
ORIGIN: NORTH AMERICA

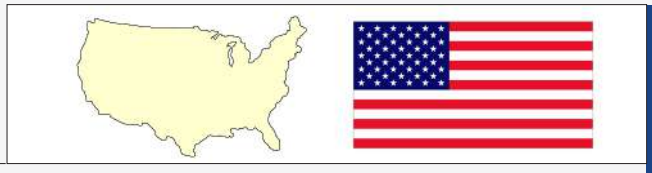

JF4
JIC FEMALE 45° ELBOW

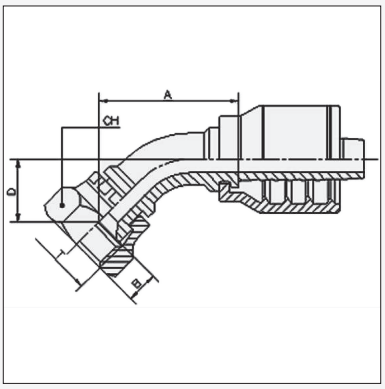

Product Code	JIC Thread			Hose Bore			Dimensions (mm)			
	Thread	Size	Tube	DN	Inch	Size	A	B	CH	D
JF4-0703T	7/16" - 20	07	04	5	3/16"	3	35.3	8.7	14	11.1
JF4-0704T	7/16" - 20	07	04	6	1/4"	04	36	8.5	14	14
JF4-0804T	1/2" - 20	08	05	6	1/4"	04	41.5	10.5	17	15
JF4-0904T	9/16" - 18	09	06	6	1/4"	04	34.5	9.5	19	14.5
JF4-0906T	9/16" - 18	09	06	10	3/8"	06	44.5	9.5	19	11.5
JF4-1206T	3/4" - 16	12	08	10	3/8"	06	44	10.7	22	14.5
JF4-1208T	3/4" - 16	12	08	12	1/2"	08	43.2	10.7	22	13.8
JF4-1408T	7/8" - 14	14	10	12	1/2"	08	55.5	12.5	27	19
JF4-1410T	7/8" - 14	14	10	16	5/8"	10	62.5	12.7	27	24
JF4-1710T †	1.1/16" - 12	17	12	16	5/8"	10	60.5	13.8	32	29
JF4-1712T †	1.1/16" - 12	17	12	20	3/4"	12	70	13.8	32	28.3
JF4-2116T †	1.5/16" - 12	21	16	25	1"	16	83.5	16	38	32

† Pin Nut

JF9
JIC FEMALE 90° ELBOW

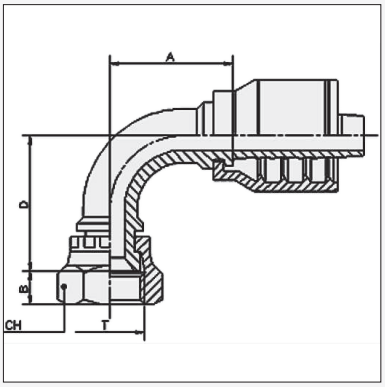

Product Code	JIC Thread			Hose Bore			Dimensions (mm)			
	Thread	Size	Tube	DN	Inch	Size	A	B	CH	D
JF9-0703T	7/16" - 20	07	04	5	3/16"	03	24	8.5	14	46
JF9-0704T	7/16" - 20	07	04	6	1/4"	04	28.5	8.5	15	26.5
JF9-0804T	1/2" - 20	08	05	6	1/4"	04	29	10.5	17	30
JF9-0904T	9/16" - 18	09	06	6	1/4"	04	27.5	9.5	19	27.5
JF9-0805T	1/2" - 20	08	05	8	5/16"	05	32	10.5	17	33
JF9-0905T	9/16" - 18	09	06	8	5/16"	05	30	9.5	19	22
JF9-0906T	9/16" - 18	09	06	10	3/8"	06	31	9.5	19	22
JF9-1206T	3/4" - 16	12	08	10	3/8"	06	31.5	10.7	22	30
JF9-1208T	3/4" - 16	12	08	12	1/2"	08	41	10.7	22	30
JF9-1408T	7/8" - 14	14	10	12	1/2"	08	42.5	12.5	27	40
JF9-1410T	7/8" - 14	14	10	16	5/8"	10	47.5	12.7	27	49
JF9-1710T †	1.1/16" - 12	17	12	16	5/8"	10	48.5	13.8	32	47.5
JF9-1712T †	1.1/16" - 12	17	12	20	3/4"	12	61.5	13.8	32	58.8
JF9-2116T †	1.5/16" - 12	21	16	25	1"	16	71.5	16	38	71

† Pin Nut

SAE
ORIGIN: NORTH AMERICA

SF1
SAE FEMALE STRAIGHT

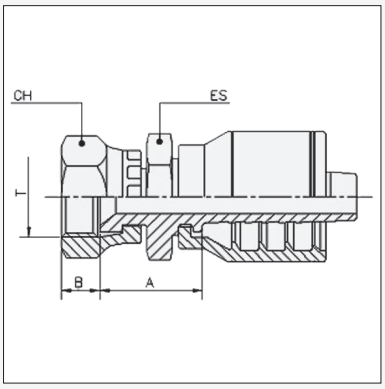

Product Code	SAE Thread			Hose Bore			Dimensions (mm)			
	Thread	Size	Tube	DN	Inch	Size	A	B	CH	ES
SF1-1004T	5/8" - 18	10	06	6	1/4"	04	23.9	10.8	22	19
SF1-1006T	5/8" - 18	10	06	10	3/8"	06	23.9	10.8	22	19
SF1-1712T	1.1/16" - 14	17	12	20	3/4"	12	31.2	14.4	32	27

SF9
SAE FEMALE 90° ELBOW

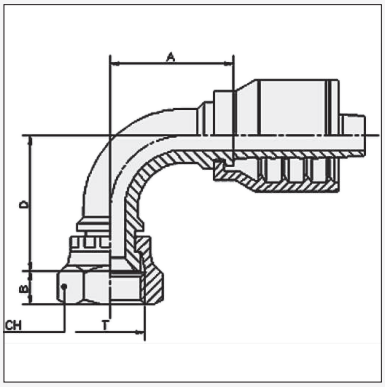

Product Code	SAE Thread			Hose Bore			Dimensions (mm)			
	Thread	Size	Tube	DN	Inch	Size	A	B	D	CH
SF9-1006T	5/8" - 18	10	06	10	3/8"	06	37	10.8	37	22

This page is part of a complete catalogue containing technical and safety data.
All data must be reviewed when selecting a product.
Pirtek reserve the right to change technical specifications without notice

ORFS FITTINGS
ORIGIN: NORTH AMERICA

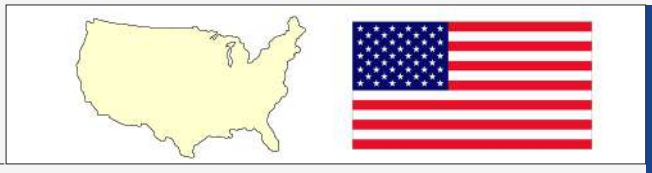

OF1
O-RING FACE SEAL FEMALE STRAIGHT

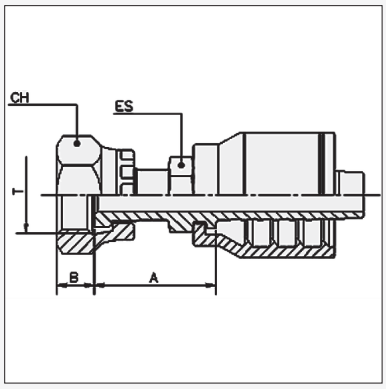

Product Code	UN Thread			Hose Bore			Dimensions (mm)			
	Thread	Size	Tube	DN	Inch	Size	A	B	CH	ES
OF1-0402T	9/16"-18	04	04	3	1/8"	02	27.5	8	19	14
OF1-0402TP	9/16" - 18	04	04	3	1/8"	02	30	8	17	14
OF1-0404T	9/16" - 18	04	04	6	1/4"	04	28	8	19	14
OF1-0604T	11/16" - 16	06	06	6	1/4"	04	31.5	9.5	22	17
OF1-0606T	11/16" - 16	06	06	10	3/8""	06	32	9.5	22	17
OF1-0806T	13/16" - 16	08	08	10	3/8"	06	36.5	11	24	19
OF1-0808T	13/16" - 16	08	08	12	1/2"	08	35	11	24	19
OF1-1008T	1" - 14	10	10	12	1/2"	08	39	13.5	30	24
OF1-1010T	1" - 14	10	10	16	5/8"	10	39.1	13.5	30	24
OF1-1210T	1.3/16"-12	12	12	16	5/8"	10	44	14.5	36	30
OF1-1212T	1.3/16" - 12	12	12	20	3/4"	12	44	15	36	30

OM1
O-RING FACE SEAL MALE STRAIGHT

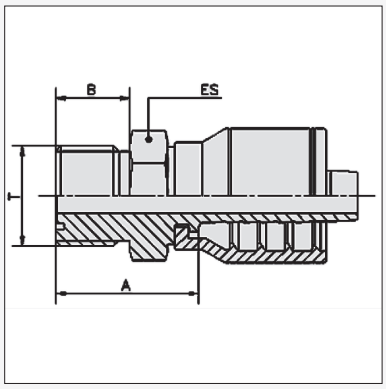

Product Code	UN Thread			Hose Bore			Dimensions (mm)			
	Thread	Size	Tube	DN	Inch	Size	A	B	ES	
OM1-0404T †	9/16" - 18	04	04	6	1/4"	04		9.8	15	
OM1-0606T	11/16" - 16	06	06	10	3/8"	06		11.2	19	
OM1-0808T †	13/16" - 16	08	08	12	1/2"	08		12.8	22	
OM1-1008T †	1" - 14	10	10	16	1/2"	08		15.5	27	

† Available only to special order

ORFS FITTINGS

ORIGIN: NORTH AMERICA

OF4

O-RING FACE SEAL FEMALE 45° ELBOW

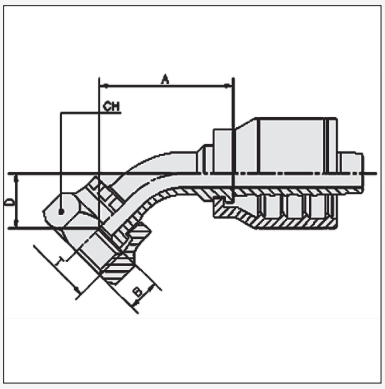

Product Code	UN Thread			Hose Bore			Dimensions (mm)			
	Thread	Size	Tube	DN	Inch	Size	A	B	D	CH
OF4-0404T	9/16" - 18	04	04	6	1/4"	04	43.5	8	11	19
OF4-0604T	11/16" - 16	06	06	6	1/4"	04	36	9.5	15	22
OF4-0606T	11/16" - 16	06	06	10	3/8"	06	47.5	9.5	15	22
OF4-0806T	13/16" - 16	08	08	10	3/8"	06	43.5	11	15	24
OF4-0808T	13/16" - 16	08	08	12	1/2"	08	56.5	11	14	24
OF4-1010T	1" - 14	10	10	16	5/8"	10	56.5	13.5	21	30
OF4-1210T	1.3/16"-12	12	12	16	5/8"	10	60.5	14.5	23.2	36
OF4-1212T	1.3/16" - 12	12	12	20	3/4"	12	64.4	14.5	21.5	36

OF9

O-RING FACE SEAL FEMALE 90° ELBOW

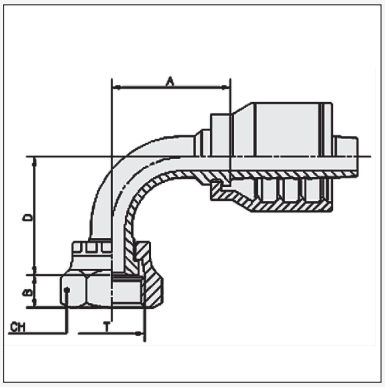

Product Code	UN Thread			Hose Bore			Dimensions (mm)			
	Thread	Size	Tube	DN	Inch	Size	A	B	D	CH
OF9-0404T	9/16" - 18	04	04	6	1/4"	04	29	8	25	19
OF9-0604T	11/16" - 16	06	06	6	1/4"	04	27	9.5	27	22
OF9-0606T	11/16" - 16	06	06	10	3/8"	06	32.5	9.5	28	22
OF9-0806T	13/16" - 16	08	08	10	3/8"	06	33	11	30	24
OF9-0808T	13/16" - 16	08	08	12	1/2"	08	40.5	11	30	24
OF9-1008T	1" - 14	10	10	12	1/2"	08	44	13.5	34	30
OF9-1010T	1" - 14	10	10	16	5/8"	10	49	13.5	41	30
OF9-1212T	1.3/16" - 12	12	12	19	3/4"	12	57	14.5	48	36

PIRTEK

This page is part of a complete catalogue containing technical and safety data.
All data must be reviewed when selecting a product.
Pirtek reserve the right to change technical specifications without notice

METRIC FITTINGS
ORIGIN: GERMANY

DLF1
DKL (LIGHT) METRIC FEMALE STRAIGHT

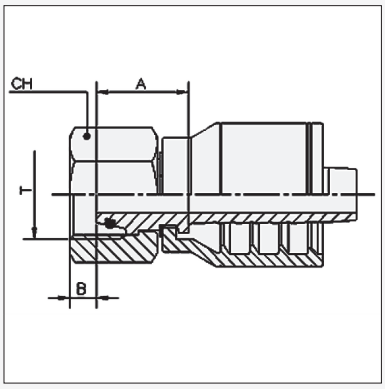

Product Code	Metric Thread			Hose Bore			Dimensions (mm)			
	Thread	Size	Tube	DN	Inch	Size	A	B	CH	
DLF1-1204T	M12 x 1.5	12	6 L	6	1/4”	04	20.9	2.6	16	
DLF1-1404T	M14 x 1.5	14	8 L	6	1/4”	04	25	1.5	17	
DLF1-1604T	M16 x 1.5	16	10 L	6	1/4"	04	26.5	1.5	19	
DLF1-1605T	M16 x 1.5	16	10 L	8	5/16””	05	26.5	1.5	19	
DLF1-1805T	M18 x 1.5	18	12 L	8	5/16"	05	26	1.5	22	
DLF1-1606T	M16 x 1.5	16	10 L	10	3/8”	06	27.5	1.5	19	
DLF1-1806T	M18 x 1.5	18	12 L	10	3/8”	06	26	1.5	22	
DLF1-2206T	M22 x 1.5	22	15 L	10	3/8”	06	27.5	2.5	27	
DLF1-2208T	M22 x 1.5	22	15 L	12	1/2"	08	28.5	2.5	27	
DLF1-2610T	M26 x 1.5	26	18 L	16	5/8”	10	29	2	32	
DLF1-3012T	M30 x 2	30	22 L	20	3/4”	12	29.5	3.5	36	
DLF1-3616T	M36 x 2	36	28 L	25	1”	16	30.5	3.5	41	

DLF4
DKL (LIGHT) METRIC FEMALE 45° ELBOW

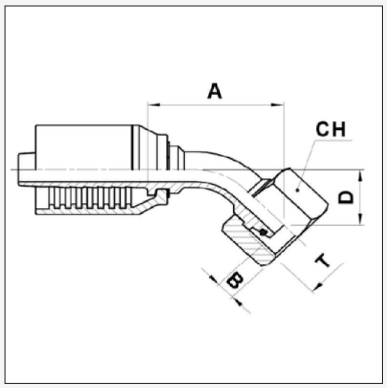

Product Code	Metric Thread			Hose Bore			Dimensions (mm)			
	Thread	Size	Tube	DN	Inch	Size	A	B	D	CH
DLF4-1806T	M18 x 1.5	18	12 L	10	3/8"	06	42.6	1.5	19.2	22
DLF4-2610T	M26 x 1.5	26	18 L	16	5/8"	10	62.5	2	25.5	32

DLF9
DKL (LIGHT) METRIC FEMALE 90° ELBOW

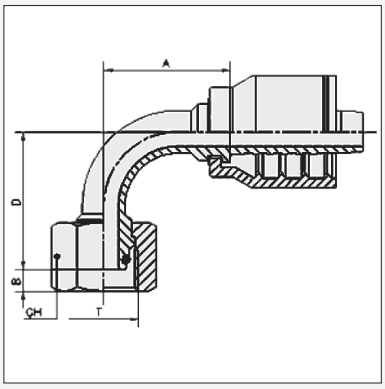

Product Code	Metric Thread			Hose Bore			Dimensions (mm)			
	Thread	Size	Tube	DN	Inch	Size	A	B	D	CH
DLF9-1806T	M18 x 1.5	18	12 L	10	3/8"	06	30.5	1.5	36	22
DLF9-2610T	M26 x 1.5	26	18 L	16	5/8”	10	54	2	56	32

This page is part of a complete catalogue containing technical and safety data.
All data must be reviewed when selecting a product.
Pirtek reserve the right to change technical specifications without notice

METRIC FITTINGS
ORIGIN: GERMANY

DLM1
DKL (LIGHT) METRIC MALE STRAIGHT

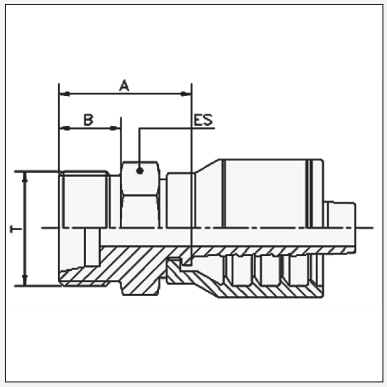

Product Code	Metric Thread			Hose Bore			Dimensions (mm)		
	Thread	Size	Tube	DN	Inch	Size	A	B	ES
DLM1-1204T	M12 x 1.5	12	6 L	6	1/4”	04	22.5	10	14
DLM1-1404T	M14 x 1.5	14	8 L	6	1/4”	04	22.5	10	14
DLM1-1605T	M16 x 1.5	16	10 L	08	5/16””	05	24.5	11	17
DLM1-1606T	M16 x 1.5	16	10 L	10	3/8”	06	24.5	11	17
DLM1-1806T	M18 x 1.5	18	12 L	10	3/8”	06	25	11	19
DLM1-2206T	M22 x 1.5	22	15 L	10	3/8”	06	26	12	22
DLM1-2208T	M22 x 1.5	22	15 L	12	1/2”	08	26.5	12	22
DLM1-2610T	M26 x 1.5	26	18 L	16	5/8”	10	29	12	27
DLM1-3012T	M30 x 2	30	22 L	20	3/4”	12	31.5	14	30
DLM1-3616T	M36 x 2	36	28 L	25	1”	16	33.5	14	36

DSF1
DKS (HEAVY) METRIC FEMALE STRAIGHT

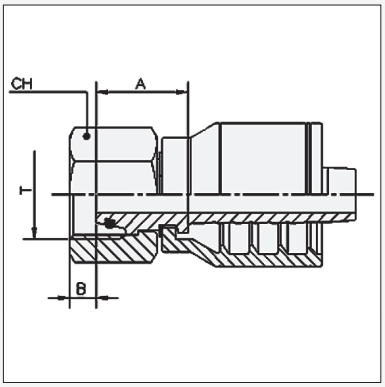

Product Code	Metric Thread			Hose Bore			Dimensions (mm)		
	Thread	Size	Tube	DN	Inch	Size	A	B	CH
DSF1-1604T	M16 x 1.5	16	8 S	6	1/4”	04	26.5	2.5	19
DSF1-1804T	M18 x 1.5	18	10 S	6	1/4””	04	28	2	22
DSF1-2005T	M20 x 1.5	20	12 S	8	5/16”	05	27	2	24
DSF1-2006T	M20 x 1.5	20	12 S	10	3/8”	06	25.5	2	24
DSF1-2206T	M22 x 1.5	22	14 S	10	3/8”	06	28.5	4	27
DSF1-2408T	M24 x 1.5	24	16 S	12	1/2”	08	32	3	30
DSF1-3612T	M36 x 2	36	25 S	20	3/4”	12	39.5	3	46

DSM1
DKS (HEAVY) METRIC MALE STRAIGHT

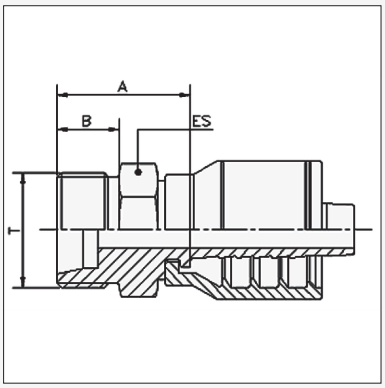

Product Code	Metric Thread			Hose Bore			Dimensions (mm)		
	Thread	Size	Tube	DN	Inch	Size	A	B	ES
DSM1-1604T	M16 x 1.5	16	8 S	6	1/4”	04	26	12	17
DSM1-1804T	M18 x 1.5	18	10 S	6	1/4”	04	26	12	19
DSM1-2006T	M20 x 1.5	20	12 S	10	3/8”	06	26	12	22
DSM1-2206T	M22 x 1.5	22	14 S	10	3/8”	06	28	14	22
DSM1-2408T	M24 x 1.5	24	16 S	12	1/2”	08	28.5	14	24
DSM1-3612T	M36 x 2	36	25 S	20	3/4”	12	36.5	18	36

PIRTEK

This page is part of a complete catalogue containing technical and safety data.
All data must be reviewed when selecting a product.
Pirtek reserve the right to change technical specifications without notice

METRIC FITTINGS
ORIGIN: GERMANY

SPM1
METRIC STANDPIPE STRAIGHT

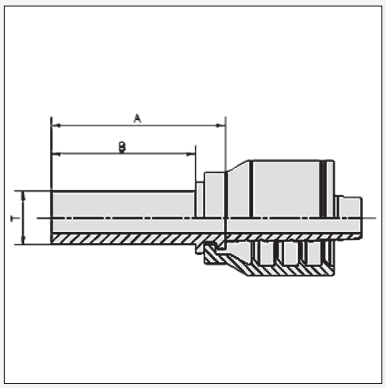

Product Code	Metric Thread			Hose Bore			Dimensions (mm)		
	Thread	Size	Tube	DN	Inch	Size	T	A	B
SPM1-0603T	06	06	6 L/S	05	3/16”	03	6	28	22
SPM1-1608T	16	16	16 S	12	1/2”	08	16	37	30
SPM1-3016T	30	30	30 S	25	1"	16	30	53.5	44

BM1
METRIC BANJO STRAIGHT

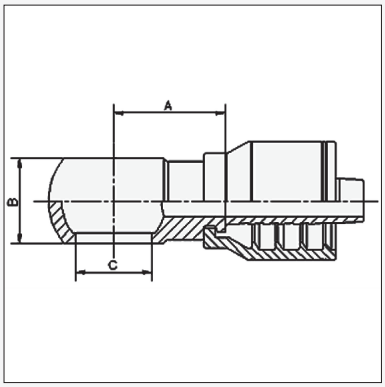

Product Code	Banjo		Nominal ID			Dimensions mm		
	Bolt	Size	DN	Inch	Size	A	C	B
KBM1-1003T †	M10 x 1	10	5	3/16"	03	25	10	10
BM1-1003T	M10 x 1	10	5	3/16”	03	21	10	10
BM1-1004T	M10 x 1	10	6	1/4"	04	22	10	10
BM1-1204T	M12 x 1.5	12	6	1/4"	04	21	12	12
BM1-1406T	M14 x 1.5	14	10	3/8"	06	24	14	14
BM1-1606T	M16 x 1.5	16	10	3/8"	06	24	16	18

† Used in the replacement of Komatsu tube assemblies 195-22-12340 and 195-22-22380

BMB
METRIC BANJO BOLT

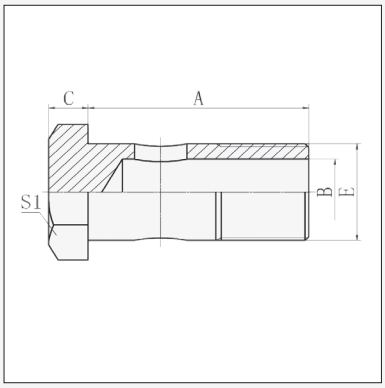

Product Code	Metric Thread		Hose Bore			Dimension (mm)				
	E	Size	DN	Inch	Size	A	B	C	S1	E
BMB-10	M10 x 1	10	05	3/16”	03	22	4	5	15	10
BMB-12	M12 x 1.5	12	06	1/4”	04	24	6	6	17	12
BMB-14	M14 x 1.5	14	10	3/8”	06	26	8	7	19	14
BMB-16	M16 x 1.5	16	10	3/8”	06	28	9	7.5	22	16
BMB-18	M18 x 1.5	18	10, 12	3/8” , 1/2”	06 , 08	32	11	8	24	18
BMB-22	M22 x 1.5	22	16	5/8”	10	39	14	9	27	22
BMB-26	M26 x 1.5	26	20	3/4”	12	45	18	10	32	26

PIRTEK

This page is part of a complete catalogue containing technical and safety data.
All data must be reviewed when selecting a product.
Pirtek reserve the right to change technical specifications without notice

JAPANESE FITTINGS

ORIGIN: JAPAN

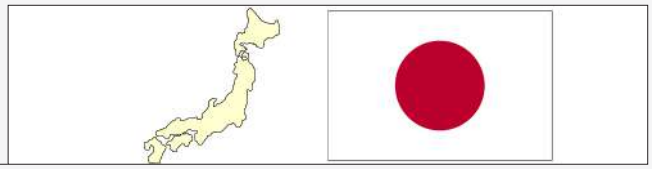

JBF1

JIS BSPP

FEMALE STRAIGHT (MITSUBISHI)

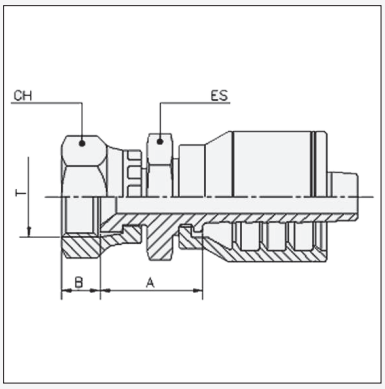

Product Code	Thread			Hose Bore			Dimensions (mm)			
	BSPP	Size	Pipe	DN	Inch	Size	A	B	CH	ES
JBF1-0404T	1/4" - 19	04	1/4"	06	1/4"	04	21	8	19	19
JBF1-0606T	3/8" - 19	06	3/8"	10	3/8"	06	22	9.5	22	19
JBF1-0808T	1/2" - 14	08	1/2"	12	1/2"	08	24.9	11	27	22
JBF1-1010T	5/8" - 14	10	5/8"	16	5/8"	10				

JMF1

JIS METRIC

FEMALE STRAIGHT (KOMATSU)

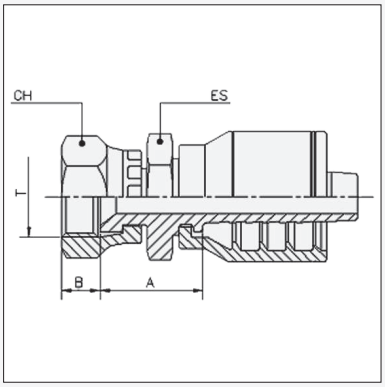

Product Code	Thread			Hose Bore			Dimensions (mm)			
	Metric	Size	Pipe	DN	Inch	Size	A	B	CH	ES
JMF1-1204T	M12 x 1.5	12	12	06	1/4"	04	22.5	8.7	17	14
JMF1-1404T	M14 x 1.5	14	14	06	1/4"	04	24	10	19	19
JMF1-1406T	M14 x 1.5	14	14	10	3/8"	06	25	10	19	19
JMF1-1606T	M16 x 1.5	16	16	10	3/8"	06	23.2	9.3	22	19
JMF1-1806T	M18 x 1.5	18	18	10	3/8"	06	24	11.5	24	19
JMF1-2006T	M20 x 1.5	20	20	10	3/8"	06	25.3	11.2	27	19
JMF1-2206T	M22 x 1.5	22	22	10	3/8"	06	25.5	14	27	19
JMF1-2208T	M22 x 1.5	22	22	12	1/2"	08	27	14	27	22
JMF1-2408T	M24 x 1.5	24	24	12	1/2"	08	28.4	15.1	32	24
JMF1-2410T	M24 x 1.5	24	24	16	5/8"	10	28.4	15.1	32	24
JMF1-2412T	M24 x 1.5	24	24	20	3/4"	12	29.9	15.1	32	27
JMF1-3012T	M30 x 1.5	30	30	20	3/4"	12	33.2	18.3	36	30
JMF1-3312T	M33 x 1.5	33	33	20	3/4"	12	32.2	21.3	41	32

PIRTEK

This page is part of a complete catalogue containing technical and safety data.
All data must be reviewed when selecting a product.
Pirtek reserve the right to change technical specifications without notice

MISCELLANEOUS FITTINGS
WELD ON

WO1
WELD ON STRAIGHT TAIL
(LIFESAVER)

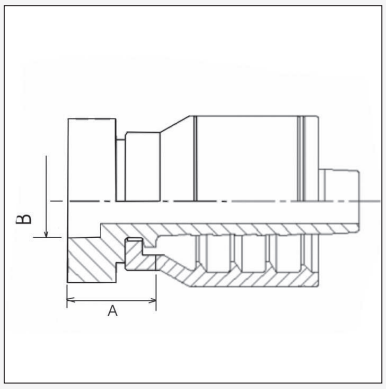

Product Code	Flange			Hose Bore			Dimensions (mm)					
	Bore	Size	ø ins.	DN	Inch	Size	A	ø B				
WO1-0404T	04	04	1/4”	06	1/4”	04	14.5	6.5				
WO1-0606T	06	06	3/8”	10	3/8”	06	10.5	9.55				
WO1-0808T	08	08	1/2”	12	1/2”	08	17	12.85				
WO1-1010T	10	10	5/8”	16	5/8”	10	17	16				
WO1-1212T	12	12	3/4”	20	3/4”	12	18.5	19.2				
WO1-1616T	16	16	1”	25	1”	16	22.5	25.6				

HJ1
HOSE JOINER
CRIMP STYLE

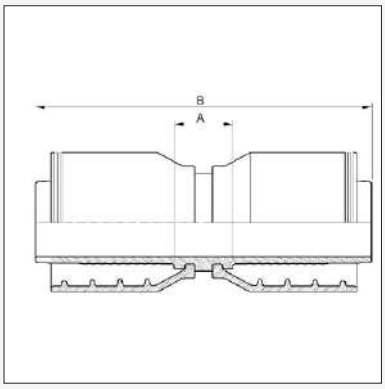

"Product Code"	Hose Tail			Hose Tail			Dimensions			
	DN	Inch	Size	DN	Inch	Size	A	B		
HJ1-0404T	6	1/4"	04	6	1/4"	04	13.0	68.0		
HJ1-0505T	8	5/16"	05	8	5/16"	05	13.0	68.0		
HJ1-0606T	10	3/8"	06	10	3/8"	06	13.0	72.0		

KT1
KARCHER ® STRAIGHT HOSE TAIL
COMPLETE WITH NUT

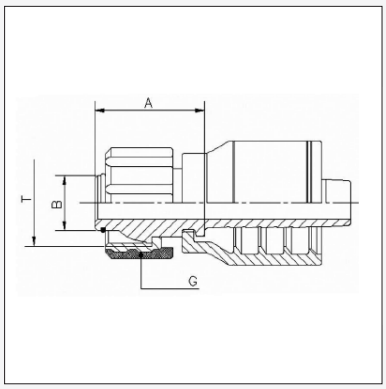

"Product Code"	Hose Bore			Dimensions (mm)			
	DN	Inch	Size	T	A	B	G
KT1-2204T	6	1/4"	4	M22 x 1.5	33	14	36

FERRULES
ORIGIN: N/A

IF
INTERLOCK FERRULES

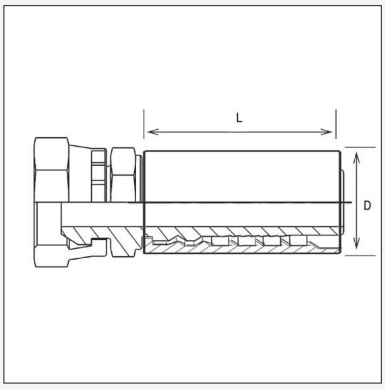

Product Code	To Suit Hose	Hose Bore			Dimension (mm)	
		DN	Inch	Size	L	Ø D
IF13-12I	C35, C42, 100 R13, 100 R15	20	3/4”	12	60	38
IF13-16I	C35, C42, 100 R13, 100 R15	25	1”	16	74.5	46
IF13-20I	C35, C42, 100 R13, XT5, 100 R15	32	1.1/4”	20	88	60
IF13-24I	C35, C42, 100 R13, XT5, 100 R15	38	1.1/2”	24	94	67
IF13-32I	C35, C42, 100 R13, XT5	50	2”	32	99	84.5
IFSWB433-08I	WB2-08 (WATER BLAST)	12	1/2"	08	53	32.8
IFSWB442-12I	WB2-12 (WATER BLAST)	20	3/4"	12	61	41.8
IFSWB636-08I	WB3-08 (WATER BLAST)	12	1/2"	08	54.9	35.9

IFBS & IFEH
INTERLOCK EXTRA HEAVY FERRULES

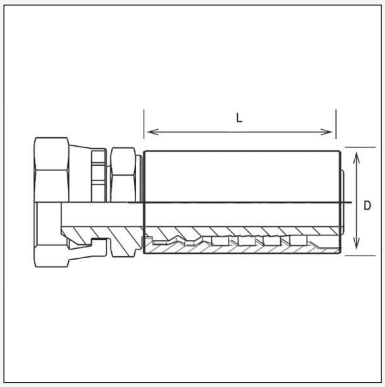

Product Code	To Suit Hose	Hose Bore			Dimension (mm)	
		DN	Inch	Size	L	Ø D
IFBS-32I	C42-32 Series II / PC42-32	50	2"	32	109.0	87.2
IFEH-32I *	C42EH-32	50	2”	32	107.1	87.6

***** These ferrules are for use within a complete 'extra heavy' environment. For maximum effectiveness, all components of the system should be deployed.

The recommended components include:

Hose Guard **EHG-032**

Hose Boot **EHB-032**

Sealing rings for the hose tail **YEH-32** (2 required)

A compatible interlock hose tail with 'EH' designation in the Product Code

See page G76 for hose guard and boot details.

Additionally, those tails utilising a tapered flange must use the appropriate flange clamp **AFTF6-32**

PIRTEK

**This page is part of a complete catalogue containing technical and safety data.
All data must be reviewed when selecting a product.
Pirtek reserve the right to change technical specifications without notice**

JIC FITTINGS
ORIGIN: NORTH AMERICA

JFI
JIC FEMALE STRAIGHT

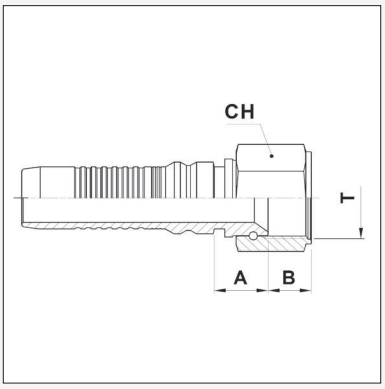

Product Code	JIC Thread			Hose Bore			Dimensions (mm)			
	Thread T	Size	Tube	DN	Inch	Size	A	B	CH	
JF1-1712I	1.1/16" - 12	17	12	20	3/4"	12	19.5	13.8	32	
JF1-2116I	1.5/16" - 12	21	16	25	1"	16	21	16	38	
JF1-2620I	1.5/8" - 12	26	20	32	1.1/4"	20	25.3	16	50	

JF4
JIC FEMALE 45° ELBOW

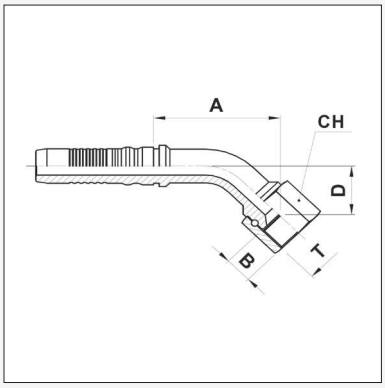

Product Code	JIC Thread			Hose Bore			Dimensions (mm)			
	Thread T	Size	Tube	DN	Inch	Size	A	B	CH	D
JF4-1712I	1.1/16" - 12	17	12	20	3/4"	12	73.5	13.8	32	31
JF4-2116I	1.5/16" - 12	21	16	25	1"	16	82	16	38	42
JF4-2620I	1.5/8" - 12	26	20	32	1.1/4"	20	94.7	16	50	36.3

JF9
JIC FEMALE 90° ELBOW

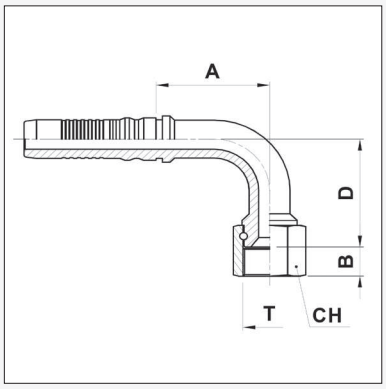

Product Code	JIC Thread			Hose Bore			Dimensions (mm)			
	Thread T	Size	Tube	DN	Inch	Size	A	B	CH	D
JF9-1712I	1.1/16" - 12	17	12	20	3/4"	12	59.2	13.8	32	59
JF9-2116I	1.5/16" - 12	21	16	25	1"	16	68	16	38	77
JF9-2620I	1.5/8" - 12	26	20	32	1.1/4"	20	79.7	16	50	77

This page is part of a complete catalogue containing technical and safety data.
All data must be reviewed when selecting a product.
Pirtek reserve the right to change technical specifications without notice

SAE FLANGES

ORIGIN: NORTH AMERICA

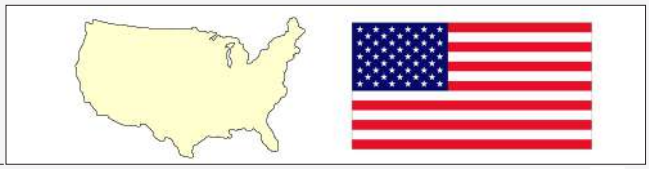

C616

3000 PSI CODE 61
60° ELBOW FLANGE

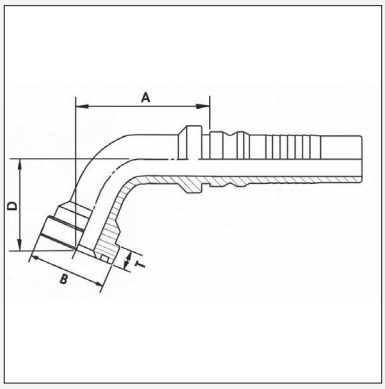

Product Code	Flange			Hose Bore			Dimensions (mm)			
	Bore	Size	ø ins.	DN	Inch	Size	A	øB		D
C616-3232I	2”	32	2.13/16”	50	2”	32	195.5	71.4		75

C619

3000 PSI CODE 61
90° ELBOW FLANGE

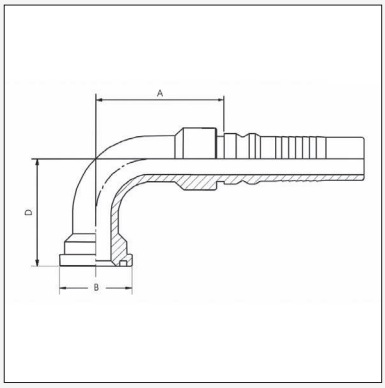

Product Code	Flange			Hose Bore			Dimensions (mm)			
	Bore	Size	ø ins.	DN	Inch	Size	A	øB	T	D
C619-2020I	1.1/4”	20	2”	32	1.1/4”	20	83.7	50.8		69.2
C619-3232I	2”	32	2.13/16”	50	2”	32	145	71.4		123

This page is part of a complete catalogue containing technical and safety data.
All data must be reviewed when selecting a product.
Pirtek reserve the right to change technical specifications without notice

SAE FLANGES
ORIGIN: NORTH AMERICA

C621
6000 PSI CODE 62
STANDARD AND EXTENDED STRAIGHT FLANGES

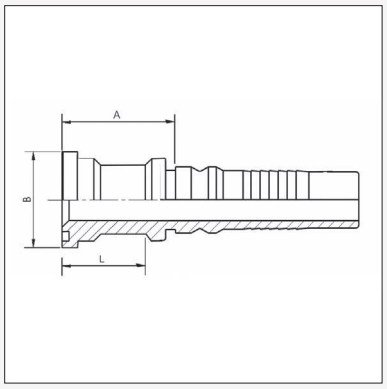

Product Code	Flange			Hose Bore			Dimensions (mm)			
	Bore	Size	ø ins.	DN	Inch	Size	A	øB	L	
C621-1616I	1”	16	1.7/8”	25	1”	16	57.5	47.6		
C621-2016I	1.1/4”	20	2.1/8”	25	1”	16	64.5	54		
C621-2020I	1.1/4”	20	2.1/8”	32	1.1/4”	20	67.2	54		
C621-2420I	1.1/2”	24	2.1/2”	32	1.1/4”	20	73.2	63.5		
C621-2424I	1.1/2”	24	2.1/2”	38	1.1/2”	24	73	63.5		
C621-2424I-100	1.1/2”	24	2.1/2”	38	1.1/2”	24	105.5	63.5	100	
C621-3224I	2”	32	3.1/8”	38	1.1/2”	24	82	79.4		
C621-3232I	2”	32	3.1/8”	50	2”	32	83.5	79.4		
C621-3232I-120	2"	32	3.1/8"	50	2"	32	127	120		
C621BS-3232I	2"	32	3.1/8"	50	2"	32	100	79.4		
C621EH-3232I †	2”	32	3.1/8”	50	2”	32	92.3	79.4		

† Use of Hose Guard and Boot **HG-032** and **EHB-032** is recommended in conjunction. See page G76
These Extra Heavy fittings require also Ferrule **IFEH-32I** and 2 O-Rings **YEH-32** (as a seal on the tail)

C621C
6000 PSI SUPERCAT
STRAIGHT SUPERCAT FLANGE

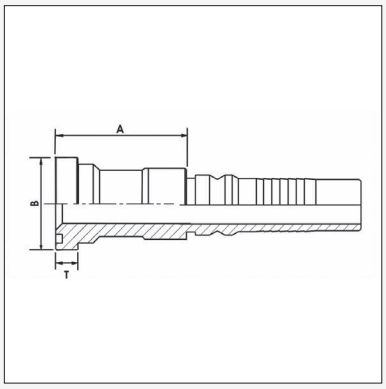

Product Code	Flange			Hose Bore			Dimensions (mm)			
	Bore	Size	ø ins.	DN	Inch	Size	A	øB	T	
C621C-2020I	1.1/4”	20	2.1/8”	32	1.1/4”	20	71.4	54	14.2	
C621C-2420I	1.1/2”	24	2.1/2”	32	1.1/4”	20	75.2	63.5	14.2	
C621C-2424I	1.1/2”	24	2.1/2”	38	1.1/2”	24	75	63.5	14.2	

C621EHTF
6000 PSI EXTRA HEAVY
STRAIGHT TAPERED FLANGE

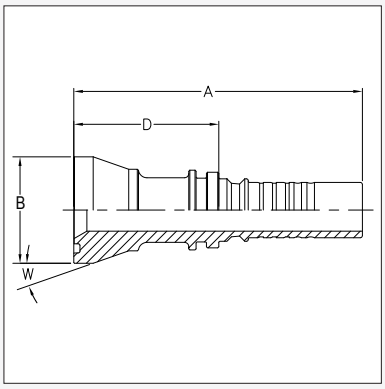

Product Code	Flange			Hose Bore			Dimensions (mm)			
	Bore	Size	ø ins.	DN	Inch	Size	D	øB	A	H
C621EHTF-3232I †	2”	32	3.1/8”	50	2”	32	107	83.5	215	-

† Use of Hose Guard and Boot **HG-032** and **EHB-032** is recommended in conjunction. See page G76
These Extra Heavy fittings require also Ferrule **IFEH-32I** and 2 O-Rings **YEH-32** (as a seal on the tail)
The appropriate flange clamp is designated **AFTF6-32** (see page D83)

SAE FLANGES
ORIGIN: NORTH AMERICA

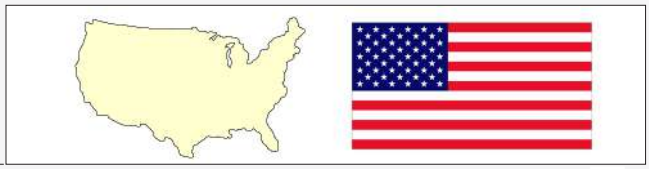

C622
6000 PSI CODE 62
20° ELBOW FLANGE

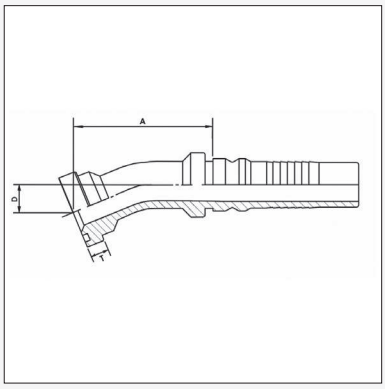

Product Code	Flange			Hose Bore			Dimensions (mm)			
	Bore	Size	ø ins.	DN	Inch	Size	A	øB	T	D
C622-2424I	1.1/2”	24	2.1/2”	38	1.1/2”	24		63.5	12.6	
C622-3232I	2”	32	3.1/8”	50	2”	32	83.5	79.4	12.6	21

C622C
6000 PSI SUPERCAT
22° ELBOW SUPERCAT FLANGE

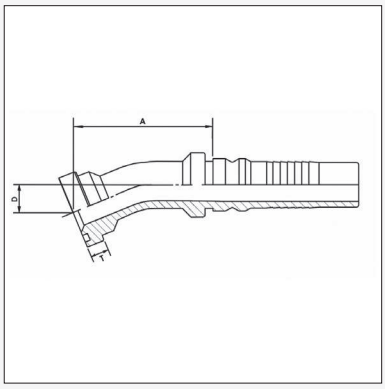

Product Code	Flange			Hose Bore			Dimensions (mm)			
	Bore	Size	ø ins.	DN	Inch	Size	A	øB	T	D
C622C-2020I	1.1/4”	20	2.1/8”	32	1.1/4”	20	129.7	54	14.2	21

C622EHTF
6000 PSI EXTRA HEAVY
22½° ELBOW TAPERED FLANGE

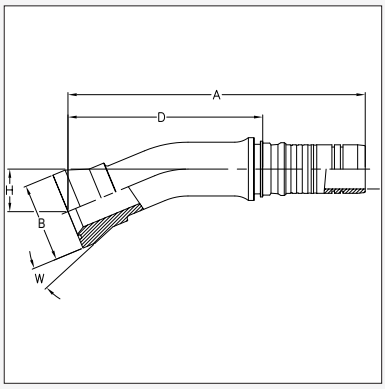

Product Code	Flange			Hose Bore			Dimensions (mm)			
	Bore	Size	ø ins.	DN	Inch	Size	D	øB	A	H
C622EHTF-3232I †	2”	32	3.1/8”	50	2”	32	205	83.5	315	45

† Use of Hose Guard and Boot **HG-032** and **EHB-032** is recommended in conjunction. See page G76
These Extra Heavy fittings require also Ferrule **IFEH-32I** and 2 O-Rings **YEH-32** (as a seal on the tail)
The appropriate flange clamp is designated **AFTF6-32** (see page D83)

PIRTEK
This page is part of a complete catalogue containing technical and safety data.
All data must be reviewed when selecting a product.
Pirtek reserve the right to change technical specifications without notice

SAE FLANGES
ORIGIN: NORTH AMERICA

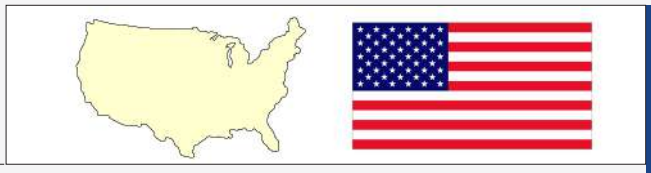

C623C
6000 PSI SUPERCAT
30° ELBOW SUPERCAT FLANGE

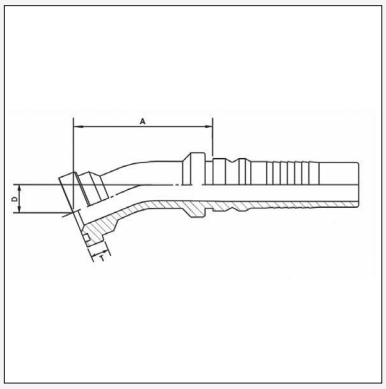

Product Code	Flange			Hose Bore			Dimensions (mm)			
	Bore	Size	ø ins.	DN	Inch	Size	A	øB	T	D
C623C-1212I	3/4”	12	1.5/8”	20	3/4”	12	79	41.3	14.2	22
C623C-1612I	1”	16	1.7/8”	20	3/4”	12	83	47.6	14.2	26
C623C-1616I	1”	16	1.7/8”	25	1”	16	85.5	47.6	14.2	21
C623C-2016I	1.1/4”	20	2.1/8”	25	1”	16	99.5	54	14.2	29
C623C-2020I	1.1/4”	20	2.1/8”	32	1.1/4”	20	119	54	14.2	30.5
C623C-2420I	1.1/2”	24	2.1/2”	32	1.1/4”	20	124.7	63.5	14.2	30
C623C-2424I	1.1/2”	24	2.1/2”	38	1.1/2”	24	133	63.5	14.2	29.5

C624
6000 PSI CODE 62
45° ELBOW FLANGE

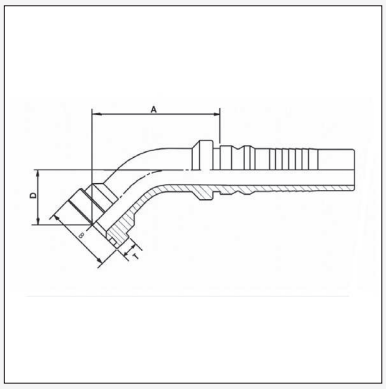

Product Code	Flange			Hose Bore			Dimensions (mm)			
	Bore	Size	ø ins.	DN	Inch	Size	A	øB	T	D
C624-1616I	1”	16	1.7/8”	25	1”	16	79	47.6	9.53	31
C624-2016I	1.1/4”	20	2.1/8”	25	1”	16	92	54	10.29	39
C624-2020I	1.1/4”	20	2.1/8”	32	1.1/4”	20	111	54	10.29	43.5
C624-2420I	1.1/2”	24	2.1/2”	32	1.1/4”	20	112	63.5	12.57	48
C624-2424I	1.1/2”	24	2.1/2”	38	1.1/2”	24	122	63.5	12.57	47
C624-3224I	2”	32	3.1/8”	38	1.1/2”	24	133.5	79.4	12.57	57
C624-3232I	2”	32	3.1/8”	50	2”	32	164.6	79.4	12.57	60
C624BS-3232I-065	2"	32	3.1/8"	50	2"	32	162	79.4	12.57	65
C624EHL-3232I-069 †	2”	32	3.1/8”	50	2”	32	189.2	79.4	12.57	69

† Use of Hose Guard and Boot **HG-032** and **EHB-032** is recommended in conjunction. See page G76
These Extra Heavy fittings require also Ferrule **IFEH-32I** and 2 O-Rings **YEH-32** (as a seal on the tail)

C624C
6000 PSI SUPERCAT
45° ELBOW SUPERCAT FLANGE

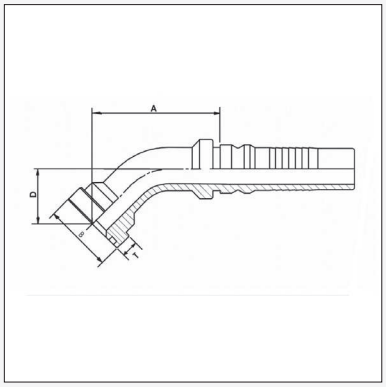

Product Code	Flange			Hose Bore			Dimensions (mm)			
	Bore	Size	ø ins.	DN	Inch	Size	A	øB	T	D
C624C-2420I	1.1/2”	24	2.1/2”	32	1.1/4”	20	114	63.5	14.2	45.2
C624C-2424I	1.1/2”	24	2.1/2”	38	1.1/2”	24	123	63.5	14.2	48

SAE FLANGES
ORIGIN: NORTH AMERICA

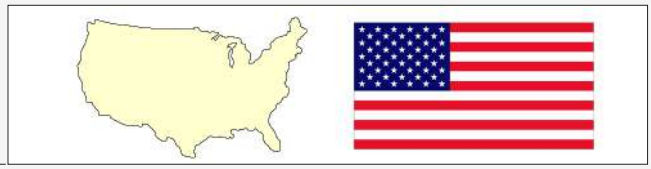

C624EHTF
6000 PSI EXTRA HEAVY
45° ELBOW TAPERED FLANGE

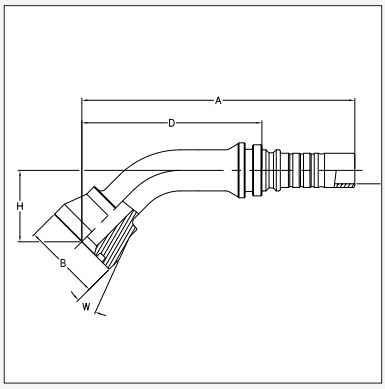

Product Code	Flange			Hose Bore			Dimensions (mm)			
	Bore	Size	ø ins.	DN	Inch	Size	D	øB	A	H
C624EHTF-3232I †	2”	32	3.1/8”	50	2”	32	200	83.5	308	90

† Use of Hose Guard and Boot **HG-032** and **EHB-032** is recommended in conjunction. See page G76
These Extra Heavy fittings require also Ferrule **IFEH-32I** and 2 O-Rings **YEH-32** (as a seal on the tail)
The appropriate flange clamp is designated **AFTF6-32** (see page D83)

C626
6000 PSI CODE 62
60° ELBOW FLANGE

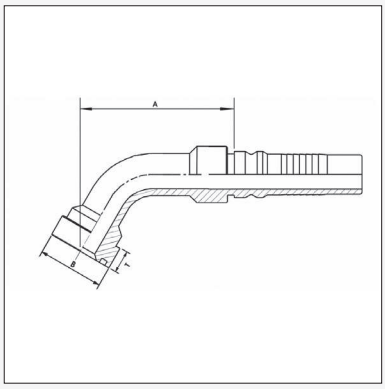

Product Code	Flange			Hose Bore			Dimensions (mm)			
	Bore	Size	ø ins.	DN	Inch	Size	A	øB	T	D
C626-2020I	1.1/4”	20	2.1/8”	32	1.1/4”	20	108	54		55
C626-2424I	1.1/2”	24	2.1/2”	38	1.1/2”	24	136	63.5		68

C626C
6000 PSI SUPERCAT
60° ELBOW SUPERCAT FLANGE

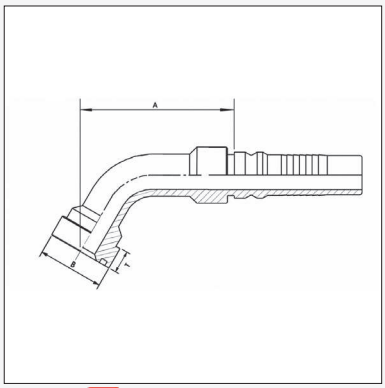

Product Code	Flange			Hose Bore			Dimensions (mm)			
	Bore	Size	ø ins.	DN	Inch	Size	A	øB	T	D
C626C-1212I	3/4”	12	1.5/8”	20	3/4”	12	81	41.3	14.2	50
C626C-1612I	1”	16	1.7/8”	20	3/4”	12	85	47.6	14.2	51
C626C-1616I	1”	16	1.7/8”	25	1”	16	109.5	47.6	14.2	59
C626C-2016I	1.1/4”	20	2.1/8”	25	1”	16	110.5	54	14.2	59.5
C626C-2020I	1.1/4”	20	2.1/8”	32	1.1/4”	20	124.7	54	14.2	61
C626C-2420I	1.1/2”	24	2.1/2”	32	1.1/4”	20	132.2	63.5	14.2	65.5
C626C-2424I	1.1/2”	24	2.1/2”	38	1.1/2”	24	154.5	63.5	14.2	65

PIRTEK

This page is part of a complete catalogue containing technical and safety data.
All data must be reviewed when selecting a product.
Pirtek reserve the right to change technical specifications without notice

SAE FLANGES
ORIGIN: NORTH AMERICA

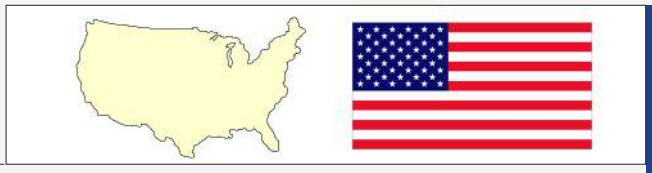

C627C
6000 PSI SUPERCAT
67° ELBOW SUPERCAT FLANGE

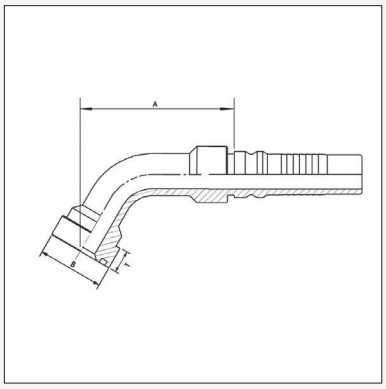

Product Code	Flange			Hose Bore			Dimensions (mm)			
	Bore	Size	ø ins.	DN	Inch	Size	A	øB	T	D
C627C-1616I	1”	16	1.7/8”	25	1”	16	108.5	47.6	14.2	60
C627C-2020I	1.1/4”	20	2.1/8”	32	1.1/4”	20	123.5	54	14.2	63

C629
6000 PSI CODE 62
STANDARD AND LONG DROP 90° ELBOW FLANGES

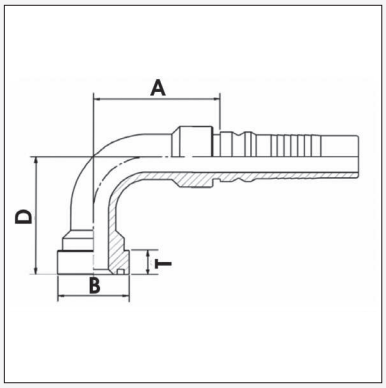

Product Code	Flange			Hose Bore			Dimensions (mm)			
	Bore	Size	ø ins.	DN	Inch	Size	A	øB	T	D
C629-1616I	1”	16	1.7/8”	25	1”	16	73	47.6	9.53	66
C629-2016I	1.1/4”	20	2.1/8”	25	1”	16	76	54	10.29	80
C629-2020I	1.1/4”	20	2.1/8”	32	1.1/4”	20	97	54	10.29	86
C629-2020I-100	1.1/4”	20	2.1/8”	32	1.1/4”	20	97.7	54	10.29	100
C629-2020I-150	1.1/4”	20	2.1/8”	32	1.1/4”	20	97.7	54	10.29	150
C629-2420I	1.1/2”	24	2.1/2”	32	1.1/4”	20	99.5	63.5	12.57	97
C629-2420I-135	1.1/2"	24	2.1/2"	32	1.1/4"	20	99.5	63.5	12.57	135
C629-2024I	1.1/4"	20	2.1/8"	38	1.1/2"	24	116.5	54	10.29	113
C629-2424I	1.1/2”	24	2.1/2”	38	1.1/2”	24	108.5	63.5	12.57	104
C629-3224I	2”	32	3.1/8”	38	1.1/2”	24	115.5	79.4	12.57	119.5
C629-3232I	2”	32	3.1/8”	50	2”	32	145	79.4	12.57	134
C629BS-3232I-155	2"	32	3.1/8"	50	2"	32	143	79.4	12.57	155
C629EHL-3232I-150 †	2”	32	3.1/8”	50	2”	32	173.2	79.4	12.57	150

† Use of Hose Guard **HG-32** and Boot **EHB-032** is recommended in conjunction. See page G76
These Extra Heavy fittings require also Ferrule **IFEH-32I** and 2 O-Rings **YEH-32** (as a seal on the tail)

SAE FLANGES

ORIGIN: NORTH AMERICA

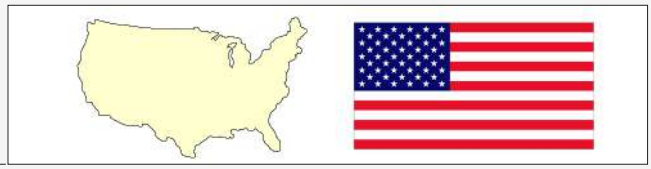

C629C

6000 PSI SUPERCAT

90° ELBOW SUPERCAT FLANGE

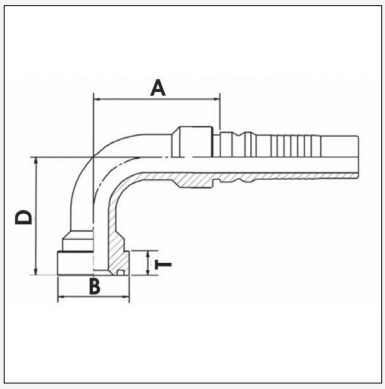

Product Code	Flange			Hose Bore			Dimensions (mm)			
	Bore	Size	ø ins.	DN	Inch	Size	A	øB	T	D
C629C-2020I	1.1/4"	20	2.1/8"	32	1.1/4"	20	97	54	14.2	90
C629C-2420I	1.1/2"	24	2.1/2"	32	1.1/4"	20	99.9	63.5	14.2	99
C629C-2424I	1.1/2"	24	2.1/2"	38	1.1/2"	24	108.5	63.5	14.2	106

C629EHTF

6000 PSI EXTRA HEAVY

90° ELBOW TAPERED FLANGE

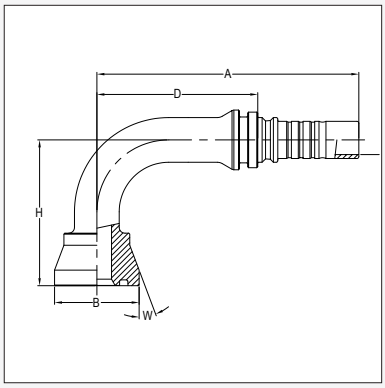

Product Code	Flange			Hose Bore			Dimensions (mm)			
	Bore	Size	ø ins.	DN	Inch	Size	D	øB	A	H
C629EHTF-3232I †	2"	32	3.1/8"	50	2"	32	165	83.5	273	180

† Use of Hose Guard and Boot **HG-032** and **EHB-032** is recommended in conjunction. See page G76

These Extra Heavy fittings require also Ferrule **IFEH-32I** and 2 O-Rings **YEH-32** (as a seal on the tail)

The appropriate flange clamp is designated **AFTF6-32** (see page D83)

DSF1†

METRIC DKS
STRAIGHT FEMALE (WATERBLAST APPLICATIONS)

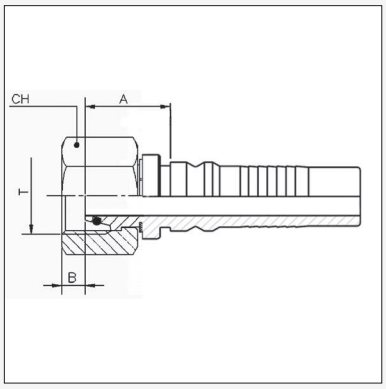

Product Code	Metric Thread			Hose Bore			Dimensions (mm)			
	Thread	Size	Tube	DN	Inch	Size	A	B	CH	
DSF1-2408WBI	M24 x 1.5	24	16 S	12	1/2"	08	31	3	30	
DSF1-3612WBI	M36 x 2	36	25 S	20	3/4"	12	42	3	46	

† These fittings are for fitment to waterblast hose **WB2 & WB3** in combination with **IFSWB** Ferrules

NM1†

NPTF MALE STRAIGHT

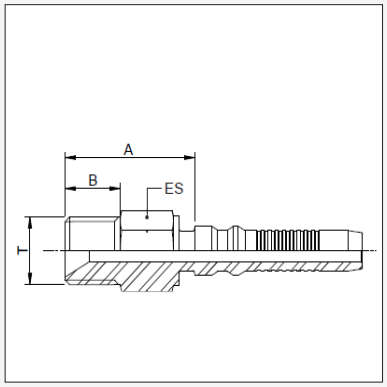

"Product Code"	NPT Thread			Nominal ID			Dimensions (mm)		
	T	Size	Pipe	DN	Inch	Size	A	B	ES
NM1-0808WBI	1/2" - 14	08	1/4"	12	1/2"	08	44.5	19.0	22

† These fittings are for fitment to waterblast hose **WB2 & WB3** in combination with **IFSWB** Ferrules

SAE FLANGES

ORIGIN: NORTH AMERICA

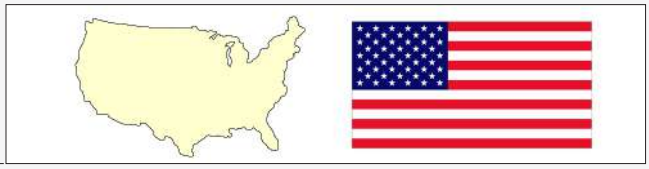

93200 / 93400 / 95400

3000 PSI CODE 61
STRAIGHT FLANGE

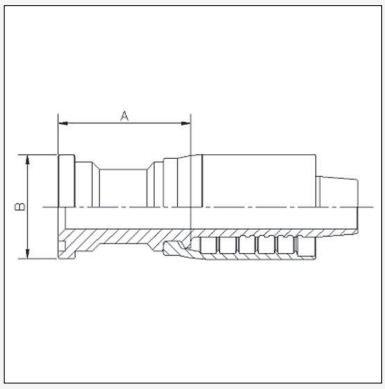

Product Code	Flange			Hose Bore			Dimensions (mm)		
	Bore	Size	ø ins.	DN	Inch	Size	A	øB	
932003240	2½"	40	3.5/16"	50	2"	32	152	84.1	
954004040	2½"	40	3.5/16"	62	2½"	40	81	84.1	
954004048	3"	48	4"	62	2½"	40	84	101.6	
934004848	3"	48	4"	76	3"	48	65	101.6	

95402

3000 PSI CODE 61
22½° ELBOW FLANGE

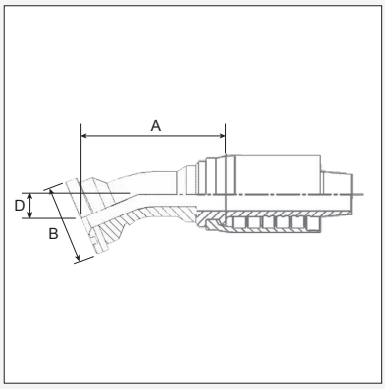

Product Code	Flange			Hose Bore			Dimensions (mm)			
	Bore	Size	ø ins.	DN	Inch	Size	A	øB	D	
954024040	2½"	40	3.5/16"	62	2½"	40	113	84.1	18	
954024048	3"	48	4"	62	2½"	40	115	101.6	16	

93403 / 95403

3000 PSI CODE 61
30° ELBOW FLANGE

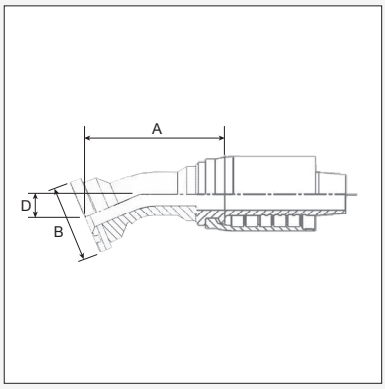

Product Code	Flange			Hose Bore			Dimensions (mm)		
	Bore	Size	ø ins.	DN	Inch	Size	A	øB	D
954034040	2½"	40	3.5/16"	62	2½"	40	122	84.1	27
954034048	3"	48	4"	62	2½"	40	123	101.6	27
934034848	3"	48	4"	76	3"	48	171	101.6	39

PIRTEK

This page is part of a complete catalogue containing technical and safety data.
All data must be reviewed when selecting a product.
Pirtek reserve the right to change technical specifications without notice

SAE FLANGES
ORIGIN: NORTH AMERICA

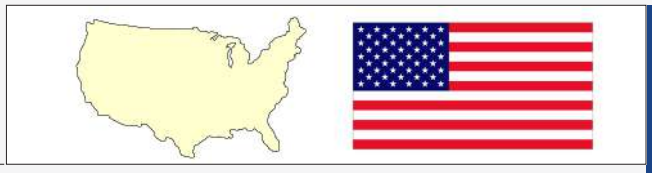

93204 / 93404 / 95404
3000 PSI CODE 61
45° ELBOW FLANGE

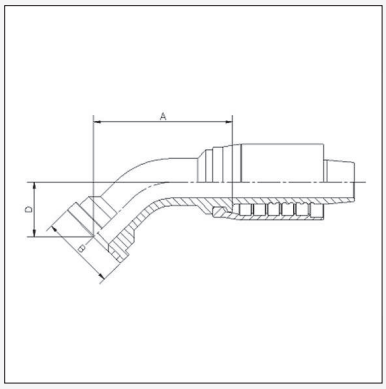

Product Code	Flange			Hose Bore			Dimensions (mm)		
	Bore	Size	ø ins.	DN	Inch	Size	A	øB	D
954044040	2½"	40	3.5/16"	62	2½"	40	136	84.1	47
954044048	3"	48	4"	62	2½"	40	137	101.6	47
934044848	3"	48	4"	76	3"	48	187	101.6	67

93406 / 95406
3000 PSI CODE 61
60° ELBOW FLANGE

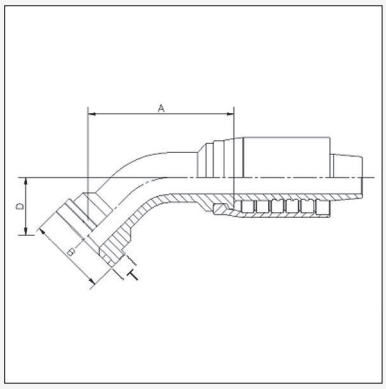

Product Code	Flange			Hose Bore			Dimensions (mm)		
	Bore	Size	ø ins.	DN	Inch	Size	A	øB	D
954064040	2½"	40	3.5/16"	62	2½"	40	169	84.1	71
954064048	3"	48	4"	62	2½"	40	168	101.6	71
934064848	3"	48	4"	76	3"	48	193	101.6	96

95407
3000 PSI CODE 61
67½° ELBOW FLANGE

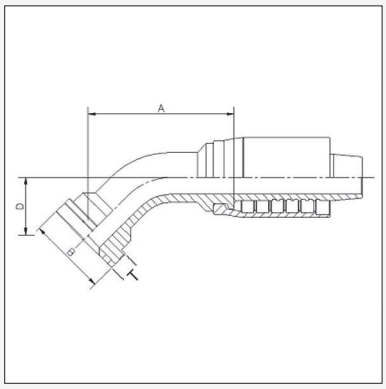

Product Code	Flange			Hose Bore			Dimensions (mm)			
	Bore	Size	ø ins.	DN	Inch	Size	A	øB	D	
954074040	2½"	40	3.5/16"	62	2½"	40	158	84.1	83	
954074048	3"	48	4"	62	2½"	40	158	101.6	83	

SAE FLANGES

ORIGIN: NORTH AMERICA

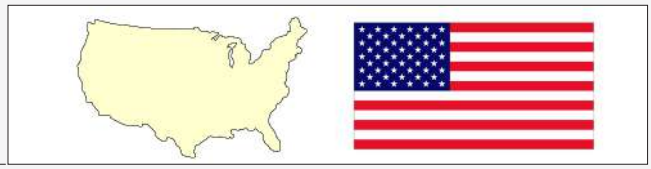

93409 / 95409

3000 PSI CODE 61

90° ELBOW FLANGE

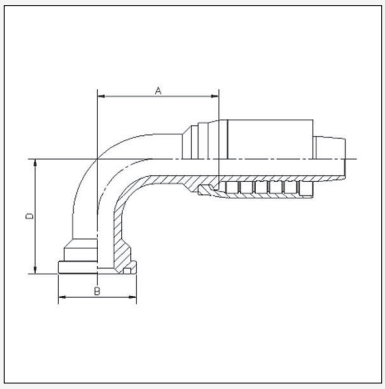

Product Code	Flange			Hose Bore			Dimensions (mm)		
	Bore	Size	ø ins.	DN	Inch	Size	A	øB	D
954094040	2½"	40	3.5/16"	62	2½"	40	141	84.1	119
954094048	3"	48	4"	62	2½"	40	141	101.6	119
934094848	3"	48	4"	76	3"	48	201	101.6	162

This page is part of a complete catalogue containing technical and safety data.
All data must be reviewed when selecting a product.
Pirtek reserve the right to change technical specifications without notice

BSP
ORIGIN: GREAT BRITAIN

BF1
BSPP FEMALE STRAIGHT (FERRULE SUPPLIED)

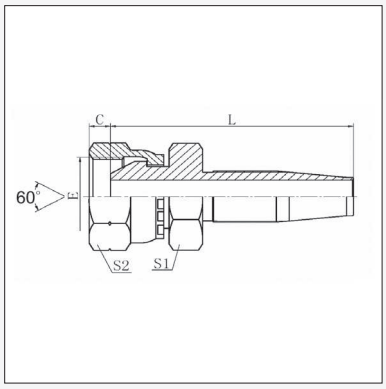

Product Code	BSPP Thread			100R5 Bore			Dimensions mm			
	T	Size	Pipe	DN	Inch	Size	L	C	S1	S2
BF1-0404A	1/4" - 19	04	1/4"	5	3/16"	04	44	5.5	14	19
BF1-0606A	3/8" - 19	06	3/8"	8	5/16"	06	52.5	6.3	17	22
BF1-0808A	1/2" - 14	08	1/2"	10	13/32"	08	61	7.5	19	27
BF1-1212A	3/4" - 14	12	3/4"	16	5/8"	12	78	10.9	27	32
BF1-1616A	1" - 11	16	1"	22	7/8"	16	68.5	11.7	32	41
BF1-2020A	1.1/4" - 11	20	1¼"	32	1.1/8"	20				
BF1-2424A	1.1/2" - 11	24	1½"	38	1.3/8"	24				
BF1-3232A	2" - 11	32	2"	50	1.13/16"	32				

BTM1
BSPT MALE STRAIGHT (FERRULE SUPPLIED)

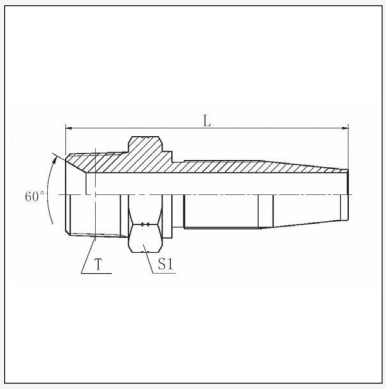

Product Code	BSPT Thread			100R5 Bore			Dimensions mm			
	T	Size	Pipe	DN	Inch	Size	L	S1		
BTM1-0404A	1/4" - 19	04	1/4"	5	3/16"	04				
BTM1-0606A	3/8" - 19	06	3/8"	8	5/16"	06				
BTM1-0808A	1/2" - 14	08	1/2"	10	13/32"	08				
BTM1-1212A	3/4" - 14	12	3/4"	16	5/8"	12				
BTM1-1616A	1" - 11	16	1"	22	7/8"	16				

NPT
ORIGIN: NORTH AMERICA

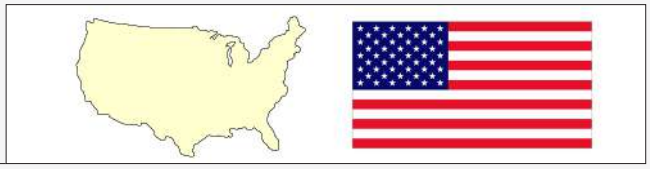

NM1
NPT MALE STRAIGHT (FERRULE SUPPLIED)

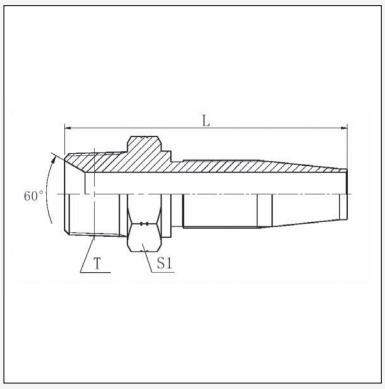

Product Code	NPT Thread			100R5 Bore			Dimensions mm			
	T	Size	Pipe	DN	Inch	Size	L	S1		
NM1-0204A	1/8” - 27	02	1/8”	5	3/16”	04	45.5	12		
NM1-0404A	1/4” - 18	04	1/4”	5	3/16”	04	50	17		
NM1-0405A	1/4” - 18	04	1/4”	6	1/4"	05	49.8	17		
NM1-0406A	1/4" - 18	04	1/4"	8	5/16"	05		17		
NM1-0606A	3/8” - 18	06	3/8”	8	5/16”	06	58	19		
NM1-0808A	1/2” - 14	08	1/2”	10	13/32”	08	69.3			
NM1-1212A	3/4” - 14	12	3/4”	16	5/8”	12	72.5	30		
NM1-1616A	1” - 11.5	16	1”	22	7/8”	16	79.5	36		
NM1-2020A	1.1/4” - 11.5	20	1.1/4”	28	1.1/8”	20	87.5	46		
NM1-2424A	1.1/2” - 11.5	24	1.1/2”	35	1.3/8”	24	93.5	50		

This page is part of a complete catalogue containing technical and safety data.
All data must be reviewed when selecting a product.
Pirtek reserve the right to change technical specifications without notice

JIC FITTINGS
ORIGIN: NORTH AMERICA

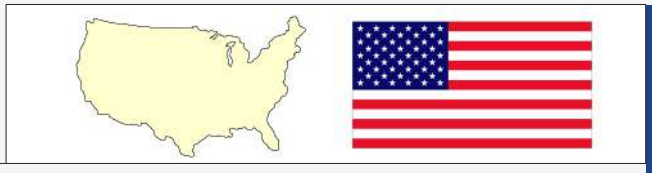

JF1
JIC FEMALE STRAIGHT (FERRULE SUPPLIED)

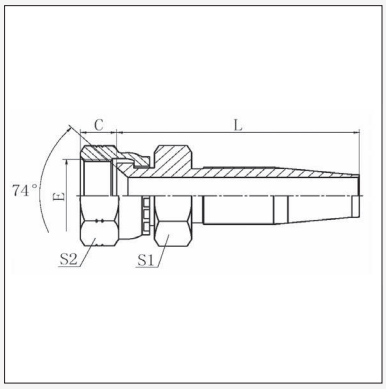

Product Code	JIC Thread			Hose Bore			Dimensions (mm)			
	Thread	Size	Tube	DN	Inch	Size	L	C	S1	S2
JF1-0704A	7/16" - 20	07	04	5	3/16"	04	40	9	14	17
JF1-0805A	1/2" - 20	08	05	6	1/4"	05	45	9.5	14	17
JF1-0906A	9/16" - 18	09	06	8	5/16"	06	49	10.5	17	19
JF1-1208A	3/4" - 16	12	08	10	13/32"	08	60	11	22	24
JF1-1210A	3/4" - 16	12	08	12	1/2"	10	65	11	27	24
JF1-1410A	7/8" - 14	14	10	12	1/2"	10	66.5	13	27	27
JF1-1712A	1.1/16" - 12	17	12	16	5/8"	12	77	15	32	32
JF1-2116A	1.5/16" - 12	21	16	22	7/8"	16	64	16	38	41
JF1-2620A	1.5/8" - 12	26	20	28	1.1/8"	20	76.5	17	41	50
JF1-3024A	1.7/8" - 12	30	24	35	1.3/8"	24	79.5	20	46	55
JF1-4032A	2.1/2" - 12	40	32	46	1.13/16"	32	95	23.5	65	75

JF4
JIC FEMALE 45° ELBOW (FERRULE SUPPLIED)

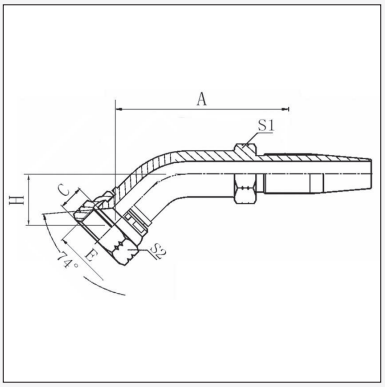

Product Code	JIC Thread			Hose Bore			Dimensions (mm)				
	Thread	Size	Tube	DN	Inch	Size	A	C	H	S1	S2
JF4-0704A	7/16" - 20	07	04	5	3/16"	04	27.9	9	8.4	14	15
JF4-0906A	9/16" - 18	09	06	8	5/16"	06	33.8		9.9		
JF4-1208A	3/4" - 16	12	08	10	13/32"	08	46.7	11	14.0	19	24
JF4-1410A	7/8" - 14	14	10	12	1/2"	10	49.5	13	16.3	24	27
JF4-1712A	1.1/16" - 12	17	12	16	5/8"	12	56.1		19.8		
JF4-2116A	1.5/16" - 12	21	16	22	7/8"	16	62.7	16	27.2	32	41

JF9 / JFL9
JIC FEMALE 90° ELBOW (FERRULE SUPPLIED)

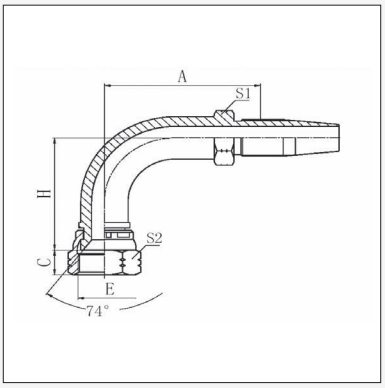

Product Code	JIC Thread			Hose Bore			Dimensions (mm)				
	Thread	Size	Tube	DN	Inch	Size	A	C	H	S1	S2
JF9-0704A	7/16" - 20	07	04	5	3/16"	04	25.1	9	17.3	14	15
JF9-0805A	1/2" - 20	08	05	6	1/4"	05	30.0	9.5	19.6	14	17
JF9-0906A	9/16" - 18	09	06	8	5/16"	06	31.2		21.6		
JF9-0906A-055	9/16" - 18	09	06	8	5/16"	06	31.2		55.4		
JF9-1208A	3/4" - 16	12	08	10	13/32"	08	40.9	11	27.7	19	24
JF9-1208A-061	3/4" - 16	12	08	10	13/32"	08	43.9	11	61.7	19	24
JF9-1210A	3/4" - 16	12	08	12	1/2"	10		11		24	24
JF9-1410A	7/8" - 14	14	10	12	1/2"	10	41.9	13	31.2	24	27
JF9-1410A-065	7/8" - 14	14	10	12	1/2"	10	48.3	13	65.3	24	27
JF9-1712A	1.1/16" - 12	17	12	16	5/8"	12	55.1		46.2		
JF9-2116A	1.5/16" - 12	21	16	22	7/8"	16	57.9	16	60.7	32	41
JF9-2116A-116	1.5/16" - 12	21	16	22	7/8"	16	57.9	16	116.3	28.4	38
JF9-2620A	1.5/8" - 12	26	20	28	1.1/8"	20	67.3	17	69.8	38	50
JF9-3024A	1.7/8" - 12	30	24	35	1.3/8"	24	121	20	97.5	46	55
JF9-4032A	2.1/2" - 12	40	32	46	1.13/16"	32	143.25	23.5	118.8	60	75

PIRTEK

This page is part of a complete catalogue containing technical and safety data.
All data must be reviewed when selecting a product.
Pirtek reserve the right to change technical specifications without notice

SAE FITTINGS
ORIGIN: NORTH AMERICA

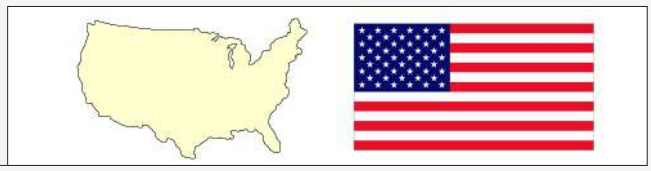

SF1
SAE FEMALE STRAIGHT
(FERRULE SUPPLIED)

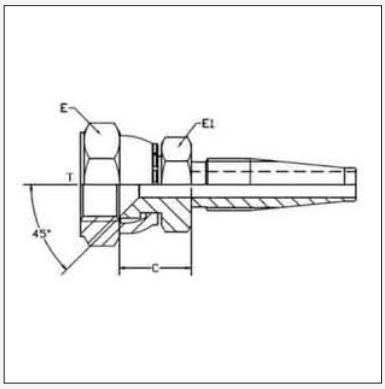

Product Code	SAE Thread			Hose Bore			Dimensions (mm)			
	Thread	Size	Tube	DN	Inch	Size	T	C	E1	E
SF1-1006A	5/8" - 18	10	06	8	5/16"	06	5/8"	15.6	19	19
SF1-1712A	1.1/16" - 14	17	12	16	5/8"	12	1.1/16"		32	32

* Swivel nut thread is SAE, Seat angle is SAE at 45° (90° Inclusive)

SF4
SAE FEMALE 45° ELBOW
(FERRULE SUPPLIED)

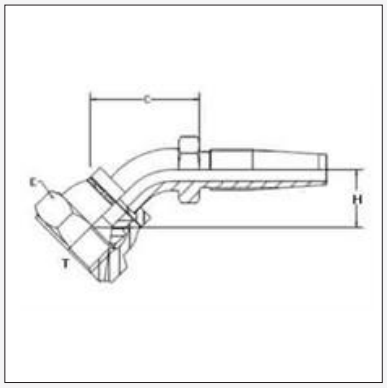

Product Code	SAE Thread			Hose Bore			Dimensions (mm)				
	Thread	Size	Tube	DN	Inch	Size	T	C	H	S1	E
SF4-1006A	5/8" - 18	10	06	8	5/16"	06	5/8"	24.5	10.0	12.7	19

* Swivel nut thread is SAE, Seat angle is SAE at 45° (90° Inclusive)

SF9
SAE FEMALE 90° ELBOW
(FERRULE SUPPLIED)

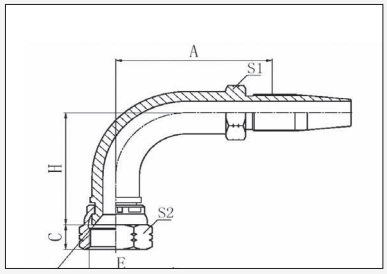

Product Code	SAE Thread			Hose Bore			Dimensions (mm)					
	Thread (E)	Size	Tube	DN	Inch	Size	E	A	C	H	S1	S2
SF9-1006A	5/8" - 18	10	06	8	5/16"	06	5/8"	33	11.3	21.3	12.7	19
SF9-1712A	1.1/16" - 14	17	12	16	5/8"	12	1.1/16"	55.1	18.5	46.2	22.1	31.7

* Swivel nut thread is SAE, Seat angle is SAE at 45° (90° Inclusive)

PIRTEK
This page is part of a complete catalogue containing technical and safety data.
All data must be reviewed when selecting a product.
Pirtek reserve the right to change technical specifications without notice

JIC / ORFS FITTINGS
ORIGIN: NORTH AMERICA

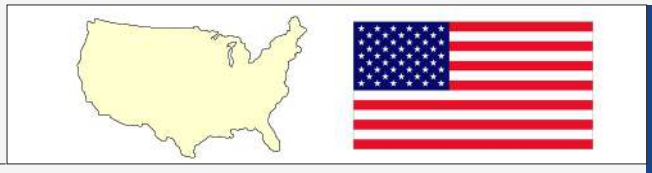

SFB
FERRULE TO SUIT C45 HOSE

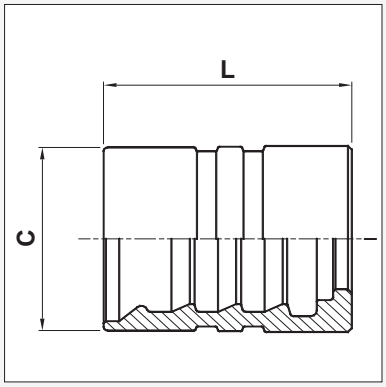

Product Code	To Suit Hose	Hose Bore			Dimensions (mm)			
		DN	Inch	Size	L	C		
SFB-10	C45-10	16	5/8"	10	38	33		

JFI
JIC FEMALE STRAIGHT

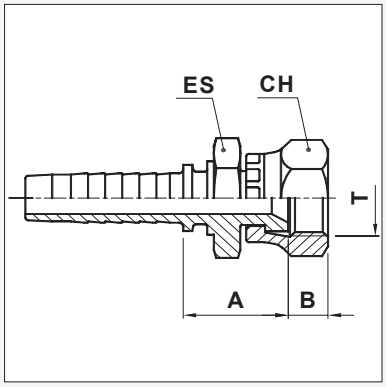

Product Code	JIC Thread			Hose Bore			Dimensions (mm)			
	Thread	Size	Tube	DN	Inch	Size	A	B	CH	ES
JF1-1210B	3/4" - 16	12	8	16	5/8"	10	27.4	10.7	24	22
JF1-1410B	7/8" - 14	14	10	16	5/8"	10	29.8	12.7	27	22

Use in conjunction with Ferrule SFB-10 on C45-10 Hose

OF1
O-RING FACE SEAL FEMALE STRAIGHT

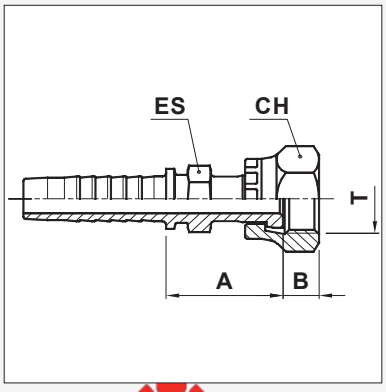

Product Code	UN Thread			Hose Bore			Dimensions (mm)			
	Thread	Size	Tube	DN	Inch	Size	A	B	CH	ES
OF1-1010B	1" - 14	10	10	16	5/8"	10	39	13.5	30	24
OF1-1210B	1.3/16" - 12	12	12	16	5/8"	10	44.0	14.5	36	30

Use in conjunction with Ferrule SFB-10 on C45-10 Hose

ORFS / SAE FLANGE

ORIGIN: NORTH AMERICA

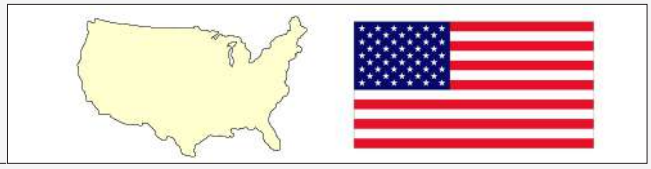

OF9

O-RING FACE SEAL FEMALE 90° ELBOW

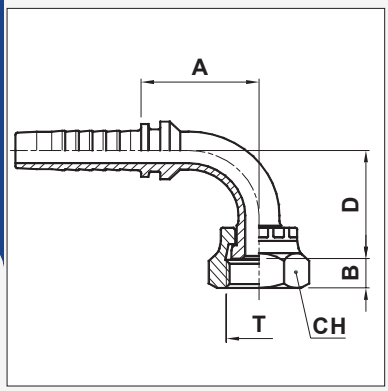

Product Code	UN Thread			Hose Bore			Dimensions (mm)			
	Thread	Size	Tube	DN	Inch	Size	A	B	CH	D
OF9-1010B	1" - 14	10	10	16	5/8"	10	56	13.5	30	51

Use in conjunction with Ferrule SFB-10 on C45-10 Hose

C629

6000 PSI CODE 62

90° ELBOW FLANGE

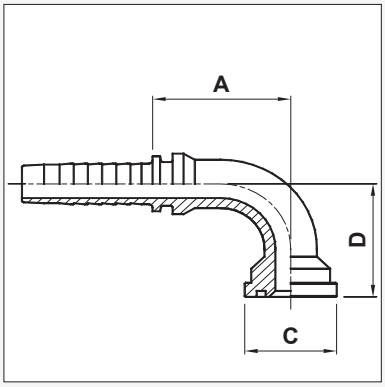

Product Code	Flange			Hose Bore			Dimensions (mm)			
	Bore	Size	ø ins.	DN	Inch	Size	A	C	D	
C629-0810B	1/2"	8	1.3/16"	16	5/8"	10	55	31.7	52	
C629-1210B	3/4"	12	1.1/2"	16	5/8"	10	53.5	41.3	58	

Use in conjunction with Ferrule SFB-10 on C45-10 Hose

PIRTEK fluid transfer solutions

This page is part of a complete catalogue containing technical and safety data.
All data must be reviewed when selecting a product.
Pirtek reserve the right to change technical specifications without notice

BSP
ORIGIN: GREAT BRITAIN

BF1
BSPP FEMALE STRAIGHT

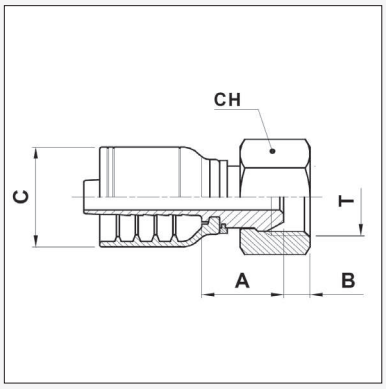

Product Code	BSPP Thread		Nominal ID			Dimensions mm				
	T	Size	Dash	Inch	DN	A	B	CH	C	
BF1-0404R	1/4" - 19	04	04	3/16"	4	16.8	4.2	19	21	
BF1-0405R	1/4" - 19	04	05	1/4"	6	16.8	4.2	19	22	
BF1-0606R	3/8" - 19	06	06	5/16"	08	18.5	6	22	24	
BF1-0808R	1/2" - 14	08	08	13/32"	11	20.5	6.5	27	27	
BF1-0810R	1/2" - 14	08	10	1/2"	12	21	6.5	27	31	
BF1-1212R	3/4" - 14	12	12	5/8"	16	21.5	8.7	32	37	
BF1-1616R	1" - 11	16	16	7/8"	22	28	10.5	38	43	
BF1-2020R	1.1/4" - 11	20	20	1.1/8"	28	36.4	10	50	49	
BF1-2424R	1.1/2" - 11	24	24	1.3/8"	35	36.3	12	55	54	
BF1-3232R	2" - 11	32	32	1.13/16"	46	39	16	70	65	

BF4
BSPP FEMALE 45° ELBOW

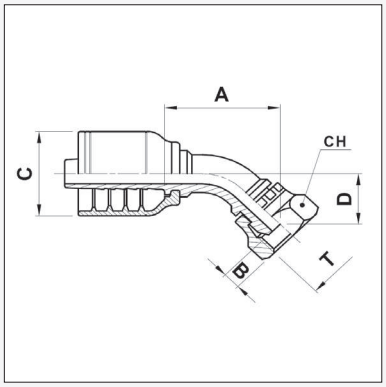

Product Code	BSPP Thread		Nominal ID			Dimensions mm				
	T	Size	Dash	Inch	DN	A	B	CH	C	D
BF4-0606R	3/8" - 19	06	06	5/16"	08	42.5	6	22	24	19

BF9
BSPP FEMALE 90° ELBOW

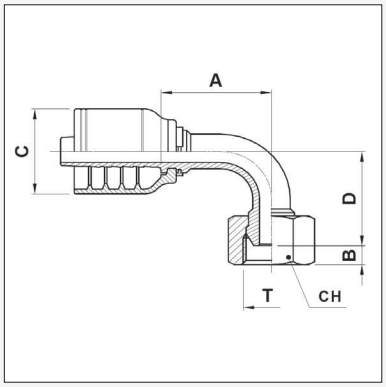

Product Code	BSPP Thread		Nominal ID			Dimensions mm				
	T	Size	Dash	Inch	DN	A	B	CH	C	D
BF9-0404R	1/4" - 19	04	04	3/16"	4	27.5	4.2	19	21	27
BF9-0604R	3/8" - 19	06	04	3/16"	4	27.5	6	22	21	29.5
BF9-0606R	3/8" - 19	06	06	5/16"	08	32.5	6	22	24	30
BF9-0806R	1/2" - 14	08	06	5/16"	08	32.5	6.5	27	24	32
BF9-0808R	1/2" - 14	08	08	13/32"	11	39	6.5	27	27	36.5
BF9-1212R	3/4" - 14	12	12	5/8"	16	62.5	8.7	32	37	58.8
BF9-1616R	1" - 11	16	16	7/8"	22	73	10.5	38	43	71
BF9-2020R	1.1/4" - 11	20	20	1.1/8"	28	91.5	10	50	49	83
BF9-2424R	1.1/2" - 11	24	24	1.3/8"	35	114	12	55	54	108
BF9-3232R	2" - 11	32	32	1.13/16"	46	130	16	70	65	128

BSP
ORIGIN: GREAT BRITAIN

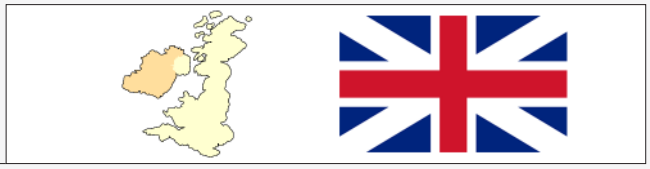

BTM1
BSPT MALE STRAIGHT

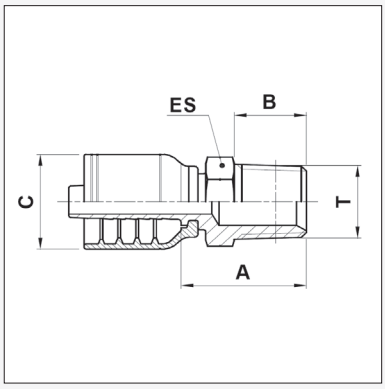

Product Code	BSPT Thread		Nominal ID			Dimensions mm			
	T	Size	Dash	Inch	DN	A	B	C	ES
BTM1-0405R	1/4" - 19	04	05	1/4"	6	26.5	14	22	14
BTM1-0606R	3/8" - 19	06	06	5/16"	08	29	15	24	19
BTM1-0808R	1/2" - 14	08	08	13/32"	11	32	18	27	22
BTM1-0810R	1/2" - 14	08	10	1/2"	12	32.5	18	31	22
BTM1-1212R	3/4" - 14	12	12	5/8"	16	42	20	37	27
BTM1-1616R	1" - 11	16	16	7/8"	22	48.1	23	43	36

This page is part of a complete catalogue containing technical and safety data.
All data must be reviewed when selecting a product.
Pirtek reserve the right to change technical specifications without notice

JIC FITTINGS
ORIGIN: NORTH AMERICA

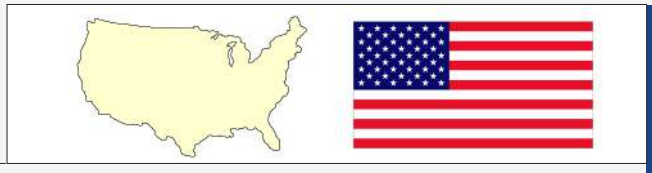

JFI
JIC FEMALE STRAIGHT

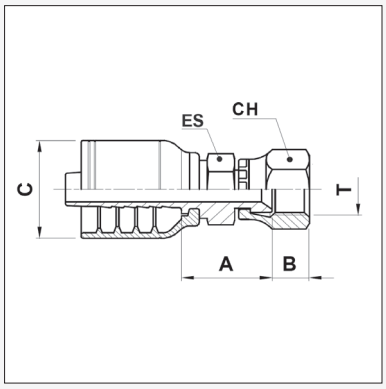

Product Code	JIC Thread			Hose Bore			Dimensions (mm)				
	Thread	Size	Tube	Dash	Inch	DN	A	B	CH	ES	C
JF1-0704R	7/16" - 20	07	04	04	3/16"	4	19.5	8.5	15	11.1	21
JF1-0805R	1/2" - 20	08	05	05	1/4"	5	18.5	10.7	19	24	23
JF1-1205R	3/4" - 16	12	08	05	1/4"	5	24.4	10.2	24	na	23
JF1-0906R	9/16" - 18	09	06	06	5/16"	08	21	9.5	19	14	24
JF1-1206R	3/4" - 16	12	08	06	5/16"	08	25.9	10.7	24	19	24
JF1-1208R	3/4" - 16	12	08	08	13/32"	11	18.5	10.7	24	19	27
JF1-1210R	3/4" - 16	12	08	10	1/2"	12	25.4	10.7	24	19	31
JF1-1410R	7/8" - 14	14	10	10	1/2"	12	20.5	12.5	27	27	31
JF1-1710R	1.1/16" - 12	17	12	10	1/2"	12	35.5	13.8	32	27	31
JF1-1712R †	1.1/16" - 12	17	12	12	5/8"	16	35.5	13.8	32	27	37
JF1-2116R †	1.5/16" - 12	21	16	16	7/8"	22	37	16	38	32	43
JF1-2620R †	1.5/8" - 12	26	20	20	1.1/8"	28	50.1	16	50	41	49
JF1-3024R †	1.7/8" - 12	30	24	24	1.3/8"	35	53.4	18.5	55	50	54
JF1-4032R †	2.1/2" - 12	40	32	32	1.13/16"	48	70	24	75	65	65

† Thrust wired nut

JF4
JIC FEMALE 45° ELBOW

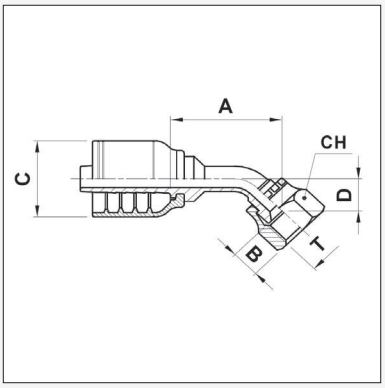

Product Code	JIC Thread			Hose Bore			Dimensions (mm)				
	Thread	Size	Tube	Dash	Inch	DN	A	B	CH	D	C
JF4-0704R	7/16" - 20	07	04	04	3/16"	4	33.6	8.5	15	14.1	21
JF4-0804R	1/2" - 20	08	05	04	3/16"	4	34	10.5	17	14.8	21
JF4-0904R	9/16" - 18	08	05	04	3/16"	4	32.5	9.5	19	13.7	21
JF4-0906R	9/16" - 18	09	06	06	5/16"	08	30.9	9.5	19	11.5	24
JF4-1206R	3/4" - 16	12	08	06	5/16"	08	37.7	10.7	24	15	24
JF4-1208R	3/4" - 16	12	08	08	13/32"	11	42.5	10.7	24	14.5	27
JF4-1408R	7/8" - 14	14	10	08	13/32"	11	50.5	12.5	27	19.4	27
JF4-1410R	7/8" - 14	14	10	10	1/2"	12	48.5	12.5	27	21.2	31
JF4-1710R	1.1/16" - 12	17	12	10	1/2"	12	59	13.8	32	26	31
JF4-1712R †	1.1/16" - 12	17	12	12	5/8"	16	60.5	14.3	32	22	37
JF4-2112R †	1.5/16" - 12	21	16	12	5/8"	16		16	38		37
JF4-2116R †	1.5/16" - 12	21	16	16	7/8"	22	91.5	16	38	32.2	43
JF4-2620R †	1.5/8" - 12	26	20	20	1.1/8"	28	91.7	16	50	39.2	49
JF4-3024R †	1.7/8" - 12	30	24	24	1.3/8"	35	130	18.5	55	49.2	54
JF4-4032R †	2.1/2" - 12	40	32	32	1.13/16"	46	173	24	75	68.2	65

† Thrust wired nut

JIC FITTINGS

ORIGIN: NORTH AMERICA

JF9

JIC FEMALE 90° ELBOW

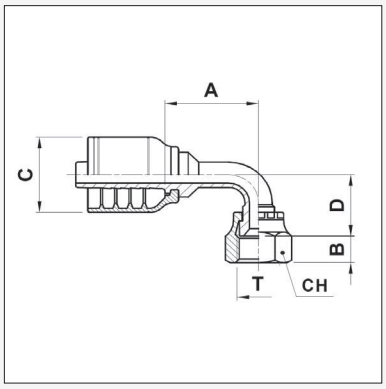

Product Code	JIC Thread			Hose Bore			Dimensions (mm)				
	Thread	Size	Tube	Dash	Inch	DN	A	B	CH	D	C
JF9-0704R	7/16" - 20	07	04	04	3/16"	5	24	8.5	15	29	21
JF9-0804R	1/2" - 20	08	05	04	3/16"	5	32	10.5	17	29	21
JF9-0805R	1/2" - 20	08	05	05	1/4"	6	26.5	10.5	17	29	21
JF9-0906R	9/16" - 18	09	06	06	5/16"	08	30	9.5	19	22	24
JF9-0906R-056	9/16" - 18	09	06	06	5/16"	08	35.5	9.5	19	56	24
JF9-1208R	3/4" - 16	12	08	08	13/32"	11	31.5	10.7	24	30	27
JF9-1210R	3/4" - 16	12	08	10	1/2"	12	41	10.7	24	30	31
JF9-1410R	7/8" - 14	14	10	10	1/2"	12	42.5	12.5	27	40	31
JF9-1712R	1.1/16" - 12	17	12	12	5/8"	16	56	14.3	32	48	37
JF9-1712R-095	1.1/16" - 12	17	12	12	5/8"	16	55.5	13.8	32	95	37
JF9-2116R	1.5/16" - 12	21	16	16	7/8"	22	76	16	38	77	43
JF9-2116R-060	1.5/16" - 12	21	16	16	7/8"	22	63	16.5	38	60	43
JF9-2620R	1.5/8" - 12	26	20	20	1.1/8"	28	79	16	50	79.5	49
JF9-3024R	1.7/8" - 12	30	24	24	1.1/2"	38	107	18.5	55	103.7	54
JF9-4032R	2.1/2" - 12	40	32	32	1.13/16"	46	136	24	75	140	65

PIRTEK

This page is part of a complete catalogue containing technical and safety data.
All data must be reviewed when selecting a product.
Pirtek reserve the right to change technical specifications without notice

SAE / NPT
ORIGIN: NORTH AMERICA

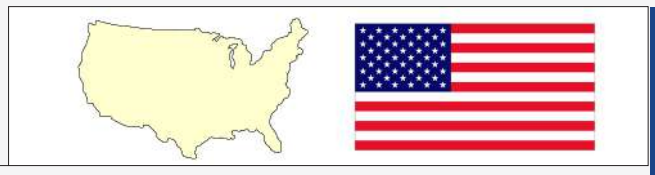

SF1
SAE FEMALE STRAIGHT

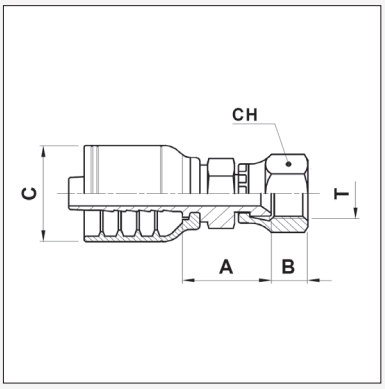

Product Code	SAE Thread			Hose Bore			Dimensions (mm)				
	Thread	Size	Tube	Dash	Inch	DN	A	B	CH	ES	C
SF1-1006R	5/8" - 18	10	06	06	5/16"	08	23.9	10.8	22	19	24
SF1-1712R	1.1/16" - 14	17	12	12	5/8"	16	30.7	14.4	32	27	37

NM1
NPT MALE STRAIGHT

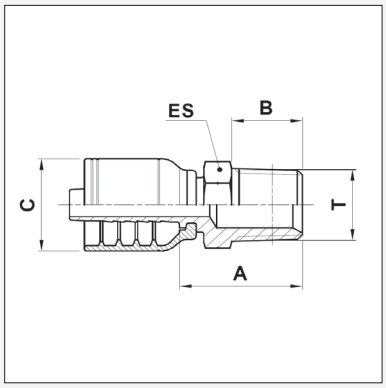

Product Code	NPT Thread		Nominal ID			Dimensions mm				
	T	Size	Dash	Inch	DN	A	B	ES	C	
NM1-0404R	1/4" - 18	04	04	3/16"	5	25.8	14	14	21	
NM1-0606R	3/8" - 18	06	06	5/16"	08	28	14	19	24	
NM1-0808R	1/2" - 14	08	08	13/32"	11	33	19	22	27	
NM1-1212R	3/4" - 14	12	12	5/8"	16	41	19	27	37	
NM1-1616R	1" - 11½	16	16	7/8"	22	47.5	24	36	43	
NM1-2424R	1.1/2" - 11.1/2	24	24	1.3/8"	35	60.5	25.5	50	54	

ORFS FITTINGS

ORIGIN: NORTH AMERICA

OF1

O-RING FACE SEAL FEMALE STRAIGHT

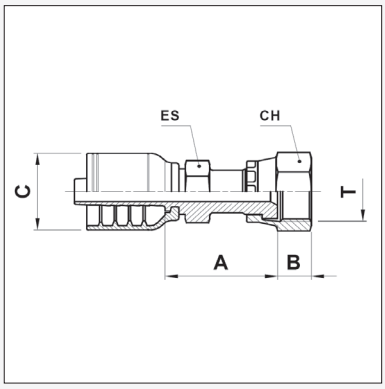

Product Code	UN Thread			Hose Bore			Dimensions (mm)				
	Thread	Size	Tube	Dash	Inch	DN	A	B	CH	ES	C
OF1-0404R	9/16" - 18	04	04	04	3/16"	4	27.3	8	17	14	21
OF1-0606R	11/16" - 16	06	06	06	5/16"	08	32	9.5	22	17	24
OF1-0806R	13/16" - 16	08	08	06	5/16"	08	36.5	11	24	19	24
OF1-0808R	13/16" - 16	08	08	08	13/32"	11	36.5	11	24	19	27
OF1-0810R	13/16"-16	08	08	10	1/2"	12	37	11	24	19	31
OF1-1010R	1" - 14	10	10	10	1/2"	12	39	13.5	30	24	31
OF1-1212R	1.3/16" - 12	12	12	12	5/8"	16	44	14.5	36	30	37
OF1-1616R	1.7/16" - 12	16	16	16	7/8"	22	52.5	14.8	41	36	43

OF4

O-RING FACE SEAL FEMALE 45° ELBOW

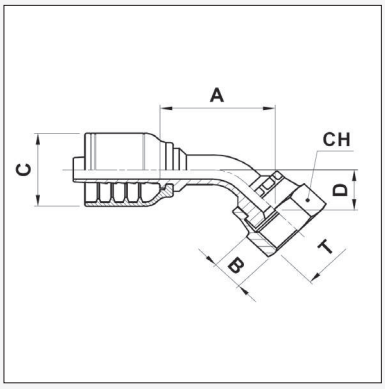

Product Code	UN Thread			Hose Bore			Dimensions (mm)				
	Thread	Size	Tube	Dash	Inch	DN	A	B	CH	D	C
OF4-0404R	9/16" - 18	04	04	04	3/16"	4	43.5	8	17	11	21
OF4-0606R	11/16" - 16	06	06	06	5/16"	08	38	9.5	22	15	24
OF4-0808R	13/16" - 16	08	08	08	13/32"	11	43.5	11	24	15	27
OF4-0810R	13/16"-16	08	08	10	1/2"	12	43	11	24	14.3	31
OF4-1212R	1.3/16" - 12	12	12	12	5/8"	16	63	14.5	36	24	37
OF4-1616R	1.7/16" - 12	16	16	16	7/8"	22	82.5	14.8	41	31	43

OF9

O-RING FACE SEAL FEMALE 90° ELBOW

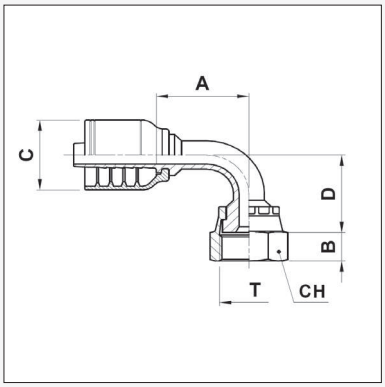

Product Code	UN Thread			Hose Bore			Dimensions (mm)				
	Thread	Size	Tube	Dash	Inch	DN	A	B	CH	D	C
OF9-0404R	9/16" - 18	04	04	04	3/16"	4	29.5	8	17	25	21
OF9-0606R	11/16" - 16	06	06	06	5/16"	08	34	9.5	22	27	24
OF9-0808R	13/16" - 16	08	08	08	13/32"	11	33	11	24	30	27
OF9-0810R	13/16"-16	08	08	10	1/2"	12	29.5	11	24	44.5	31
OF9-1010R	1" - 14	10	10	10	1/2"	12	44	13.5	30	40	31
OF9-1212R	1.3/16" - 12	12	12	12	5/8"	16	56.5	14.5	36	51.5	37
OF9-1616R	1.7/16" - 12	16	16	16	7/8"	22	71.5	14.8	41	71	43

This page is part of a complete catalogue containing technical and safety data.
All data must be reviewed when selecting a product.
Pirtek reserve the right to change technical specifications without notice

BSP
ORIGIN: GREAT BRITAIN

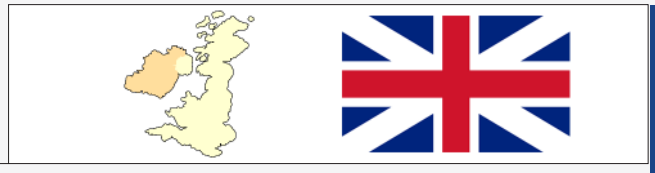

BF1
BSPP FEMALE STRAIGHT PUSH FIT

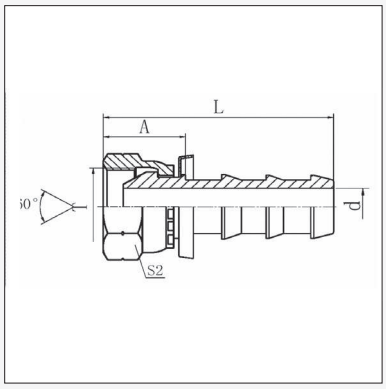

Product Code	BSPP Thread			Hose Bore			Dimensions mm			
	T	Size	Pipe	DN	Inch	Size	L	C	S1	S2
BF1-0204P	1/8" - 28	02	1/8"	6	1/4"	04		4.3		
BF1-0404P	1/4" - 19	04	1/4"	6	1/4"	04	19.5	4.3	37.5	19
BF1-0406P	1/4" - 19	04	1/4"	10	3/8"	06	19.5	7.6		19
BF1-0606P	3/8" - 19	06	3/8"	10	3/8"	06	21.5	7.6	43.0	22
BF1-0806P	1/2" - 14	08	1/2"	10	3/8"	06	24.5	7.6		27
BF1-0608P	3/8" - 19	06	3/8"	12	1/2"	08	21.5	9.9		22
BF1-0808P	1/2" - 14	08	1/2"	12	1/2"	08	24.5	9.9	50	27
BF1-0810P	1/2" - 14	08	1/2"	16	5/8"	10	24.5			27
BF1-1212P	3/4" - 14	12	3/4"	20	3/4"	12	29.0	15.5	67.5	32
BF1-1616P	1" - 11	16	1"	25	1"	16				

* Available in Stainless Steel, add SS to part number eg BF1SS-0404P

BFC9
BSP FEMALE PUSH FIT 90° COMPACT ELBOW

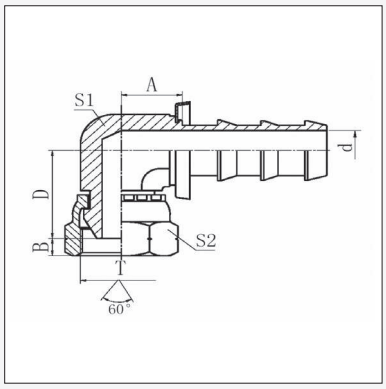

Product Code	BSPP Thread			Hose Bore			Dimensions mm					
	T	Size	Pipe	DN	Inch	Size	A	B	D	S1	S2	d
BFC9-0404P	1/4" - 19	04	1/4"	6	1/4"	04	12.0	5.5	18.5	11	19	4.3
BFC9-0606P	3/8" - 19	06	3/8"	10	3/8"	06	14.0	6.3	24.0	14	22	7.6
BFC9-0808P	1/2" - 14	08	1/2"	12	1/2"	08	17.0	7.5	26.5	19	27	9.9
BFC9-1212P	3/4" - 14	12	3/4"	20	3/4"	12	21.5	10.9	33.0	27	32	15.5

BPM1
BSPP MALE STRAIGHT PUSH FIT

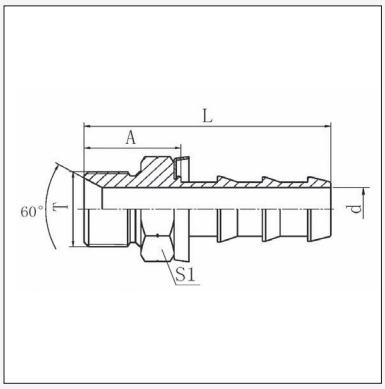

Product Code	BSPP Thread			Hose Bore			Dimensions mm			
	T	Size	Pipe	DN	Inch	Size	A	L	S1	d
BPM1-0808P	1/2" - 14	08	1/2"	12	1/2"	08	28.5	54	27	9.9

BSP
ORIGIN: GREAT BRITAIN

BTM1
BSPT MALE STRAIGHT PUSH FIT

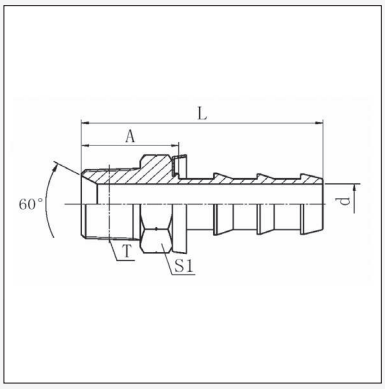

Product Code	BSPT Thread			Hose Bore			Dimensions mm			
	T	Size	Pipe	DN	Inch	Size	A	L	S1	d
BTM1-0204P	1/8” - 28	02	1/8”	6	1/4”	04	17.7	37.5	12	4.5
BTM1-0404P	1/4” - 19	04	1/4”	6	1/4”	04	20.5	40.5	14	4.3
BTM1-0406P	1/4” - 19	04	1/4”	10	3/8”	06	22	44	17	7.5
BTM1-0606P	3/8” - 19	06	3/8”	10	3/8”	06	23.5	49	19	7.5
BTM1-0806P	1/2” - 14	08	1/2”	10	3/8”	06				
BTM1-0608P	3/8” - 19	06	3/8”	12	1/2”	08				
BTM1-0808P	1/2” - 14	08	1/2”	12	1/2”	08	30.5	56	22	9.9
BTM1-0810P	1/2” - 14	08	1/2”	16	5/8”	10				
BTM1-1212P	3/4” - 14	12	3/4”	20	3/4”	12	29.4	68	30	15.5

PIRTEK

This page is part of a complete catalogue containing technical and safety data.
All data must be reviewed when selecting a product.
Pirtek reserve the right to change technical specifications without notice

NPT
ORIGIN: NORTH AMERICA

NM1
NPT MALE STRAIGHT PUSH FIT

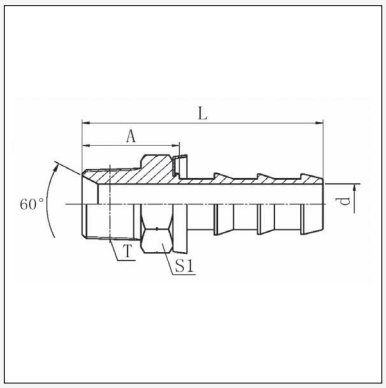

Product Code	NPT Thread			Hose Bore			Dimensions mm			
	T	Size	Pipe	DN	Inch	Size	A	L	S1	d
NM1-0204P	1/8" - 27	02	1/8"	6	1/4"	04	16.5	35.6	11	4.3
NM1-0404P	1/4" - 18	04	1/4"	6	1/4"	04	21.1	40.1	14	4.3
NM1-0406P	1/4" - 18	04	1/4"	10	3/8"	06	22.6	44.7	14	7.6
NM1-0606P	3/8" - 18	06	3/8"	10	3/8"	06	22.6	44.7	19	7.6
NM1-0608P	3/8" - 18	06	3/8"	12	1/2"	08	22.6	48.5	19	9.9
NM1-0808P	1/2" - 14	08	1/2"	12	1/2"	08	29	54.9	22	9.9
NM1-1212P	3/4" - 14	12	3/4"	20	3/4"	12	30.7	69	27	15.5

JIC
ORIGIN: NORTH AMERICA

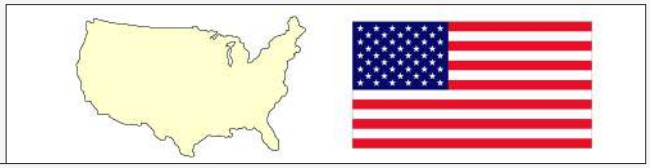

JF1
JIC FEMALE STRAIGHT
PUSH FIT

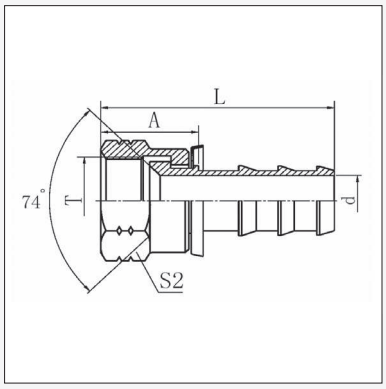

Product Code	JIC Thread			Hose Bore			Dimensions (mm)			
	Thread	Size	Tube	DN	Inch	Size	A	L	S2	d
JF1-0704P	7/16" - 20	07	04	6	1/4"	04	20	38	15	4.3
JF1-0804P	1/2" - 20	08	05	6	1/4"	04	21	39	17	4.3
JF1-0904P	9/16" - 18	09	06	6	1/4"	04				4.3
JF1-0906P	9/16" - 18	09	06	10	3/8"	06	22	43.5	19	7.6
JF1-1206P	3/4" - 16	12	08	10	3/8"	06	25	46.5	24	7.6
JF1-1208P	3/4" - 16	12	08	12	1/2"	08	25	50.5	24	9.9
JF1-1408P	7/8" - 14	14	10	12	1/2"	08	27	52.5	27	9.9
JF1-1410P	7/8" - 14	14	10	16	5/8"	10				
JF1-1710P	1.1/16" - 12	17	12	16	5/8"	10				
JF1-1712P	1.1/16" - 12	17	12	20	3/4"	12	31	69.5	32	15.5
JF1-2116P	1.5/16" - 12	21	16	25	1"	16				

Add BR for Brass version or SS for stainless steel Example: JF1BR-0704P

JFC9
JIC FEMALE 90° COMPACT ELBOW
PUSH FIT

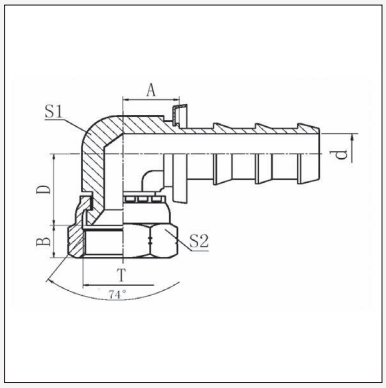

Product Code	JIC Thread			Hose Bore			Dimensions (mm)				
	Thread	Size	Tube	DN	Inch	Size	A	B	D	S1	S2
JFC9-0704P	7/16" - 20	07	04	6	1/4"	04	12	9	18	11	17
JFC9-0804P	1/2" - 20	08	05	6	1/4"	04					
JFC9-0904P	9/16" - 18	09	06	6	1/4"	04	14	10.5	21	14	19
JFC9-0906P	9/16" - 18	09	06	10	3/8"	06	15.5	10.5	21	16	19
JFC9-1206P	3/4" - 16	12	08	10	3/8"	06	15.5	11	25	16	24
JFC9-1208P	3/4" - 16	12	08	12	1/2"	08	17	11	25	19	24
JFC9-1408P	7/8" - 14	14	10	12	1/2"	08					
JFC9-1410P	7/8" - 14	14	10	16	5/8"	10	18.5	12	27.5	22	27
JFC9-1712P	1.1/16" - 12	17	12	20	3/4"	12	21.5	15	30	27	32

JF9
JIC FEMALE 90° ELBOW
PUSH FIT

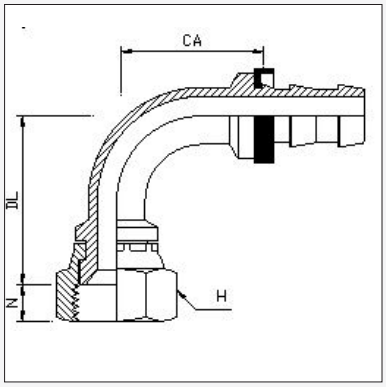

Product Code	JIC Thread			Hose Bore			Dimensions (mm)			
	Thread	Size	Tube	DN	Inch	Size	H	DL	CA	N
JF9-0704P	7/16" - 20	07	04	6	1/4"	04	14.3	29	29	9
JF9-0906P	9/16" - 18	09	06	10	3/8"	06	17.5	35	28	10
JF9-1206P	3/4" - 16	12	08	10	3/8"	06	22.2	38	32	11
JF9-1208P	3/4" - 16	12	08	12	1/2"	08	22.2	44	39	11
JF9-1410P	7/8" - 14	14	10	16	5/8"	10	25.4	53	50	13
JF9-1712P	1.1/16" - 12	17	12	20	3/4"	12	32	58	54	14

* Available in Stainless Steel, add SS to part number eg. JF9SS-0704P

PIRTEK

This page is part of a complete catalogue containing technical and safety data.
All data must be reviewed when selecting a product.
Pirtek reserve the right to change technical specifications without notice

JIC
ORIGIN: NORTH AMERICA

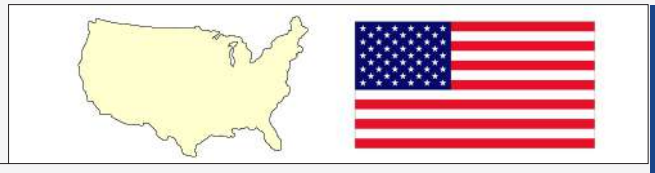

JM1
JIC MALE STRAIGHT PUSH FIT

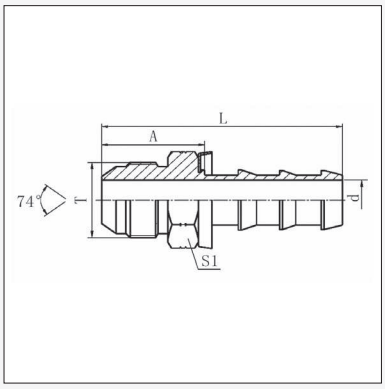

Product Code	JIC Thread			Hose Bore			Dimensions (mm)			
	Thread	Size	Tube	DN	Inch	Size	A	L	S1	d
JM1-0704P	7/16" - 20	07	04	6	1/4"	04	22	40	12	4.3
JM1-0804P	1/2" - 20	08	05	6	1/4"	04				
JM1-0904P	9/16" - 18	09	06	6	1/4"	04	22	40	17	4.3
JM1-0906P	9/16" - 18	09	06	10	3/8"	06	22	40	17	7.5
JM1-1206P	3/4" - 16	12	08	10	3/8"	06	27.2	48.4	22	7.5
JM1-1208P	3/4" - 16	12	08	12	1/2"	08	27.2	52.7	22	9.9
JM1-1408P	7/8" - 14	14	10	12	1/2"	08				
JM1-1410P	7/8" - 14	14	10	16	5/8"	10	30	69	24	12.2
JM1-1712P	1.1/16" - 12	17	12	20	3/4"	12	33.4	72	30	15.5

This page is part of a complete catalogue containing technical and safety data.
All data must be reviewed when selecting a product.
Pirtek reserve the right to change technical specifications without notice

SAE
ORIGIN: NORTH AMERICA

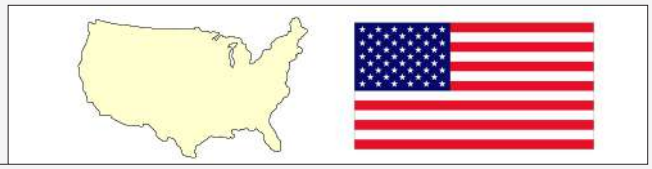

SF1
SAE FEMALE STRAIGHT
PUSH FIT

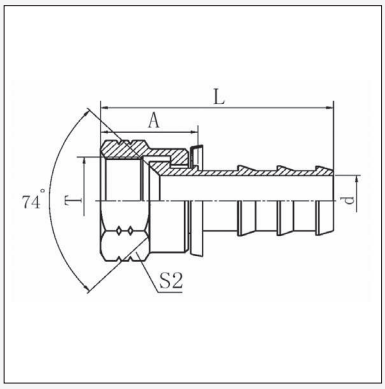

Product Code	SAE Thread			Hose Bore			Dimensions (mm)			
	Thread	Size	Tube	DN	Inch	Size	A	L	S2	d
SF1-1004P	5/8" - 18	10	06	6	1/4"	04	25	44.8	22	4.3
SF1-1006P	5/8" - 18	10	06	10	3/8"	06	20.6	42.4	22	7.6
SF1-1408P	7/8" - 14	14	08	12	1/2"	08	27	52.9	27	9.9
SF1-1712P	1.1/16" - 14	17	12	20	3/4"	12	30.2	68.8	32	15.5

SFC9
SAE FEMALE 90° COMPACT ELBOW
PUSH FIT

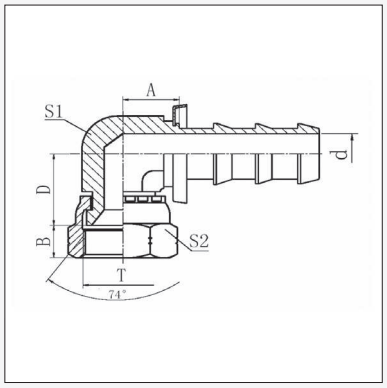

Product Code	SAE Thread			Hose Bore			Dimensions (mm)				
	Thread	Size	Tube	DN	Inch	Size	A	B	D	S1	S2
SFC9-1006P	5/8" - 18	10	06	10	3/8"	06				22	7.6

SM1
SAE MALE STRAIGHT
PUSH FIT

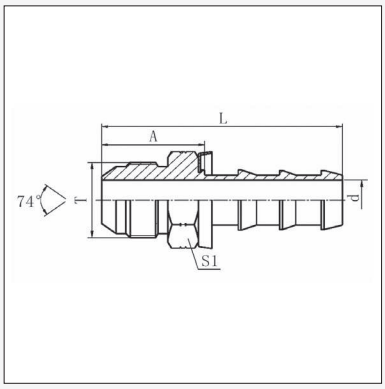

Product Code	SAE Thread			Hose Bore			Dimensions (mm)			
	Thread	Size	Tube	DN	Inch	Size	A	L	S1	d
SM1-1006P	9/16" - 18	10	06	10	3/8"	06	24.5	43.5	17	7.5
SM1-1712P	1.1/16" - 14	17	12	20	3/4"	12	36.8	75.4	30	15.5

PIRTEK

This page is part of a complete catalogue containing technical and safety data.
All data must be reviewed when selecting a product.
Pirtek reserve the right to change technical specifications without notice

WO1

WELD ON STRAIGHT TAIL
PUSH FIT

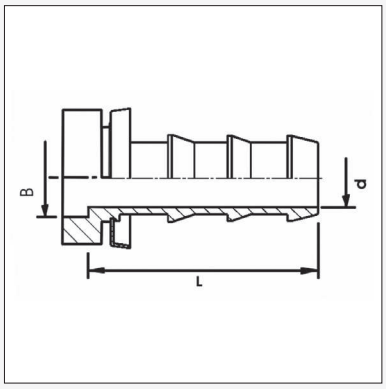

Product Code	Tube Weld			Hose Bore			Dimensions (mm)			
	Bore	Size	ø ins.	DN	Inch	Size	L	ø B	d	
WO1-0404P	04	04	1/4”	06	1/4”	04	24	6.4	4.3	
WO1-0606P	06	06	3/8”	10	3/8”	06	26.2	9.8	7.6	
WO1-0808P	08	08	1/2”	12	1/2”	08	30.5	12.9	9.9	
WO1-1010P	10	10	5/8”	16	5/8”	10	44	16	12.2	
WO1-1212P	12	12	3/4”	20	3/4”	12	43.6	19.2	15.5	

HJ1

HOSE JOINER
PUSH FIT

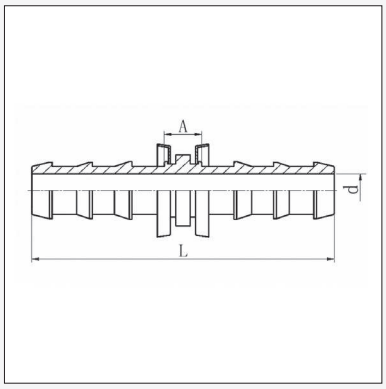

Product Code	Hose tail			Hose Tail			Dimensions (mm)			
	DN	Inch	Size	DN	Inch	Size	A	L	d	
HJ1-0404P	06	1/4”	04	06	1/4”	04	8.4	48	4.3	
HJ1-0606P	10	3/8”	06	10	3/8”	06	8.4	52.4	7.6	
HJ1-0808P	12	1/2”	08	12	1/2”	08	8.4	61	9.9	
HJ1-1010P	16	5/8”	10	16	5/8”	10	9.4	88	12.2	
HJ1-1212P	20	3/4”	12	20	3/4”	12	10	87.2	15.5	

FERRULES

ORIGIN: N/A

RN1 / RN2 FERRULES

FOR FIELD ATTACHABLE FITTINGS (F Series Hose Tails)
TO SUIT R1AT AND R2AT NON-SKIVE HOSES - ORDERED SEPARATELY

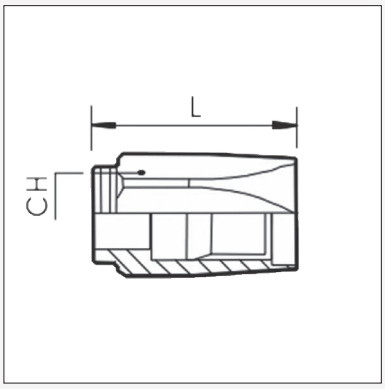

Product Code	To Suit Hose	Hose Bore			Dimension (mm)	
		DN	Inch	Size	L	CH
RN1-04	R1AT-04	06	1/4”	04	40.5	20.5
RN1-06	R1AT-06	10	3/8”	06	46.2	23.9
RN1-08	R1AT-08	12	1/2”	08	47.7	26.9
RN1-12	R1AT-12	20	3/4”	12	60.5	34.8
RN1-16	R1AT-16	25	1”	16	71.4	42.5
RN2-04	R2AT-04	06	1/4”	04	40.5	22.0
RN2-06	R2AT-06	10	3/8”	06	46.2	25.3
RN2-08	R2AT-08	12	1/2”	08	47.7	28.4
RN2-12	R2AT-12	20	3/4”	12	60.5	35.0
RN2-16	R2AT-16	25	1”	16	71.4	45.7

This page is part of a complete catalogue containing technical and safety data.
All data must be reviewed when selecting a product.
Pirtek reserve the right to change technical specifications without notice

BSP
ORIGIN: GREAT BRITAIN

BF1
BSPP FEMALE STRAIGHT
(FERRULE ORDERED SEPARATELY)

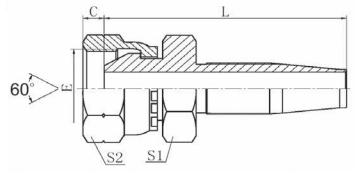

Product Code	BSPP Thread			Nominal ID			Dimensions mm			
	T	Size	Pipe	DN	Inch	Size	A	B	CH	
BF1-0404F	1/4” - 19	04	1/4”	6	1/4”	04		4	19	
BF1-0604F	3/8” - 19	06	3/8”	6	1/4”	04		6	22	
BF1-0606F	3/8” - 19	06	3/8”	10	3/8”	06		6	22	
BF1-0806F	1/2” - 14	08	1/2”	10	3/8”	06		7	27	
BF1-0808F	1/2” - 14	08	1/2”	12	1/2”	08		7	27	
BF1-1212F	3/4” - 14	12	3/4”	20	3/4”	12		9	32	
BF1-1616F	1” - 11	16	1”	25	1”	16		10.5	38	

BTM1
BSPT MALE STRAIGHT
(FERRULE ORDERED SEPARATELY)

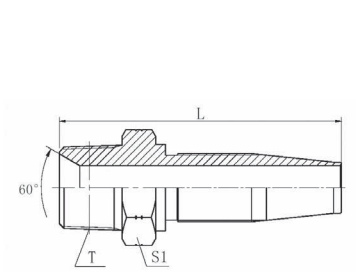

Product Code	BSPT Thread			Nominal ID			Dimensions mm			
	T	Size	Pipe	DN	Inch	Size	L	S1		
BTM1-0404F	1/4” - 19	04	1/4”	6	1/4”	04	26.5	14	17	
BTM1-0604F	3/8” - 19	06	3/8”	6	1/4”	04	27	14	19	
BTM1-0606F	3/8” - 19	06	3/8”	10	3/8”	06	29	15	19	
BTM1-0806F	1/2” - 14	08	1/2”	10	3/8”	06	32	18	22	
BTM1-0808F	1/2” - 14	08	1/2”	12	1/2”	08	32.5	18	22	
BTM1-1212F	3/4” - 14	12	3/4”	20	3/4”	12	39	20	27	
BTM1-1616F	1” - 11	16	1”	25	1”	16	48.1	23	36	

BSP

ORIGIN: GREAT BRITAIN

BF4

BSPP FEMALE 45˚ ELBOW
(FERRULE ORDERED SEPARATELY)

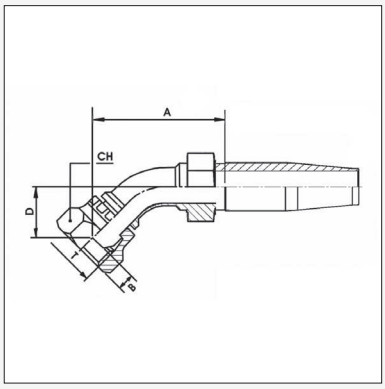

Product Code	BSPP Thread			Nominal ID			Dimensions mm			
	T	Size	Pipe	DN	Inch	Size	A	B	CH	D
BF4-0404F	1/4" - 19	04	1/4"	6	1/4"	04		4	19	
BF4-0606F	3/8" - 19	06	3/8"	10	3/8"	06		6	22	
BF4-0808F	1/2" - 14	08	1/2"	12	1/2"	08		7	27	
BF4-1010F	5/8" - 14	10	5/8"	16	5/8"	10		10		
BF4-1212F	3/4" - 14	12	3/4"	20	3/4"	12		9	32	
BF4-1616F	1" - 11	16	1"	25	1"	16		10.5	38	

BF9

BSPP FEMALE 90˚ ELBOW
(FERRULE ORDERED SEPARATELY)

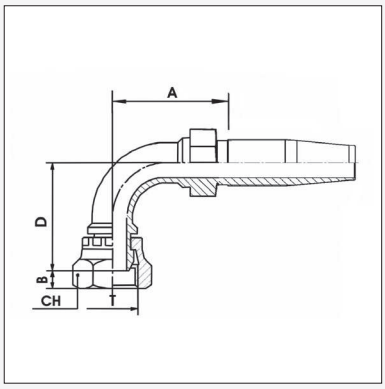

Product Code	BSPP Thread			Nominal ID			Dimensions mm			
	T	Size	Pipe	DN	Inch	Size	A	B	CH	D
BF9-0404F	1/4" - 19	04	1/4"	6	1/4"	04		4	19	
BF9-0606F	3/8" - 19	06	3/8"	10	3/8"	06		6	22	
BF9-0808F	1/2" - 14	08	1/2"	12	1/2"	08		7	27	
BF9-1212F	3/4" - 14	12	3/4"	20	3/4"	12		9	32	
BF9-1616F	1" - 11	16	1"	25	1"	16		10.5	38	

BFC9

BSPP FEMALE 90˚ COMPACT ELBOW
(FERRULE ORDERED SEPARATELY)

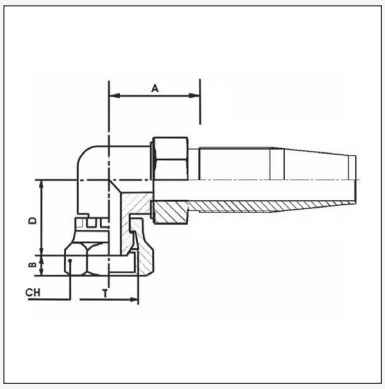

Product Code	BSPP Thread			Nominal ID			Dimensions mm			
	T	Size	Pipe	DN	Inch	Size	A	B	CH	D
BFC9-0404F	1/4" - 19	04	1/4"	6	1/4"	04		4	19	
BFC9-0606F	3/8" - 19	06	3/8"	10	3/8"	06		6	22	
BFC9-0806F	1/2" - 14	08	1/2"	10	3/8"	06		7	27	
BFC9-0808F	1/2" - 14	08	1/2"	12	1/2"	08		7	27	
BFC9-1212F	3/4" - 14	12	3/4"	20	3/4"	12		9	32	

This page is part of a complete catalogue containing technical and safety data.
All data must be reviewed when selecting a product.
Pirtek reserve the right to change technical specifications without notice

JIC
ORIGIN: NORTH AMERICA

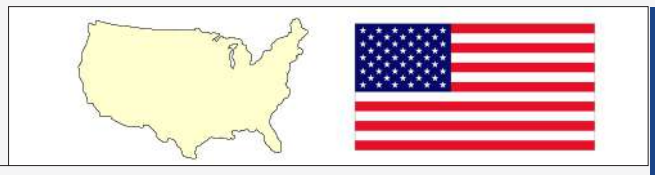

JF1
JIC FEMALE STRAIGHT
(FERRULE ORDERED SEPARATELY)

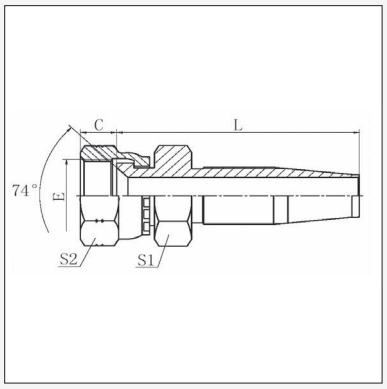

Product Code	JIC Thread			Nominal ID			Dimensions mm			
	T	Size	Pipe	DN	Inch	Size	A	B	CH	
JF1-0704F	7/16" - 20	07	04	6	1/4"	04		8.5	15	
JF1-0804F	1/2" - 20	08	05	6	1/4"	04		9.5	17	
JF1-0904F	9/16" - 18	09	06	6	1/4"	04		9.5	19	
JF1-0906F	9/16" - 18	09	06	10	3/8"	06		9.5	19	
JF1-1206F	3/4" - 16	12	08	10	3/8"	06		10.7	24	
JF1-1208F	3/4" - 16	12	08	12	1/2"	08		10.7	24	
JF1-1408F	7/8" - 14	14	10	12	1/2"	08		12.7	27	
JF1-1410F	7/8" - 14	14	10	16	5/8"	10		12.7	27	
JF1-1710F	1.1/16" - 12	17	12	16	5/8"	10		13.5	32	
JF1-1712F	1.1/16" - 12	17	12	20	3/4"	12		13.5	27	
JF1-2112F	1.5/16" - 12	21	16	20	3/4"	12		16	32	
JF1-2116F	1.5/16" - 12	21	16	25	1"	16		16	32	

JM1
JIC MALE STRAIGHT
(FERRULE ORDERED SEPARATELY)

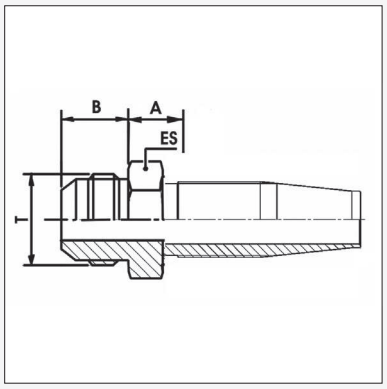

Product Code	JIC Thread			Nominal ID			Dimensions mm			
	T	Size	Pipe	DN	Inch	Size	A	B	ES	
JM1-0704F	7/16" - 20	07	04	6	1/4"	04	26.5	14	14	
JM1-0904F	9/16" - 18	09	06	6	1/4"	04	27.5	14	17	
JM1-0906F	9/16" - 18	09	06	10	3/8"	06	29.5	14	17	
JM1-1206F	3/4" - 16	12	08	10	3/8"	06	33.2	16.7	19	
JM1-1208F	3/4" - 16	12	08	12	1/2"	08	34	16.7	19	
JM1-1408F	7/8" - 14	14	10	12	1/2"	08	34	19.3	24	
JM1-1708F	1.1/16" - 12	17	12	12	1/2"	08	38.9	28.9	27	
JM1-1710F	1.1/16" - 12	17	12	16	5/8"	10	38.9	21.9	27	
JM1-1712F	1.1/16" - 12	17	12	20	3/4"	12	38.5	21.5	27	
JM1-1912F	1.3/16" - 12	19	14	20	3/4"	12	46.6	22.6	32	
JM1-2112F	1.5/16" - 12	21	16	20	3/4"	12	47.1	23.1	36	
JM1-2116F	1.5/16" - 12	21	16	25	1"	16	48.2	23.1	36	

JMF1
JIS METRIC FEMALE STRAIGHT - 60˚ SEAT
(FERRULE ORDERED SEPARATELY)

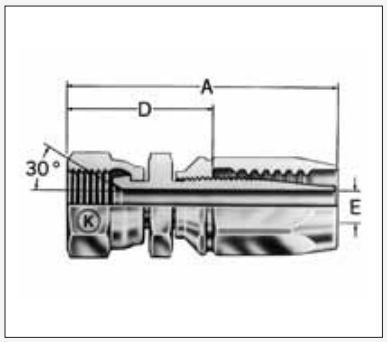

Product Code	JIS Thread			Nominal ID			Dimensions mm			
	T (mm)	Size	Pipe	DN	Inch	Size	A	D	CH	ES
JMF1-1404F	14 x 1.5	14	6 mm	6	1/4"	04	69.4	39.0	18.9	18.9

JIC
ORIGIN: NORTH AMERICA

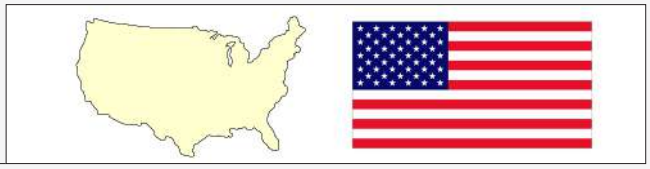

JF4
JIC FEMALE 45˚ ELBOW
(FERRULE ORDERED SEPARATELY)

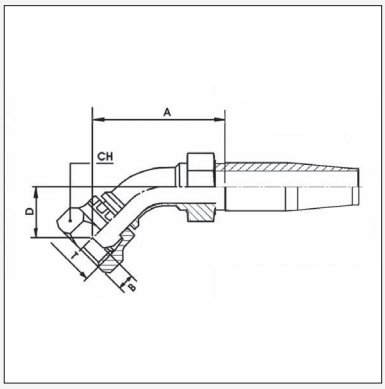

Product Code	JIC Thread			Nominal ID			Dimensions mm			
	T	Size	Pipe	DN	Inch	Size	A	B	CH	D
JF4-0704F	7/16” - 20	07	04	6	1/4”	04		8.5		15
JF4-0804F	1/2” - 20	08	05	6	1/4”	04		9.5		17
JF4-0904F	9/16” - 18	09	06	6	1/4”	04		9.5		19
JF4-0906F	9/16” - 18	09	06	10	3/8”	06		9.5		19
JF4-1206F	3/4” - 16	12	08	10	3/8”	06		10.7		24
JF4-1208F	3/4” - 16	12	08	12	1/2”	08		10.7		24
JF4-1408F	7/8” - 14	14	10	12	1/2”	08		12.7		27
JF4-1712F	1.1/16” - 12	17	12	20	3/4”	12		13.5		32
JF4-2112F	1.5/16” - 12	21	16	20	3/4”	12		16		38
JF4-2116F	1.5/16” - 12	21	16	25	1”	16		16		38

JF9
JIC FEMALE 90˚ ELBOW (FERRULE ORDERED SEPARATELY)

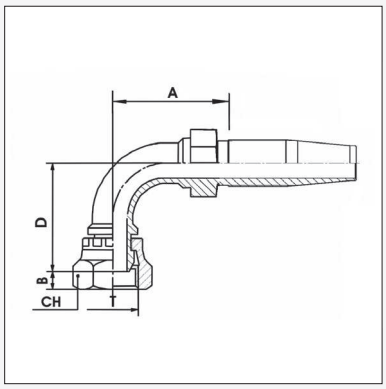

Product Code	JIC Thread			Nominal ID			Dimensions mm			
	T	Size	Pipe	DN	Inch	Size	A	B	CH	D
JF9-0704F	7/16” - 20	07	04	6	1/4”	04		8.5		15
JF9-0804F	1/2” - 20	08	05	6	1/4”	04		9.5		17
JF9-0904F	9/16” - 18	09	06	6	1/4”	04		9.5		19
JF9-0904F-051	1.1/16” - 12	17	12	20	3/4”	12	52	13.8	95	32
JF9-0906F	9/16” - 18	09	06	10	3/8”	06		9.5		19
JF9-0906F-054	9/16" - 18	09	06	10	3/8"	06		9.5		
JF9-1206F	3/4” - 16	12	08	10	3/8”	06		10.7		37
JF9-1208F	3/4” - 16	12	08	12	1/2”	08		10.7		24
JF9-1408F	7/8” - 14	14	10	12	1/2”	08		12.7		27
JF9-1410F	7/8” - 14	14		16	5/8”	10		12.7		27
JF9-1712F	1.1/16” - 12	17	12	20	3/4”	12		13.5		32
JF9-2116F	1.5/16” - 12	21	16	25	1”	16		16		38

JFC9
JIC FEMALE 90˚ COMPACT ELBOW
(FERRULE ORDERED SEPARATELY)

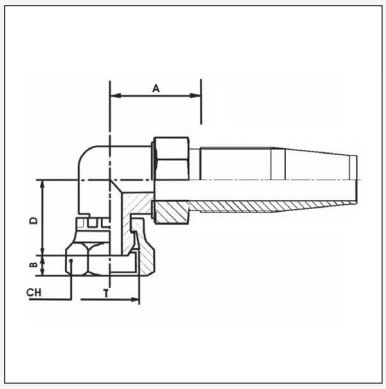

Product Code	JIC Thread			Nominal ID			Dimensions mm			
	T	Size	Pipe	DN	Inch	Size	A	B	CH	D
JFC9-0704F	7/16” - 20	07	04	6	1/4”	04		8.5		15
JFC9-0804F	1/2” - 20	08	05	6	1/4”	04		9.5		17
JFC9-0904F	9/16” - 18	09	06	6	1/4”	04		9.5		19
JFC9-1206F	3/4” - 16	12	08	10	3/8”	06		10.7		24
JFC9-1208F	3/4” - 16	12	08	12	1/2”	08		10.7		24
JFC9-1408F	7/8” - 14	14	10	12	1/2”	08		12.7		27

ORFS
ORIGIN: NORTH AMERICA

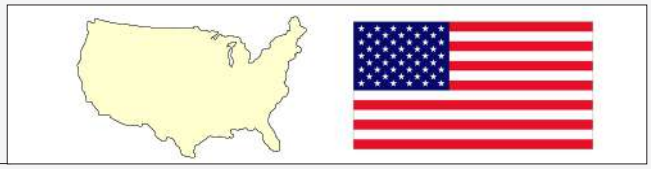

OF1
ORFS FEMALE STRAIGHT (FERRULE ORDERED SEPARATELY)

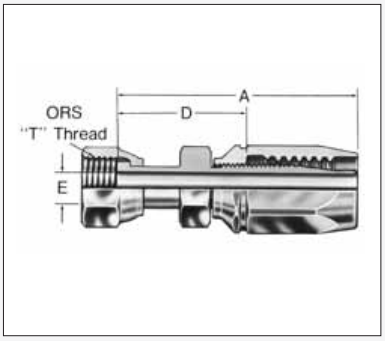

Product Code	JIC Thread			Hose Nominal ID						
	T	Size	Pipe	DN	Inch	Size	A	E	CH	D
OF1-0404F	9/16" - 18	1/4"	04	6	1/4"	04	66.5	4.5	19	33
OF1-0606F	11/16" - 16	3/8"	06	10	3/8"	06	73.0	7.3	22	38
OF1-0808F	13/16" - 16	1/2"	08	12	1/2"	08	79.0	9.8	27	43

OF9
ORFS FEMALE 90˚ ELBOW (FERRULE ORDERED SEPARATELY)

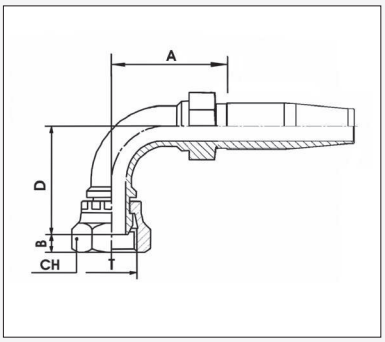

Product Code	JIC Thread			Nominal ID			Dimensions mm			
	T	Size	Pipe	DN	Inch	Size	A	B	CH	D
OF9-0404F	9/16" - 18	1/4"	04	6	1/4"	04	43	8.5	17.5	25
OF9-0606F	11/16" - 16	3/8"	06	10	3/8"	06	49	9.5	20.6	38
OF9-0808F	13/16" - 16	1/2"	08	12	1/2"	08	56	11.0	23.8	41

BPM1
BSPP MALE STRAIGHT
SEPARATE CLAMP REQUIRED

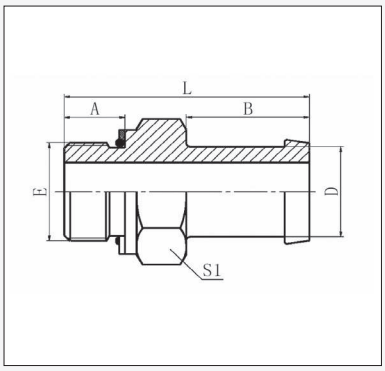

Product Code	BSPP Thread			Nominal ID			Dimensions mm			
	E	Size	Pipe	Dash	Inch	DN	A	B	L	S1
BPM1-1212L	3/4" - 14	12	3/4"	20	3/4"	12	15.5	28	57.5	32
BPM1-1216L	3/4" - 14	12	3/4"	25	1"	16	15.5	35	64.5	32
BPM1-1616L	1" - 11	16	1"	25	1"	16	18	35	69	41
BPM1-1620L	1" - 11	16	1"	32	1.1/4"	20	18	35	70.6	41
BPM1-2012L	1.1/4" - 11	20	1.1/4"	20	3/4"	12	20	28	66	50
BPM1-2016L	1.1/4" - 11	20	1.1/4"	25	1"	16	20	35	73	50
BPM1-2020L	1.1/4" - 11	20	1.1/4"	32	1.1/4"	20	20	35	73	50
BPM1-2024L	1.1/4" - 11	20	1.1/4"	38	1.1/2"	24	20	40	78	50
BPM1-2416L	1.1/2" - 11	24	1.1/2"	25	1"	16	21.5	35	74.5	55
BPM1-2420L	1.1/2" - 11	24	1.1/2"	32	1.1/4"	20	21.5	35	74.5	55
BPM1-2424L	1.1/2" - 11	24	1.1/2"	38	1.1/2"	24	22	35	75.6	55
BPM1-3232L	2" - 11	32	2"	50	2"	32	18.6	36	79	70

This page is part of a complete catalogue containing technical and safety data.
All data must be reviewed when selecting a product.
Pirtek reserve the right to change technical specifications without notice

BSP

ORIGIN: GREAT BRITAIN

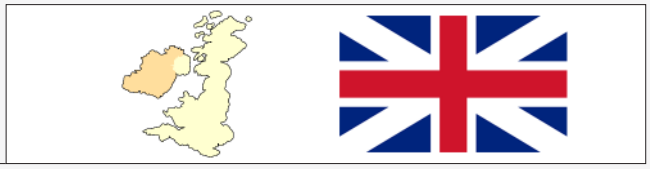

BTM1

BSPT MALE STRAIGHT
SEPARATE CLAMP REQUIRED

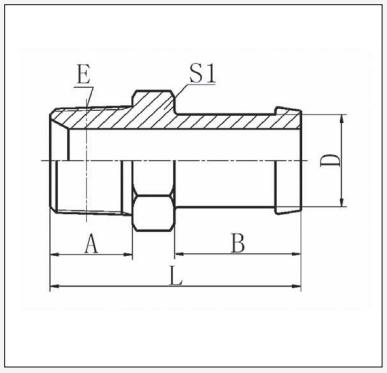

Product Code	BSPT Thread			Nominal ID			Dimensions mm			
	E	Size	Pipe	Dash	Inch	DN	A	B	L	S1
BTM1-0812L	1/2" - 14	08	1/2"	20	3/4"	12	20	28	56	22
BTM1-1212L	3/4" - 14	12	3/4"	20	3/4"	12	20	28	58	30
BTM1-1216L	3/4" - 14	12	3/4"	25	1"	16	20	35	65	30
BTM1-1220L	3/4" - 14	12	3/4"	32	1.1/4"	20	19.5	35	65.5	36
BTM1-1616L	1" - 11	16	1"	25	1"	16	25.5	35	71.5	36
BTM1-1620L	1" - 11	16	1"	32	1.1/4"	20	25.5	35	71.5	36
BTM1-1624L	1" - 11	16	1"	38	1.1/2"	24	25.5	40	76.5	50
BTM1-2016L	1.1/4" - 11	20	1.1/4"	25	1"	16	26.5	35	74.5	36
BTM1-2020L	1.1/4" - 11	20	1.1/4"	32	1.1/4"	20	26.5	35	74.5	46
BTM1-2024L	1.1/4" - 11	20	1.1/4"	38	1.1/2"	24	26.5	40	79.5	46
BTM1-2420L	1.1/2" - 11	24	1.1/2"	32	1.1/4"	20	26.5	35	76.5	50
BTM1-2424L	1.1/2" - 11	24	1.1/2"	38	1.1/2"	24	26.5	40	81.5	50
BTM1-2432L	1.1/2" - 11	24	1.1/2"	50	2"	32	26.5	35.6	76.2	55
BTM1-3232L	2" - 11	32	2"	50	2"	32	30	44.5	91.5	65
BTM1-3240L	2" - 11	32	2"	63	2.1/2"	40	30	55.6	102.6	70

BTM9

BSPT MALE 90° ELBOW
SEPARATE CLAMP REQUIRED

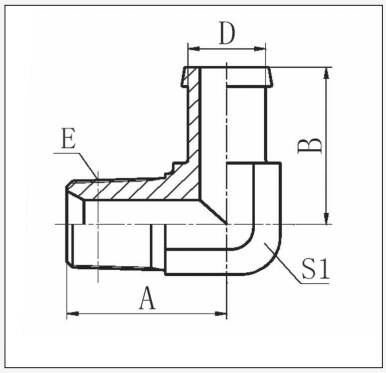

Product Code	BSPT Thread			Nominal ID			Dimensions mm			
	Thread E	Size	Pipe	Dash	Inch	DN	A	B	S1	D
BTM9-0812L	1/2" - 14	08	1/2"	20	3/4"	12	36	43	22	19
BTM9-1212L	3/4" - 14	12	3/4"	20	3/4"	12	43.5	46	27	19
BTM9-1216L	3/4" - 14	12	3/4"	25	1"	16	43.5	53	27	25.4
BTM9-1220L	3/4" - 14	12	3/4"	32	1.1/4"	20	50.3	60.6	32.9	33
BTM9-1616L	1" - 11	16	1"	25	1"	16	50	56.5	33	25.4
BTM9-1620L	1" - 11	16	1"	32	1.1/4"	20	50	56.5	33	31.8
BTM9-1624L	1" - 11	16	1"	38	1.1/2"	24	55	65	41	38.1
BTM9-2016L	1.1/4" - 11	20	1.1/4"	25	1"	16	56.5	61	41	25.4
BTM9-2020L	1.1/4" - 11	20	1.1/4"	32	1.1/4"	20	56.5	61	41	31.8
BTM9-2024L	1.1/4" - 11	20	1.1/4"	38	1.1/2"	24	56	65	41	38.1
BTM9-2424L	1.1/2" - 11	24	1.1/2"	38	1.1/2"	24	62.5	71	48	38.1
BTM9-3232L	2" - 11	32	2"	50	2"	32	68	78.5	63	50.8

BPM9

BSPP MALE 90° ELBOW
SEPARATE CLAMP REQUIRED

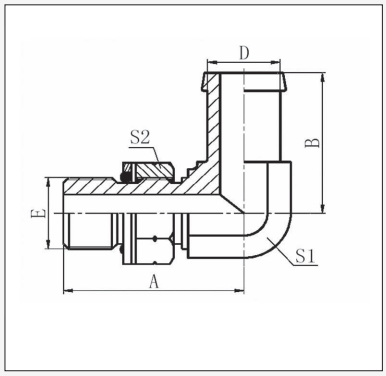

Product Code	BSPP Thread			Nominal ID			Dimensions mm				
	Thread E	Size	Pipe	Dash	Inch	DN	A	B	S1	S2	D
BPM9-1212L	3/4" - 14	12	3/4"	20	3/4"	12	50.5	56	27	32	19
BPM9-1216L	3/4" - 14	12	3/4"	25	1"	16	50.5	53	27	32	25.4
BPM9-1220L	3/4" - 14	12	3/4"	32	1.1/4"	20	50.3	60.6	32.9	33	31.8
BPM9-1616L	1" - 11	16	1"	25	1"	16	54.5	60	33	41	25.4
BPM9-1620L	1" - 11	16	1"	32	1.1/4"	20	58	64	41	41	31.8
BPM9-1624L	1" - 11	16	1"	38	1.1/2"	24	60	63.7	41.1	41	38.1
BPM9-2016L	1.1/4" - 11	20	1.1/4"	25	1"	16	59	59	41	50	25.4
BPM9-2020L	1.1/4" - 11	20	1.1/4"	32	1.1/4"	20	58	64	41	50	31.8
BPM9-2024L	1.1/4" - 11	20	1.1/4"	38	1.1/2"	24	60	63	41	50	38.1
BPM9-2420L	1.1/2" - 11	24	1.1/2"	32	1.1/4"	20	63	71.6	48	55	31.8
BPM9-2424L	1.1/2" - 11	24	1.1/2"	38	1.1/2"	24	63	71.6	48	55	38.1

UN'O' / SAE FLANGE

ORIGIN: NORTH AMERICA

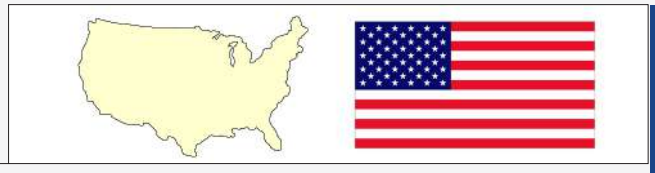

UNM1

UN'O' MALE STRAIGHT
SEPARATE CLAMP REQUIRED

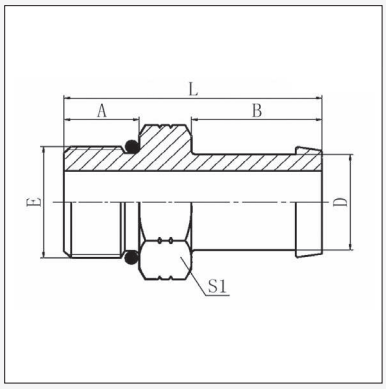

Product Code	UN'O' Thread			Nominal ID			Dimensions mm			
	Thread E	Size	Pipe	Dash	Inch	DN	A	B	L	S1
UNM1-1212L	3/4" - 16	12	08	20	3/4"	12	11.1	28	47	22
UNM1-1412L	7/8" - 14	14	10	20	3/4"	12	12.7	28	50.5	27
UNM1-1712L	1.1/16" - 12	17	12	20	3/4"	12	15.1	28	54	32
UNM1-1716L	1.1/16" - 12	17	12	25	1"	16	15.1	35	61	32
UNM1-2116L	1.5/16" - 12	21	16	25	1"	16	15.1	35	61	38
UNM1-2120L	1.5/16" - 12	21	16	32	1.1/4"	20	15.1	35	61	38
UNM1-2620L	1.5/8" - 12	26	20	32	1.1/4"	20	15.1	35	65	55
UNM1-2624L	1.5/8" - 12	26	20	38	1.1/2"	24	15.1	40	70	50
UNM1-3024L	1.7/8" - 12	30	24	38	1.1/2"	24	15.1	40	70	55

UNM9

UN'O' MALE 90° ELBOW
SEPARATE CLAMP REQUIRED

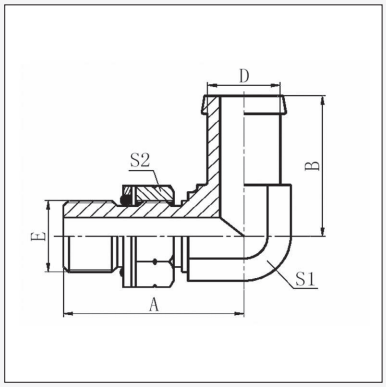

Product Code	UN'O' Thread			Nominal ID			Dimensions mm			
	Thread E	Size	Pipe	Dash	Inch	DN	A	B	S1	D
UNM9-1212L	3/4" - 16	12	08	20	3/4"	12	39.5	43	22	19
UNM9-1412L	7/8" - 14	14	10	20	3/4"	12	45	43	22	19
UNM9-1712L	1.1/16" - 12	17	12	20	3/4"	12	51	46	27	19
UNM9-1716L	1.1/16" - 12	17	12	25	1"	16	51	53	27	25.4
UNM9-2116L	1.5/16" - 12	21	16	25	1"	16	54.5	56.5	33	25.4
UNM9-2120L	1.5/16" - 12	21	16	32	1.1/4"	20	54.5	56.5	33	31.8
UNM9-2620L	1.5/8" - 12	26	20	32	1.1/4"	20	59.5	61	41	31.8
UNM9-2624L	1.5/8" - 12	26	20	38	1.1/2"	24	59.5	66.5	41	38.1

C619

CODE 61 90° ELBOW
SEPARATE CLAMP REQUIRED

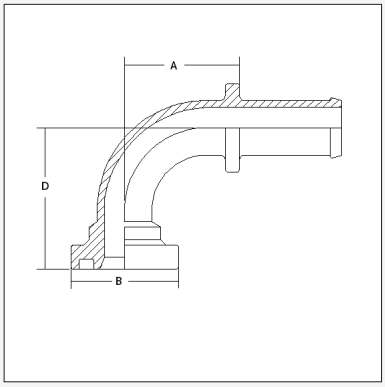

Product Code	Flange			Hose Bore			Dimensions(mm)			
	Bore	Size	Ø ins.	DN	Inch	Size	A	Ø B	D	
C619-3224L	2"	32	2.13/16"	38	1.1/2"	24	98.4	71.4	91	

JIC
ORIGIN: NORTH AMERICA

JF1
JIC FEMALE STRAIGHT

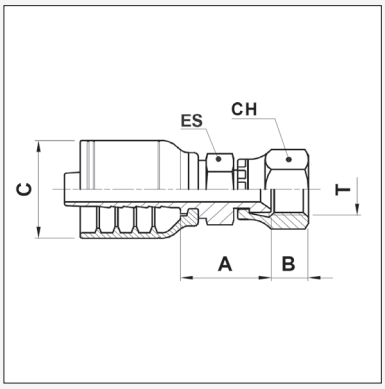

Product Code	JIC Thread			Nominal ID			Dimensions (mm / ")				
	T	Size	Pipe	DN	Inch	Size	A	B	CH	ES	C
JF1-0806G	1/2" - 20	08	05	10	5/16"	06	18.5	10.1	5/8"	1/2"	17.5
JF1-0906G	9/16" - 18	09	06	10	5/16"	06	21.3	10.1	11/16"	9/16"	17.5

NM1
NPT MALE STRAIGHT

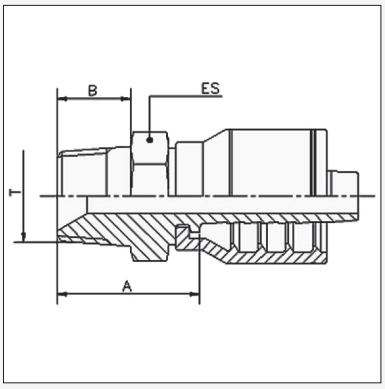

Product Code	NPT Thread		Nominal ID			Dimensions mm			
	T	Size	DN	Inch	Dash	A	B	ES	
NM1-0406G	1/4" - 18	04	10	5/16"	06	23.5	14	14	

PIRTEK

This page is part of a complete catalogue containing technical and safety data.
All data must be reviewed when selecting a product.
Pirtek reserve the right to change technical specifications without notice

SAE
ORIGIN: NORTH AMERICA

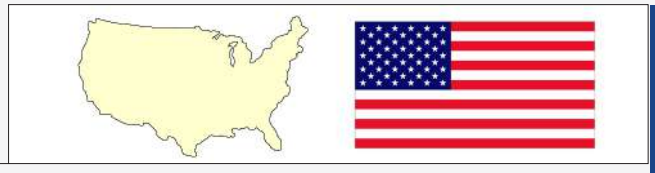

SF1
SAE FEMALE STRAIGHT

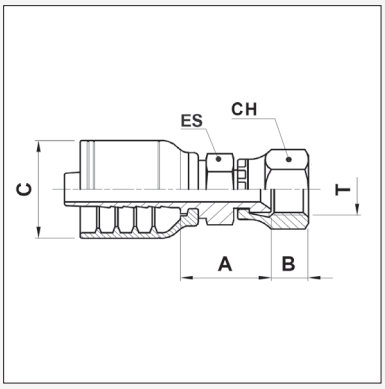

Product Code	SAE Thread			Hose Bore			Dimensions (mm / ")				
	Thread	Size	Tube	DN	Inch	Size	A	B	CH	ES	C
SF1-1006G	5/8" - 18	10	06	10	5/16"	06	17.2	10.7	3/4"	9/16"	17.5

SF4
SAE FEMALE 45° ELBOW

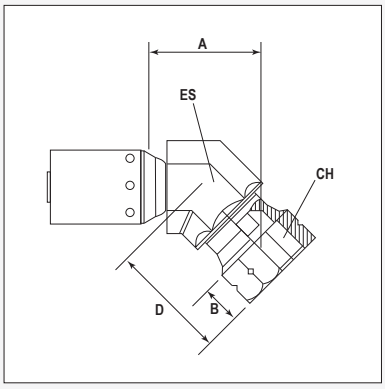

Product Code	SAE Thread			Hose Bore			Dimensions (mm / ")				
	Thread	Size	Tube	DN	Inch	Size	A	B	D	CH	ES
SF4-1006G	5/8" - 18	10	06	10	5/16"	06	25.2	10.9	29.2	3/4"	19

SF9
SAE FEMALE 90° ELBOW

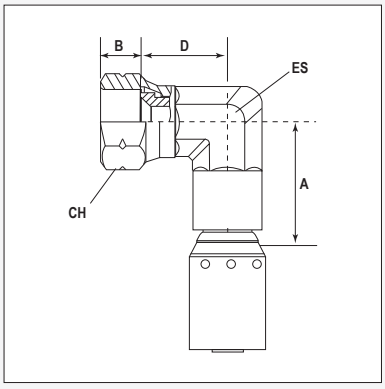

Product Code	SAE Thread			Hose Bore			Dimensions (mm / ")				
	Thread	Size	Tube	DN	Inch	Size	A	B	D	CH	ES
SF9-1006G	5/8" - 18	10	06	10	5/16"	06	29.3	10.9	19.8	3/4"	14

BSP
ORIGIN: GREAT BRITAIN

BF1
BSPP FEMALE STRAIGHT
INCORPORATES O-RING SEAL

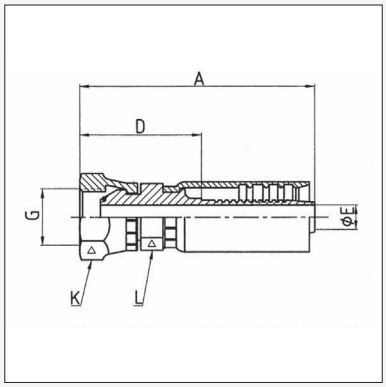

Product Code	BSPP Thread			Nominal ID			Dimensions mm					Synflex Data [a]	
	G	Size	Pipe	DN	Inch	Size	A	D	L	K	Ø E	Synflex Code	Pusher 4599-
BF1-0202S7 †	1/8" - 28	02	1/8"	3	1/8"	02	40	26.6	14	14	2.08	90302-02P000	FP501
BF1-0403S7	1/4" - 19	04	1/4"	5	3/16"	03	54.8	35.8	14	19	2.77	90303-04B000	FP002
BF1-0404S7	1/4" - 19	04	1/4"	6	1/4"	04	58.8	32.8	14	19	3.96	90304-04B000	FP002
BF1-0606S7	3/8" - 19	06	3/8"	10	3/8"	06	67.8	35.8	17	22	7.14	90306-06B000	FP503
BF1-0808S7	1/2" - 14	08	1/2"	12	1/2"	08	77.4	39.4	22	27	9.93	90308-08B000	FP505
BF1-1212S7	3/4" - 14	12	3/4"	20	3/4"	12	86.9	43.9	28	32	15.88	90312-12B000	FP506
BF1-1616S7	1" - 11	16	1"	25	1"	16	101.7	44.7	36	41	20.65	90316-16B000	FP508

† Denotes O-Ring Seal not applicable on this fitting

[a] The requisite Synflex Die is dependent on which hose is used. Refer to Catalogue Section B Thermoplastic Hoses for the appropriate Synflex Die No.

BFC9
BSPP FEMALE COMPACT 90° ELBOW
INCORPORATES O-RING SEAL

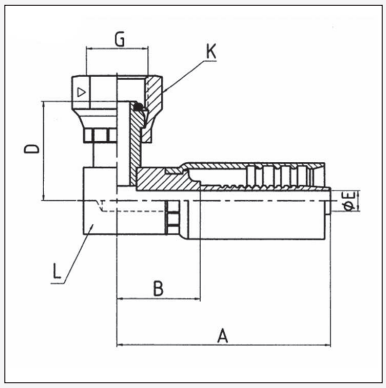

Product Code	BSPP Thread			Nominal ID			Dimensions mm					Synflex Data [a]	
	G	Size	Pipe	DN	Inch	Size	A	B	D	K	Ø E	Synflex Code	Pusher 4599-
BFC9-0404S7	1/4" - 19	04	1/4"	6	1/4"	04	48.2	22.4	23	18	3.96	90304-04B0B0	PC601
BFC9-0606S7	3/8" - 19	06	3/8"	10	3/8"	06	57.5	25.5	27	21	7.14	90306-06B0B0	PC602

[a] The requisite Synflex Die is dependent on which hose is used. Refer to Catalogue Section B Thermoplastic Hoses for the appropriate Synflex Die No.

PIRTEK

This page is part of a complete catalogue containing technical and safety data.
All data must be reviewed when selecting a product.
Pirtek reserve the right to change technical specifications without notice

NPT / NPSM
ORIGIN: NORTH AMERICA

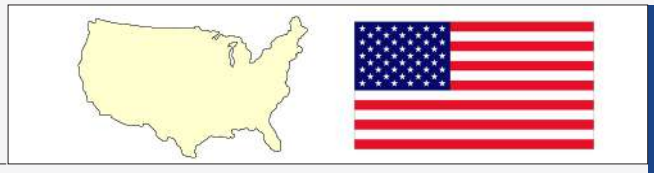

NF1
NPSM FEMALE STRAIGHT

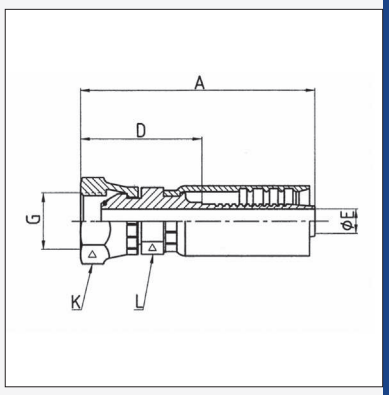

Product Code	NPSM Thread			Nominal ID			Dimensions mm					Synflex Data [a]	
	G	Size	Pipe	DN	Inch	Size	A	D	L	K	Ø E	Synflex Code	Pusher 4599-
NF1-0402S7	1/4" - 18	04	1/4"	3	1/8"	02	42.9	27	12.7	17.5	1.9	90302-042400	FP024
NF1-0403S7	1/4" - 18	04	1/4"	5	3/16"	03	52.7	28.6	15.9	19.1	2.8	90303-042400	FP002
NF1-0404S7	1/4" - 18	04	1/4"	6	1/4"	04	60.3	33.3	15.9	19.1	4.0	90304-042400	FP002
NF1-0606S7	3/8" - 18	06	3/8"	10	3/8"	06	67.5	30.2	15.9	19.1	7.1	90306-062400	FP004
NF1-0808S7	1/2" - 14	08	1/2"	12	1/2"	08	77.8	34.9	25.4	25.4	9.9	90308-082400	FP018

[a] The requisite Synflex Die is dependent on which hose is used. Refer to Catalogue Section B Thermoplastic Hoses for the appropriate Synflex Die No.

NM1
NPT MALE STRAIGHT

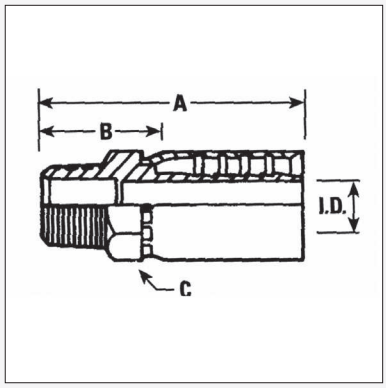

Product Code	NPT Thread			Nominal ID			Dimensions mm					Synflex Data [a]	
	Thread	Size	Pipe	DN	Inch	Size	A	B	C	ID		Synflex Code	Pusher 4599-
NM1-0202S7	1/8" - 27	2	1/8"	3	1/8"	2	34.1	19.1	12.7	1.9		90302-021000	MP023
NM1-0203S7	1/8" - 27	2	1/8"	5	3/16"	3	47.8	27.0	14.3	2.8		90303-021000	MP001
NM1-0603S7	3/8" - 18	6	3/8"	5	3/16"	3	54.7	34.9	19.1	2.8		90303-061000	MP005
NM1-0204S7	1/8" - 27	2	1/8"	6	1/4"	4	54.1	27.0	15.9	4.0		90304-021000	MP002
NM1-0403S7	1/4" - 18	4	1/4"	5	3/16"	3	52.3	31.8	17.5	2.8		90303-041000	MP004
NM1-0404S7	1/4" - 18	4	1/4"	6	1/4"	4	58.7	31.8	17.5	4.0		90304-041000	MP004
NM1-0604S7	3/8" - 18	6	3/8"	6	1/4"	4	61.1	33.3	19.1	4.0		90304-061000	MP005
NM1-0405S7	1/4" - 18	4	1/4"	8	5/16"	5	58.8	28.6	17.5	5.6		90305-041000	MP004
NM1-0406S7	1/4" - 18	4	1/4"	10	3/8"	6	65.8	33.3	19.1	7.1		90306-041000	MP005
NM1-0606S7	3/8" - 18	6	3/8"	10	3/8"	6	65.8	33.3	19.1	7.1		90306-061000	MP005
NM1-0806S7	1/2" - 14	8	1/2"	10	3/8"	6	72.2	39.7	23.8	7.1		90306-081000	MP009
NM1-0808S7	1/2" - 14	8	1/2"	12	1/2"	8	77.0	38.1	23.8	9.9		90308-081000	MP009
NM1-1212S7	3/4" - 14	12	3/4"	20	3/4"	12	81.8	34.9	28.6	15.9		90312-121000	MP011
NM1-1616S7	1" - 11½	16	1"	25	1"	16	100.8	41.3	34.9	20.6		90316-161000	MP013

[a] The requisite Synflex Die is dependent on which hose is used. Refer to Catalogue Section B Thermoplastic Hoses for the appropriate Synflex Die No.

NPT / NPSM

ORIGIN: NORTH AMERICA

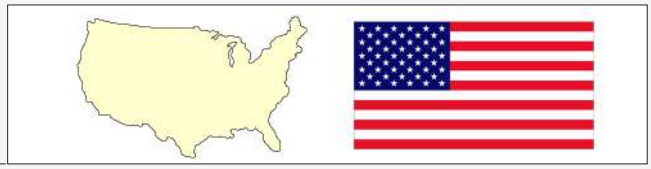

NMS1

NPT SWIVEL MALE STRAIGHT

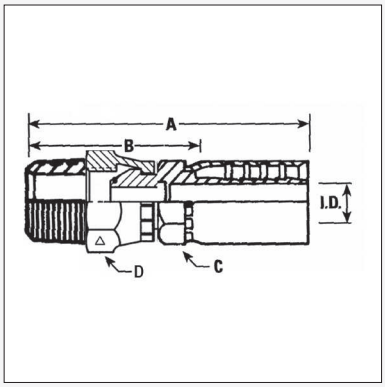

Product Code	NPT Thread			Nominal ID			Dimensions mm					Synflex Data [a]	
	Thread	Size	Pipe	DN	Inch	Size	A	B	C	D	ID	Synflex Code	Pusher 4599-
NMS1-0404S7	1/4" - 18	4	1/4"	6	1/4"	4	72.9	46.0	15.9	17.5	4.0	90304-041400	MP003
NMS1-0606S7	3/8" - 18	6	3/8"	10	3/8"	6	80.0	42.9	19.0	19.0	7.1	90306-061400	MP006

[a] The requisite Synflex Die is dependent on which hose is used. Refer to Catalogue Section B Thermoplastic Hoses for the appropriate Synflex Die No.

PIRTEK

This page is part of a complete catalogue containing technical and safety data.
All data must be reviewed when selecting a product.
Pirtek reserve the right to change technical specifications without notice

JIC
ORIGIN: NORTH AMERICA

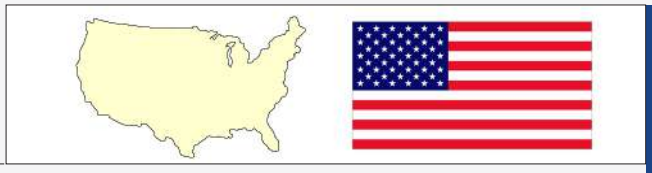

JF1
JIC FEMALE STRAIGHT

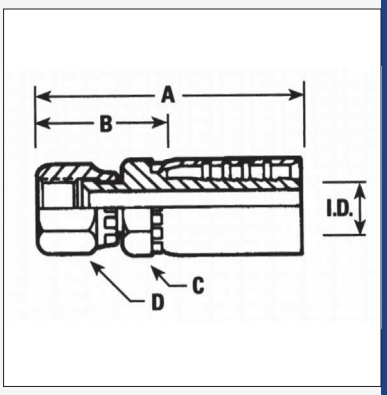

Product Code	JIC / *SAE* Thread			Nominal ID			Dimensions mm					Synflex Data [a]	
	Thread	Size	Pipe	DN	Inch	Size	A	B	C	D	ID	Synflex Code	Pusher 4599-
JF1-0602S7	3/8" - 24	06	03	3	1/8"	02	41.9	36.5	12.7	14.3	2.0	90302-035400	FP017
JF1-0702S7	7/16" - 20	07	04	3	1/8"	02	43.5	27.0	12.7	15.9	2.0	90302-045400	FP010
JF1-0703S7 †	7/16" - 20	07	04	5	3/16"	03	54.8	34.9	14.3	15.9	2.8	***90303-045400***	FP011
JF1-0803S7 †	1/2" - 20	08	05	5	3/16"	03	54.8	34.9	14.3	19.1	2.8	***90303-055400***	FP001
JF1-0704S7 †	7/16" - 20	07	04	6	1/4"	04	64.3	36.5	15.9	15.9	4.0	***90304-045400***	FP012
JF1-0804S7 †	1/2" - 20	08	05	6	1/4"	04	64.3	36.5	15.9	19.1	4.0	***90304-055400***	FP013
JF1-0904S7	9/16" - 18	09	06	6	1/4"	04	64.3	36.5	15.9	19.1	4.0	90304-065500	FP013
JF1-0805S7 †	1/2" - 20	08	05	8	5/16"	05	64.3	31.8	15.9	19.1	5.6	***90305-055400***	FP013
JF1-0905S7	9/16" - 18	09	06	8	5/16"	05	64.3	34.9	15.9	19.1	5.6	90305-065500	FP013
JF1-0906S7	9/16" - 18	09	06	10	3/8"	06	71.5	38.1	19.1	19.1	7.1	90306-065500	FP015
JF1-1206S7 †	3/4" - 16	12	08	10	3/8"	06	71.5	34.9	19.1	23.8	7.1	***90306-085400***	FP005
JF1-1208S7 †	3/4" - 16	12	08	12	1/2"	08	80.2	41.3	22.2	23.8	9.9	***90308-085400***	FP016
JF1-1408S7 †	7/8" - 14	14	10	12	1/2"	08	80.2	41.3	22.2	27.0	9.9	***90308-105400***	FP006
JF1-1712S7	1.1/16" - 12	17	12	20	3/4"	12	87.3	41.3	28.6	31.9	15.9	90312-125500	FP008
JF1-2116S7	1.5/16" - 12	21	16	25	1"	16	103.2	42.9	34.9	38.1	20.6	90316-165500	FP009
STAINLESS STEEL FITTINGS													
JF1SS-0704S7†	7/16" - 20	07	04	6	1/4"	04	64.3	36.5	15.9	15.9	4.0	***90A04-045400***	FP012
JF1SS-0906S7	9/16" - 18	09	06	10	3/8"	06	71.5	38.1	19.1	19.1	7.1	90A06-065500	FP015
JF1SS-1208S7†	3/4" - 16	12	08	12	1/2"	08	80.2	41.3	22.2	23.8	9.9	***90A08-085400***	FP016

[a] The requisite Synflex Die is dependent on which hose is used. Refer to Catalogue Section B Thermoplastic Hoses for the appropriate Synflex Die No.

† Please note that the fittings with the Product and Synflex Codes shown in Bold Italics have double seats that make them compatible with both JIC 37° and SAE 45° male connectors

JIC
ORIGIN: NORTH AMERICA

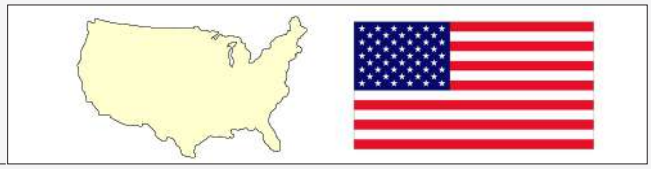

JM1
JIC MALE STRAIGHT

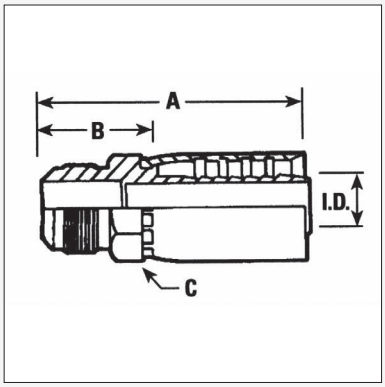

Product Code	JIC Thread			Nominal ID			Dimensions mm					Synflex Data [a]	
	Thread	Size	Pipe	DN	Inch	Size	A	B	C	ID		Synflex Code	Pusher 4599-
JM1-0703S7	7/16" - 20	7	4	5	3/16"	3	52.1	31.8	14.3	2.8		90303-045000	MP001
JM1-0704S7	7/16" - 20	7	4	6	1/4"	4	58.4	31.8	15.9	4.0		90304-045000	MP002
JM1-0904S7	9/16" - 18	9	6	6	1/4"	4	61.0	33.5	19.1	4.0		90304-065000	MP005
JM1-0905S7	9/16" - 18	9	6	8	5/16"	5	58.4	33.3	17.5	5.6		90305-065000	MP004
JM1-0906S7	9/16" - 18	9	6	10	3/8"	6	65.7	34.9	19.1	7.1		90306-065000	MP005
JM1-1206S7	3/4" - 16	12	8	10	3/8"	6	68.3	34.9	20.6	7.1		90306-085000	MP007
JM1-1208S7	3/4" - 16	12	8	12	1/2"	8	73.1	36.5	22.2	9.9		90308-085000	MP008
JM1-1408S7	7/8" - 14	14	10	12	1/2"	8	78.8	36.5	23.8	9.9		90308-105000	MP009
JM1-1712S7	1.1/16"-12	17	12	20	3/4"	12	84.4	38.1	28.6	15.5		90312-125000	MP011

[a] The requisite Synflex Die is dependent on which hose is used. Refer to Catalogue Section B Thermoplastic Hoses for the appropriate Synflex Die No.

JF4
JIC FEMALE 45° ELBOW

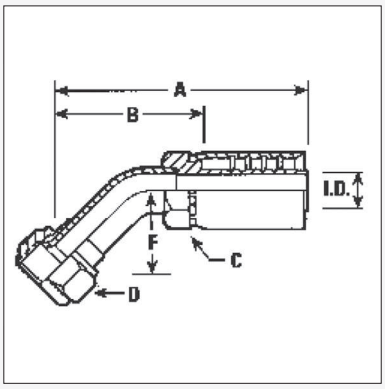

Product Code	JIC Thread			Nominal ID			Dimensions mm					Synflex Data [a]	
	Thread	Size	Pipe	DN	Inch	Size	A	B	F	D	ID	Synflex Code	Pusher 4599-
JF4-0704S7	7/16" - 20	7	4	6	1/4"	4	64.8	38.1	11.9	14.3	4.0	90304-045540	TP204
JF4-0804S7	1/2" - 20	08	05	6	1/4"	04	69.4	41.3	13.4	15.9	4.0	90304-055540	TP205
JF4-0905S7	9/16" - 18	9	6	8	5/16"	5	79.0	49.2	9.9	17.5	5.6	90305-065540	TP206
JF4-0906S7	9/16" - 18	9	6	10	3/8"	6	83.8	49.2	9.9	17.5	7.1	90306-065540	TP206
JF4-1206S7	3/4" - 16	12	8	10	3/8"	6	89.9	57.2	14.0	22.2	7.1	90306-085540	TP208
JF4-1208S7	3/4" - 16	12	8	12	1/2"	8	83.4	41.3	18.1	22.2	9.9	90308-085540	TP308

[a] The requisite Synflex Die is dependent on which hose is used. Refer to Catalogue Section B Thermoplastic Hoses for the appropriate Synflex Die No.

PIRTEK

This page is part of a complete catalogue containing technical and safety data.
All data must be reviewed when selecting a product.
Pirtek reserve the right to change technical specifications without notice

JIC
ORIGIN: NORTH AMERICA

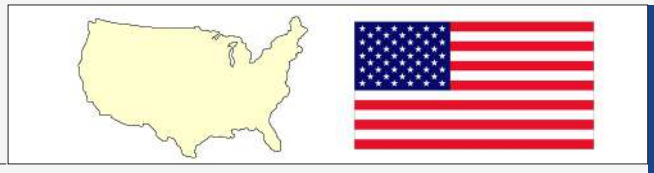

JF9 / JF9L
JIC FEMALE 90° ELBOW INCLUDING LONG DROPS

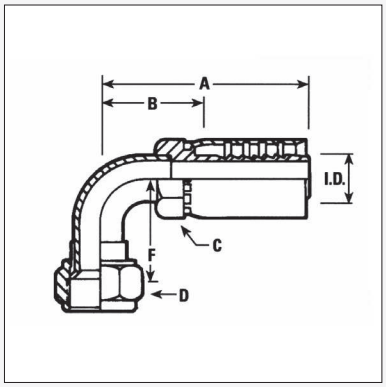

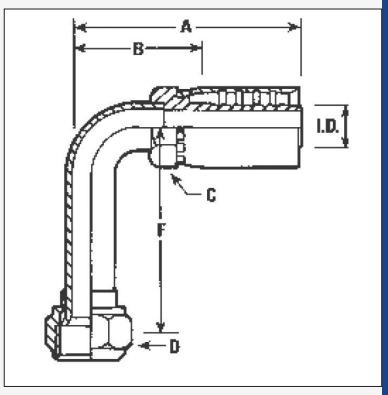

Product Code	JIC Thread			Nominal ID			Dimensions mm					Synflex Data [a]	
	Thread	Size	Pipe	DN	Inch	Size	A	B	F	D	ID	Synflex Code	Pusher 4599-
JF9-0703S7	7/16" - 20	7	4	5	3/16"	3	64.8	42.9	17.3	14.3	2.8	90303-0455S0	TP204
JF9-0704S7	7/16" - 20	7	4	6	1/4"	4	70.0	42.9	17.3	14.3	4.0	90304-0455S0	TP204
JF9-0804S7	1/2" - 20	8	5	6	1/4"	4	60.3	33.3	25.4	15.9	4.0	90304-0555S0	TP205
JF9-0905S7	9/16" - 18	9	6	8	5/16"	5	77.7	47.6	28.6	17.5	5.6	90305-0655S0	TP206
JF9-0906S7	9/16" - 18	9	6	10	3/8"	6	82.6	49.2	21.6	17.5	7.1	90306-0655S0	TP206
JF9-1206S7	3/4" - 16	12	8	10	3/8"	6	84.8	50.8	27.7	22.2	7.1	90306-0855S0	TP208
JF9-1208S7	3/4" - 16	12	8	12	1/2"	8	89.7	49.2	27.7	22.2	9.9	90308-0855S0	TP308
JF9-1408S7	7/8" - 14	14	10	12	1/2"	8	95.0	55.6	31.2	25.4	9.9	90308-1055S0	TP310
JF9-1712S7	1.1/16"-12	17	12	20	3/4"	12	98.4	52.4	58.7	31.8	15.9	90312-1255S0	TP312
LONG DROP ELBOWS													
JFL9-0704S7	7/16" - 20	7	4	6	1/4"	4	58.7	31.7	45.7	14.3	4.0	90304-0455L0	TP204
JFL9-0906S7	9/16" - 18	9	6	10	3/8"	6	82.3	49.2	55.4	17.5	7.1	90306-0655L0	TP206
JFL9-1206S7	3/4" - 16	12	8	10	3/8"	6	69.9	33.3	61.7	22.2	7.1	90306-0855L0	TP208

[a] The requisite Synflex Die is dependent on which hose is used. Refer to Catalogue Section B Thermoplastic Hoses for the appropriate Synflex Die No.

SF1
SAE FEMALE STRAIGHT

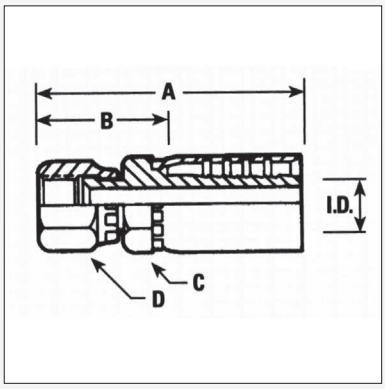

Product Code	SAE Thread			Nominal ID			Dimensions mm					Synflex Data [a]	
	Thread	Size	Pipe	DN	Inch	Size	A	B	C	D	ID	Synflex Code	Pusher 4599-
SF1-1005S7	5/8" - 18	10	06	8	5/16"	05	64.3	31.8	15.9	20.6	5.6	90305-06A000	FP003
SF1-1006S7	5/8" - 18	10	06	10	3/8"	06	71.5	34.9	19.1	20.6	7.1	90306-06A000	FP014
SF1-1712S7	1.1/16 - 14	17	12	20	3/4"	12	87.3	41.3	28.6	31.8	15.9	90312-12A000	FP008

[a] The requisite Synflex Die is dependent on which hose is used. Refer to Catalogue Section B Thermoplastic Hoses for the appropriate Synflex Die No.

ORFS
ORIGIN: NORTH AMERICA

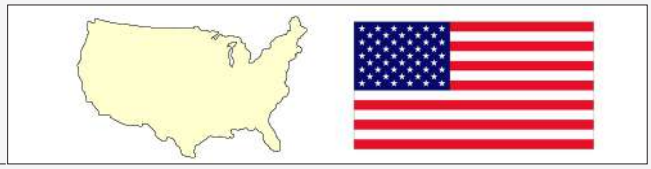

OF1
ORFS FEMALE STRAIGHT

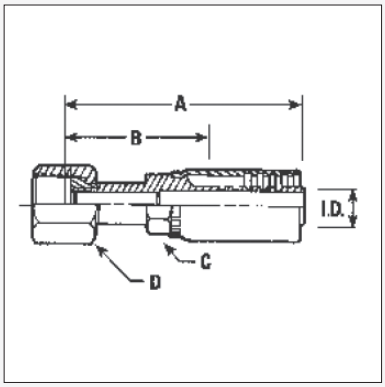

Product Code	ORFS Thread			Nominal ID			Dimensions mm					Synflex Data [a]	
	Thread	Size	Pipe	DN	Inch	Size	A	B	C	D	ID	Synflex Code	Pusher 4599-
OF1-0404S7	9/16" - 18	4	4	6	1/4"	4	66.0	38.1	15.9	17.5	4.0	90304-044000	MP045
OF1-0606S7	11/16" - 16	6	6	10	3/8"	6	69.9	36.5	19.1	22.2	7.1	90306-064000	SP031
OF1-0808S7	13/16" - 16	8	8	12	1/2"	8	79.4	39.7	23.8	27.0	9.9	90308-084000	FP040

[a] The requisite Synflex Die is dependent on which hose is used. Refer to Catalogue Section B Thermoplastic Hoses for the appropriate Synflex Die No.

OF9
ORFS FEMALE 90° ELBOW

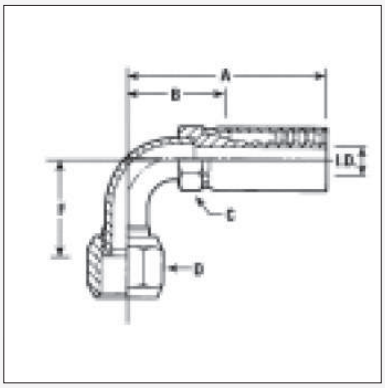

Product Code	ORFS Thread			Nominal ID			Dimensions mm					Synflex Data [a]	
	Thread	Size	Pipe	DN	Inch	Size	A	B	D	F	ID	Synflex Code	Pusher 4599-
OF9-0404S7	9/16" - 18	4	4	6	1/4"	4	58.7	31.7	17.5	19.8	4.0	90304-0440S0	TP204
OF9-0606S7	11/16" - 16	6	6	10	3/8"	6	83.8	50.8	20.6	22.9	7.1	90306-0640S0	TP206
OF9-0808S7	13/16" - 16	8	8	12	1/2"	8	77.3	38.1	23.8	29.2	9.9	90308-0840S0	TP308

[a] The requisite Synflex Die is dependent on which hose is used. Refer to Catalogue Section B Thermoplastic Hoses for the appropriate Synflex Die No.

This page is part of a complete catalogue containing technical and safety data.
All data must be reviewed when selecting a product.
Pirtek reserve the right to change technical specifications without notice

METRIC
ORIGIN: GERMANY

DLF1 / DSF1
DKL LIGHT / DKS HEAVY
FEMALE STRAIGHT

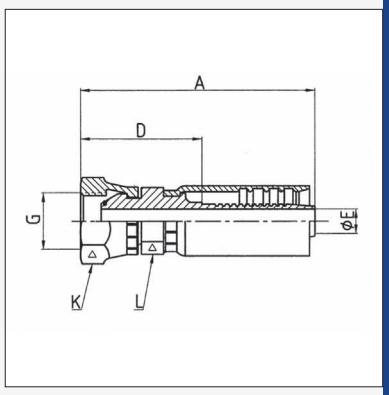

Product Code	Metric Thread			Nominal ID			Dimensions mm					Synflex Data [a]	
	G	Size	Pipe	DN	Inch	Size	A	D	L	K	Ø E	Synflex Code	Pusher 4599-
DLF1 LIGHT SERIES (DKL)													
DLF1-1604S7	M16 x 1.5	16	10L	6	1/4"	04	60	34.7	17	19	4	90304-16JL00	FP503
DLF1-1605S7	M16 x 1.5	16	10 L	08	5/16""	05	63	35	17	19	5.6	90305-16JL00	FP503
DLF1-1805S7	M18 x 1.5	18	12 L	08	5/16""	05	63	35	17	22	5.6	90305-18JL00	FP503
DLF1-1806S7	M18 x 1.5	18	12 L	10	3/8"	06	67.8	35.8	17	22	7.1	90306-18JL00	FP503
DSF1 HEAVY SERIES (DKS)													
DSF1-2005S7	M20 x 1.5	20	12 S	08	5/16""	05	64.7	36.7	18	24	5.6	90305-20JL00	FP504

[a] The requisite Synflex Die is dependent on which hose is used. Refer to Catalogue Section B Thermoplastic Hoses for the appropriate Synflex Die No.

DSM1
DKS HEAVY
MALE STRAIGHT

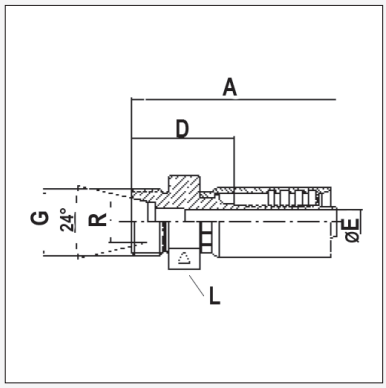

Product Code	DKS Thread			Nominal ID			Dimensions mm					Synflex Data [a]	
	G	Size	Pipe	DN	Inch	Size	A	D	L	R	Ø E	Synflex Code	Pusher 4599-
DSM1 HEAVY SERIES (DKS)													
DSM1-2005S7	M20 x 1.5	20	12 S	08	5/16""	05	61.6	33.6	24	12	5.6	90305-20SS00	MP505
DSM1-1806S7	M18 x 1.5	18	10S	10	3/8"	06	63.5	31.5	22	12	7.1	90306-18SL00	MP504

[a] The requisite Synflex Die is dependent on which hose is used. Refer to Catalogue Section B Thermoplastic Hoses for the appropriate Synflex Die No.

INFORMATION:
DKL = Dicht Kegel Leicht meaning Sealing Cone Light (Cone included angle is 24°)
DKS = Dicht Kegel Schwer meaning Sealing Cone Heavy (Cone included angle is 24°)

STANDPIPES
ORIGIN: GERMANY

SPM1
METRIC STANDPIPE
STRAIGHT

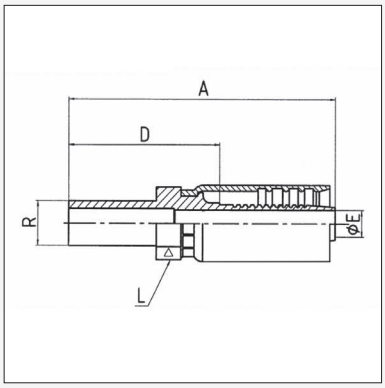

Product Code	Standpipe			Nominal ID			Dimensions mm					Synflex Data [a]	
	R	Size	Pipe	DN	Inch	Size	A	D	L	R	Ø E	Synflex Code	Pusher 4599-
SPM1-0603S7	6	06	6 L/S	05	3/16”	03	58.3	39.3	14	6	2.8	90303-06N000	MP501
SPM1-0804S7	8	08	8 L/S	06	1/4”	04	64.4	38.4	14	8	4.0	90304-08N000	MP501
SPM1-1004S7	10	10	10 L/S	06	1/4”	04	66.4	40.4	14	10	4.0	90304-10N000	MP501
SPM1-1005S7	10	10	10 L/S	08	5/16”	05	70.6	42.6	17	10	5.6	90305-10N000	MP502
SPM1-1006S7	10	10	10 L/S	10	3/8”	06	75.5	43.5	17	10	7.1	90306-10N000	MP502
SPM1-1205S7	12	12	12 L/S	08	5/16”	05	71.6	43.6	17	12	5.6	90305-12N000	MP502
SPM1-1206S7	12	12	12 L/S	10	3/8”	06	76.5	44.5	17	12	7.1	90306-12N000	MP502
SPM1-1508S7	15	15	15 L	12	1/2”	08	85.3	47.3	22	15	9.9	90308-15N000	MP504
SPM1-1608S7	16	16	16 S	12	1/2”	08	87.3	49.3	22	16	9.9	90308-16N000	MP504
SPM1-1808S7	18	18	18 L	16	5/8”	10	88.3	50.3	22	18	9.9	90308-18N000	MP504

[a] The requisite Synflex Die is dependent on which hose is used. Refer to Catalogue Section B Thermoplastic Hoses for the appropriate Synflex Die No.

SPM4
METRIC STANDPIPE
45° ELBOW

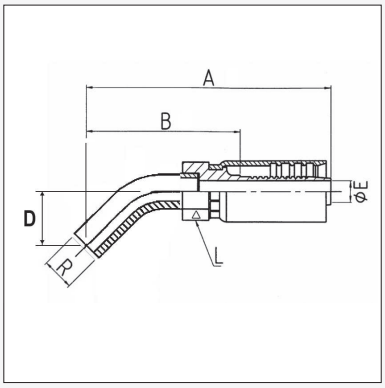

Product Code	Standpipe			Nominal ID			Dimensions mm					Synflex Data [a]	
	R	Size	Pipe	DN	Inch	Size	A	B	L	D	R	Synflex Code	Pusher 4599-
SPM4-0603S7	6	06	6 L/S	05	3/16”	03	65.4	46.4	14	18.4	6	90303-06N040	TP204
SPM4-1004S7	10	10	10 L/S	06	1/4”	04	74	48	17	21.1	10	90304-10N040	TP206
SPM4-1005S7	10	10	10 L/S	08	5/16”	05	76	48	17	21.1	10	90305-10N040	TP206
SPM4-1205S7	12	12	12 L/S	08	5/16”	05	79.6	51.6	17	23	12	90305-12N040	TP210
SPM4-1206S7	12	12	12 L/S	10	3/8”	06	84.5	52.5	17	23	12	90306-12N040	TP210
SPM4-1808S7	18	18	18 L	16	5/8”	10	102	64	28	27	18	90308-18N040	TP312

[a] The requisite Synflex Die is dependent on which hose is used. Refer to Catalogue Section B Thermoplastic Hoses for the appropriate Synflex Die No.

PIRTEK

This page is part of a complete catalogue containing technical and safety data.
All data must be reviewed when selecting a product.
Pirtek reserve the right to change technical specifications without notice

STANDPIPES
ORIGIN: GERMANY

SPM9
METRIC STANDPIPE
90° ELBOW

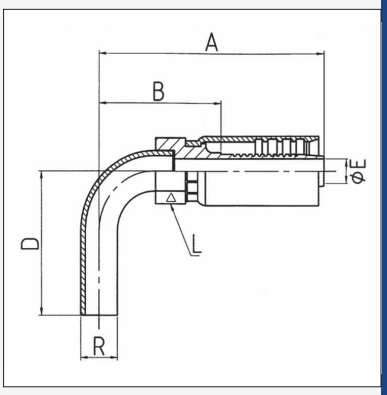

Product Code	Standpipe			Nominal ID			Dimensions mm					Synflex Data [a]	
	R	Size	Pipe	DN	Inch	Size	A	B	L	D	R	Synflex Code	Pusher 4599-
SPM9-0603S7	6	06	6 L/S	05	3/16”	03	53	34	14	32	6	90303-06N090	TP204
SPM9-0804S7	8	08	8 L/S	06	1/4”	04	59	33	17	34	8	90304-08N090	TP205
SPM9-1004S7	10	10	10 L/S	06	1/4”	04	61	35	17	38	10	90304-10N090	TP206
SPM9-1005S7	10	10	10 L/S	08	5/16”	05	63.2	35.2	17	38	10	90305-10N090	TP206
SPM9-1205S7	12	12	12 L/S	08	5/16”	05	67.2	39.2	17	43	12	90305-12N090	TP210
SPM9-1206S7	12	12	12 L/S	10	3/8”	06	72	40	17	43	12	90306-12N090	TP210
SPM9-1508S7	15	15	15 L	12	1/2”	08	82	44	22	48	15	90308-15N090	TP310
SPM9-1808S7	18	18	18 L	16	5/8”	10	91	53	28	54	18	90308-18N090	TP312

[a] The requisite Synflex Die is dependent on which hose is used. Refer to Catalogue Section B Thermoplastic Hoses for the appropriate Synflex Die No.

BSP

ORIGIN: GREAT BRITAIN

BF1

BSPP FEMALE STRAIGHT
INCORPORATES O-RING SEAL

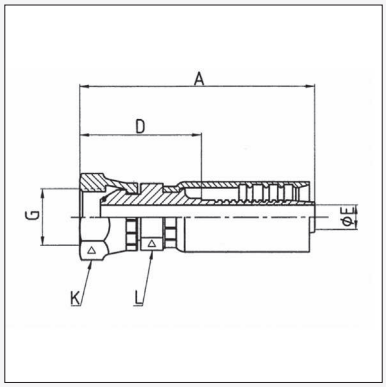

Product Code	BSPP Thread			Nominal ID			Dimensions mm					Synflex Data [a]	
	G	Size	Pipe	DN	Inch	Size	A	D	L	K	Ø E	Synflex Code	Pusher 4599-
BF1-0404S8	1/4" - 19	04	1/4"	6	1/4"	04	58.8	32.8	14	19	3.96	90H04-04B000	FP002
BF1-0606S8	3/8" - 19	06	3/8"	10	3/8"	06	67.8	35.8	17	22	7.14	90H06-06B000	FP503
BF1-0808S8	1/2" - 14	08	1/2"	12	1/2"	08	77.4	39.4	22	27	9.93	90H08-08B000	FP505
BF1-1212S8	3/4" - 14	12	3/4"	20	3/4"	12	86.9	43.9	28	32	15.88	90H12-12B000	FP506
BF1-1616S8	1" - 11	16	1"	25	1"	16	101.7	44.7	36	41	20.65	90H16-16B000	FP508

[a] The requisite Synflex Die is dependent on which hose is used. Refer to Catalogue Section B Thermoplastic Hoses for the appropriate Synflex Die No.

BFC9

BSPP FEMALE COMPACT 90° ELBOW
INCORPORATES O-RING SEAL

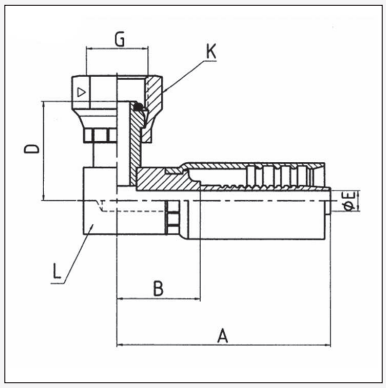

Product Code	BSPP Thread			Nominal ID			Dimensions mm					Synflex Data [a]	
	G	Size	Pipe	DN	Inch	Size	A	B	D	K	Ø E	Synflex Code	Pusher 4599-
BFC9-0606S8	3/8" - 19	06	3/8"	10	3/8"	06	57.5	25.5	27	21	7.14	90H06-06B0B0	PC602

[a] The requisite Synflex Die is dependent on which hose is used. Refer to Catalogue Section B Thermoplastic Hoses for the appropriate Synflex Die No.

PIRTEK

This page is part of a complete catalogue containing technical and safety data.
All data must be reviewed when selecting a product.
Pirtek reserve the right to change technical specifications without notice

NPT / NPSM
ORIGIN: NORTH AMERICA

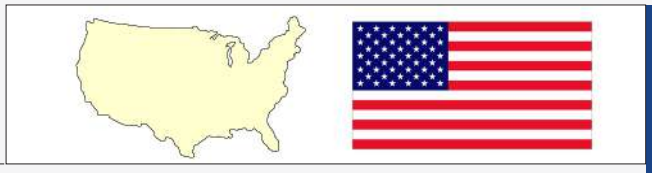

NF1
NPSM FEMALE STRAIGHT

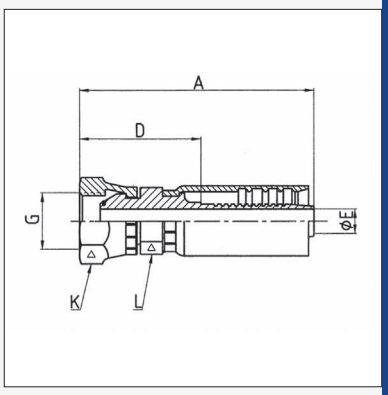

Product Code	NPSM Thread			Nominal ID			Dimensions mm					Synflex Data [a]	
	G	Size	Pipe	DN	Inch	Size	A	D	L	K	Ø E	Synflex Code	Pusher 4599-
NF1-0404S8	1/4" - 18	04	1/4"	6	1/4"	04	60.3	33.3	15.9	19.1	4.0	90H04-042400	FP002
NF1-0606S8	3/8" - 18	06	3/8"	10	3/8"	06	67.5	30.2	15.9	19.1	7.1	90H06-062400	FP004
NF1-0808S8	1/2" - 14	08	1/2"	12	1/2"	08	77.8	34.9	25.4	25.4	9.9	90H08-082400	FP018
NF1-1616S8	1" - 11½	16	1"	25	1"	16	103.1	42.9	34.9	38.1	20.6	90H16-162400	FP009

[a] The requisite Synflex Die is dependent on which hose is used. Refer to Catalogue Section B Thermoplastic Hoses for the appropriate Synflex Die No.

NM1
NPT MALE STRAIGHT

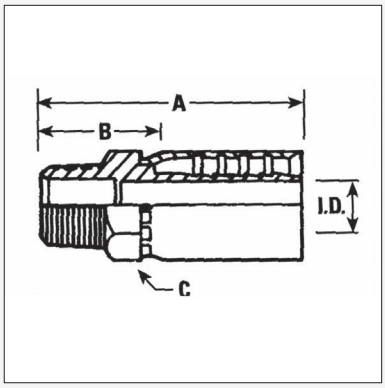

Product Code	NPT Thread			Nominal ID			Dimensions mm					Synflex Data [a]	
	Thread	Size	Pipe	DN	Inch	Size	A	B	C	ID		Synflex Code	Pusher 4599-
NM1-0403S8	1/4" - 18	4	1/4"	5	3/16"	3	52.3	31.8	17.5	2.8		90H03-041000	MP004
NM1-0606S8	3/8" - 18	6	3/8"	10	3/8"	6	65.8	33.3	19.1	7.1		90H06-061000	MP005
NM1-0608S8	3/8" - 18	6	3/8"	12	1/2"	8	70.7	31.7	22.2	9.9		90H08-061000	MP008
NM1-0808S8	1/2" - 14	8	1/2"	12	1/2"	8	77.0	38.1	23.8	9.9		90H08-081000	MP009
NM1-1212S8	3/4" - 14	12	3/4"	20	3/4"	12	81.8	34.9	28.6	15.9		90H12-121000	MP011
NM1-1616S8	1" - 11½	16	1"	25	1"	16	100.8	41.3	34.9	20.6		90H16-161000	MP013

[a] The requisite Synflex Die is dependent on which hose is used. Refer to Catalogue Section B Thermoplastic Hoses for the appropriate Synflex Die No.

JIC
ORIGIN: NORTH AMERICA

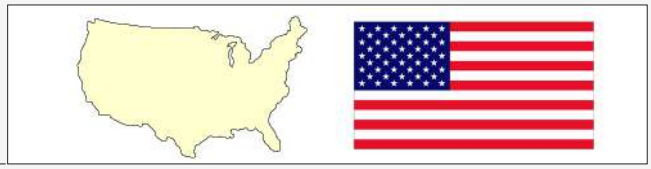

JF1
JIC FEMALE STRAIGHT

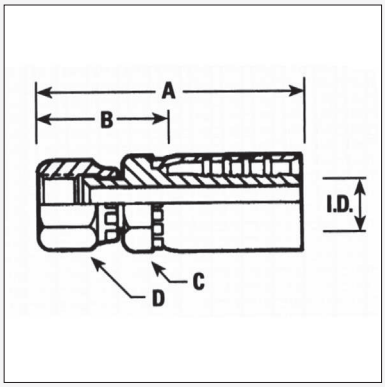

Product Code	JIC Thread			Nominal ID			Dimensions mm					Synflex Data [a]	
	Thread	Size	Pipe	DN	Inch	Size	A	B	C	D	ID	Synflex Code	Pusher 4599-
JF1-0703S8	7/16" - 20	07	04	5	3/16"	03	54.8	34.9	14.3	15.9	2.8	90H03-045400	FP011
JF1-0704S8	7/16" - 20	07	04	6	1/4"	04	64.3	36.5	15.9	15.9	4.0	90H04-045400	FP012
JF1-0904S8	9/16" - 18	09	06	6	1/4"	04	64.3	36.5	15.9	19.1	4.0	90H04-065500	FP013
JF1-0906S8	9/16" - 18	09	06	10	3/8"	06	71.5	38.1	19.1	19.1	7.1	90H06-065500	FP015
JF1-1206S8	3/4" - 16	12	08	10	3/8"	06	71.5	34.9	19.1	23.8	7.1	90H06-085400	FP005
JF1-1208S8	3/4" - 16	12	08	12	1/2"	08	80.2	41.3	22.2	23.8	9.9	90H08-085400	FP016
JF1-1408S8	7/8" - 14	14	10	12	1/2"	08	80.2	41.3	22.2	27.0	9.9	90H08-105400	FP006
JF1-1710S8	1.1/16" - 12	17	12	16	5/8"	10	87.7	42.3	28.6	31.9	11.9	90H10-125500	FP008
JF1-1712S8	1.1/16" - 12	17	12	20	3/4"	12	87.3	41.3	28.6	31.9	15.9	90H12-125500	FP008
JF1-2116S8	1.5/16" - 12	21	16	25	1"	16	103.2	42.9	34.9	38.1	20.6	90H16-165500	FP009

[a] The requisite Synflex Die is dependent on which hose is used. Refer to Catalogue Section B Thermoplastic Hoses for the appropriate Synflex Die No.

JM1
JIC MALE STRAIGHT

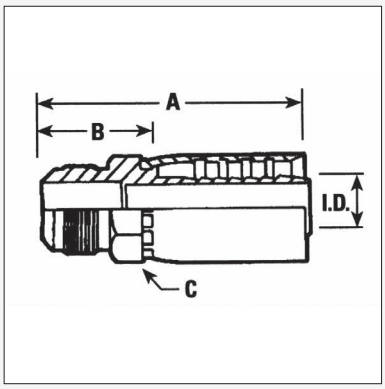

Product Code	JIC Thread			Nominal ID			Dimensions mm					Synflex Data [a]	
	Thread	Size	Pipe	DN	Inch	Size	A	B	C	ID		Synflex Code	Pusher 4599-
JM1-0906S8	9/16" - 18	9	6	10	3/8"	6	65.7	28.6	19.1	7.1		90H06-065000	MP005
JM1-1206S8	3/4" - 16	12	8	10	3/8"	6	68.3	31.8	20.6	7.1		90H06-085000	MP007
JM1-1208S8	3/4" - 16	12	8	12	1/2"	8	73.1	31.8	22.2	9.9		90H08-085000	MP008

[a] The requisite Synflex Die is dependent on which hose is used. Refer to Catalogue Section B Thermoplastic Hoses for the appropriate Synflex Die No.

This page is part of a complete catalogue containing technical and safety data.
All data must be reviewed when selecting a product.
Pirtek reserve the right to change technical specifications without notice

JIC
ORIGIN: NORTH AMERICA

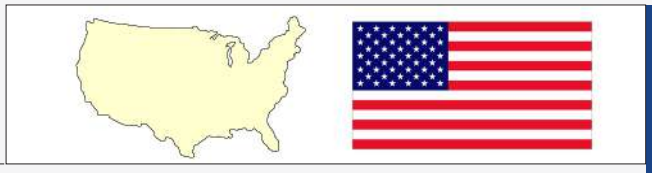

JF9
JIC FEMALE 90° ELBOW

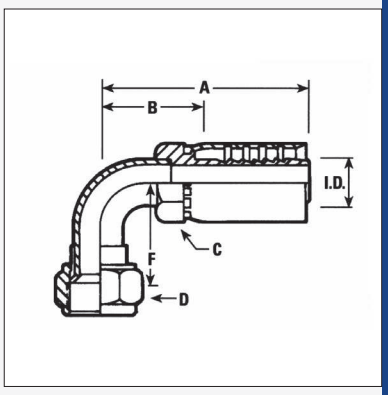

Product Code	JIC Thread			Nominal ID			Dimensions mm					Synflex Data [a]	
	Thread	Size	Pipe	DN	Inch	Size	A	B	F	D	ID	Synflex Code	Pusher 4599-
JF9-0704S8	7/16" - 20	7	4	6	1/4"	4	70.0	42.9	17.3	14.3	4.0	90H04-0455S0	TP204
JF9-1206S8	3/4" - 16	12	8	10	3/8"	6	84.8	50.8	27.7	22.2	7.1	90H08-0855S0	TP208

[a] The requisite Synflex Die is dependent on which hose is used. Refer to Catalogue Section B Thermoplastic Hoses for the appropriate Synflex Die No.

SAE
ORIGIN: NORTH AMERICA

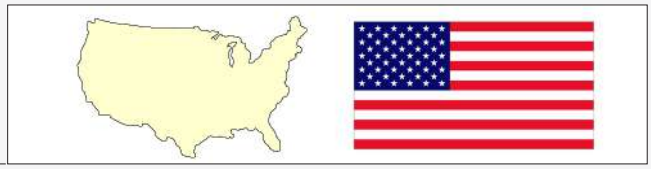

SF1
SAE FEMALE STRAIGHT

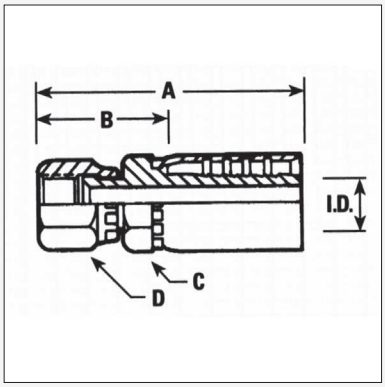

Product Code	JIC Thread			Nominal ID			Dimensions mm					Synflex Data [a]	
	Thread	Size	Pipe	DN	Inch	Size	A	B	C	D	ID	Synflex Code	Pusher 4599-
SF1-1006S8	5/8" - 18	10	06	10	3/8"	06	71.5	34.9	19.1	20.6	7.1	90H06-06A000	FP014

[a] The requisite Synflex Die is dependent on which hose is used. Refer to Catalogue Section B Thermoplastic Hoses for the appropriate Synflex Die No.

This page is part of a complete catalogue containing technical and safety data.
All data must be reviewed when selecting a product.
Pirtek reserve the right to change technical specifications without notice

METRIC
ORIGIN: GERMANY

DLF1
DKL LIGHT
FEMALE STRAIGHT

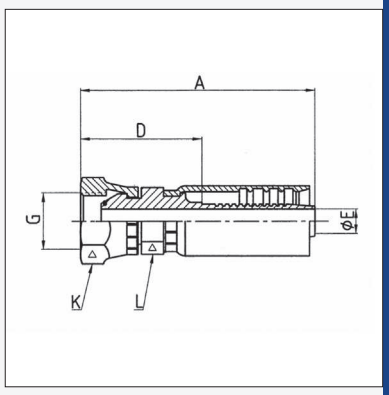

Product Code	Metric Thread			Nominal ID			Dimensions mm					Synflex Data [a]	
	G	Size	Pipe	DN	Inch	Size	A	D	L	K	Ø E	Synflex Code	Pusher 4599-
DLF1-1806S8	M18 x 1.5	18	12 L	10	3/8”	06	63	35.8	17	22	7.1	90H06-18JL00	FP503
DLF1-2208S8	M22 x 1.5	22	15 L	12	1/2”	08	77.4	39	22	27	9.9	90H08-22JL00	FP505

[a] The requisite Synflex Die is dependent on which hose is used. Refer to Catalogue Section B Thermoplastic Hoses for the appropriate Synflex Die No.

DLM1
DKL LIGHT
MALE STRAIGHT

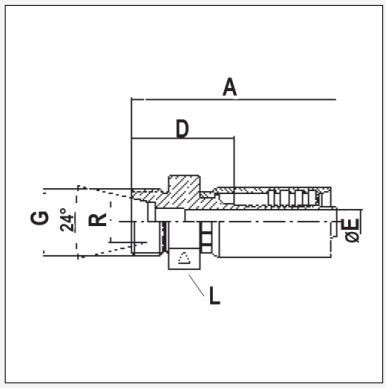

Product Code	DKS Thread			Nominal ID			Dimensions mm					Synflex Data [a]	
	G	Size	Pipe	DN	Inch	Size	A	D	L	R	Ø E	Synflex Code	Pusher 4599-
DLM1-2206S8	M22 x 1.5	22	15 L	10	3/8”	06	66.5	34.5	26	15	7.1	90H06-22SL00	MP506

[a] The requisite Synflex Die is dependent on which hose is used. Refer to Catalogue Section B Thermoplastic Hoses for the appropriate Synflex Die No.

METRIC
ORIGIN: GERMANY

DSF1
DKS HEAVY
FEMALE STRAIGHT

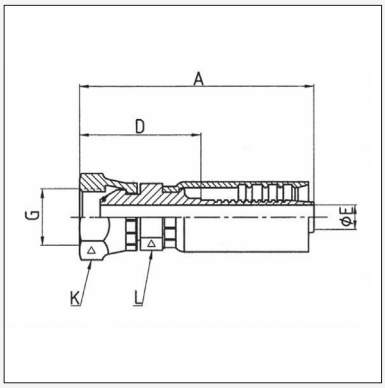

Product Code	Metric Thread			Nominal ID			Dimensions mm					Synflex Data [a]	
	G	Size	Pipe	DN	Inch	Size	A	D	L	K	Ø E	Synflex Code	Pusher 4599-
DSF1-2006S8	M20 x 1.5	20	12 S	10	3/8"	06	69.5	37.5	18	24	7.1	90H06-20JS00	FP504

[a] The requisite Synflex Die is dependent on which hose is used. Refer to Catalogue Section B Thermoplastic Hoses for the appropriate Synflex Die No.

DSM1
DKS HEAVY
MALE STRAIGHT

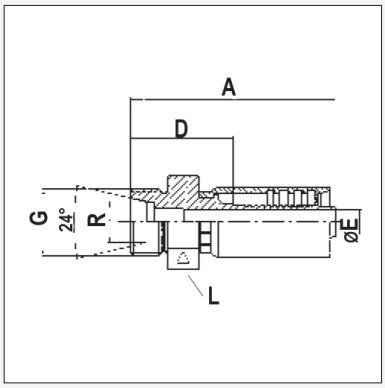

Product Code	DKS Thread			Nominal ID			Dimensions mm					Synflex Data [a]	
	G	Size	Pipe	DN	Inch	Size	A	D	L	R	Ø E	Synflex Code	Pusher 4599-
DSM1-2006S8	M20 x 1.5	20	12 S	10	3/8"	06	66.5	34.5	24	12	7.1	90H06-20SS00	MP505

[a] The requisite Synflex Die is dependent on which hose is used. Refer to Catalogue Section B Thermoplastic Hoses for the appropriate Synflex Die No.

PIRTEK

This page is part of a complete catalogue containing technical and safety data.
All data must be reviewed when selecting a product.
Pirtek reserve the right to change technical specifications without notice

STANDPIPES
ORIGIN: GERMANY

SPM1
METRIC STANDPIPE
STRAIGHT

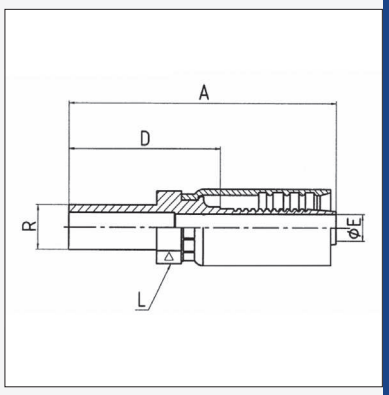

Product Code	Standpipe			Nominal ID			Dimensions mm					Synflex Data [a]	
	R	Size	Pipe	DN	Inch	Size	A	D	L	R	Ø E	Synflex Code	Pusher 4599-
SPM1-1004S8	10	10	10 L/S	06	1/4”	04	66.4	40.4	14	10	4.0	90H04-10N000	MP501
SPM1-1206S8	12	12	12 L/S	10	3/8”	06	76.5	44.5	17	12	7.1	90H06-12N000	MP502
SPM1-1508S8	15	15	15 L	12	1/2”	08	85.3	47.3	22	15	9.9	90H08-15N000	MP504

[a] The requisite Synflex Die is dependent on which hose is used. Refer to Catalogue Section B Thermoplastic Hoses for the appropriate Synflex Die No.

SPM4
METRIC STANDPIPE
45° ELBOW

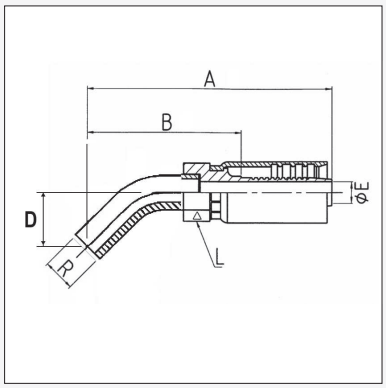

Product Code	Standpipe			Nominal ID			Dimensions mm					Synflex Data [a]	
	R	Size	Pipe	DN	Inch	Size	A	B	L	D	R	Synflex Code	Pusher 4599-
SPM4-1004S8	10	10	10 L/S	06	1/4”	04	74	48	17	21.1	10	90H04-10N040	TP206

[a] The requisite Synflex Die is dependent on which hose is used. Refer to Catalogue Section B Thermoplastic Hoses for the appropriate Synflex Die No.

SPM9
METRIC STANDPIPE
90° ELBOW

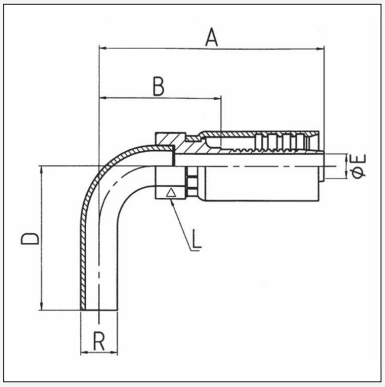

Product Code	Standpipe			Nominal ID			Dimensions mm					Synflex Data [a]	
	R	Size	Pipe	DN	Inch	Size	A	B	L	D	R	Synflex Code	Pusher 4599-
SPM9-1004S8	10	10	10 L/S	06	1/4”	04	61	35	17		10	90H04-10N090	TP206
SPM9-1206S8	12	12	12 L/S	10	3/8”	06	72	40	17		12	90H06-12N090	TP210
SPM9-1508S8	15	15	15 L	12	1/2”	08	82	44	22		15	90H08-15N090	TP310

[a] The requisite Synflex Die is dependent on which hose is used. Refer to Catalogue Section B Thermoplastic Hoses for the appropriate Synflex Die No.

PIRTEK

This page is part of a complete catalogue containing technical and safety data.
All data must be reviewed when selecting a product.
Pirtek reserve the right to change technical specifications without notice

JIC
ORIGIN: NORTH AMERICA

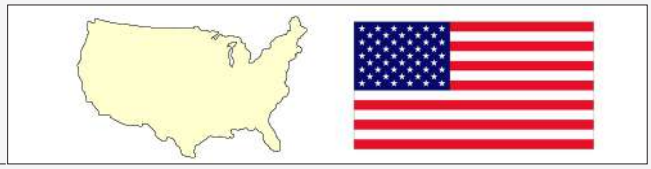

JF1
JIC FEMALE STRAIGHT

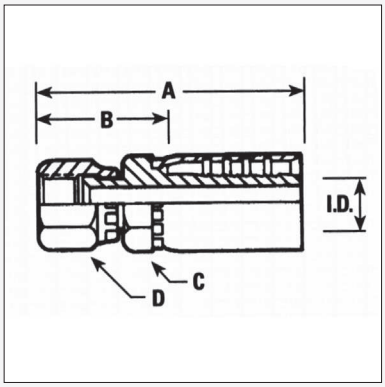

Product Code	JIC Thread			Nominal ID			Dimensions mm					Synflex Data [a]	
	Thread	Size	Pipe	DN	Inch	Size	A	B	C	D	ID	Synflex Code	Pusher 4599-
JF1-1410S18	7/8" - 14	14	10	16	5/8"	10	87.8	47.6	28.6	27.0	11.9	90N10-105400	FP021
JF1-1710S18	1.1/16"-12	17	12	16	5/8"	10	87.8	47.6	28.6	31.8	11.9	90N10-125500	FP008

[a] The requisite Synflex Die is dependent on which hose is used. Refer to Catalogue Section B Thermoplastic Hoses for the appropriate Synflex Die No.

PIRTEK

This page is part of a complete catalogue containing technical and safety data.
All data must be reviewed when selecting a product.
Pirtek reserve the right to change technical specifications without notice

FITTINGS TO SUIT 3VEO
ASSEMBLY BY ACCREDITED PERSONS

All SV Series fittings must be assembled only by accredited personnel

JF1
JIC FEMALE STRAIGHT

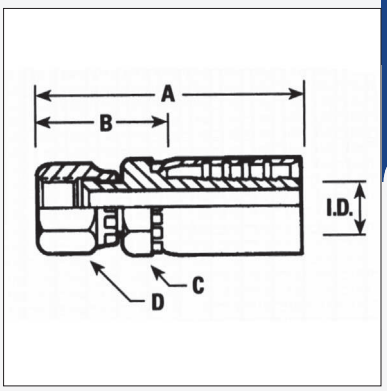

Product Code	JIC Thread			Nominal ID			Dimensions mm					Synflex Data [a]	
	Thread	Size	Pipe	DN	Inch	Size	A	B	C	D	ID	Synflex Code	Pusher 4599-
JF1-0704SV	7/16" - 20	07	04	6	1/4"	04	64.3	36.5	15.9	15.9	3.6	90V04-045400	FP012
JF1-0906SV	9/16" - 18	09	06	10	3/8"	06	74.2	41.3	19.1	19.1	6.8	90V06-065500	FP015
STAINLESS STEEL FITTINGS													
JF1SS-0704SV	7/16" - 20	07	04	6	1/4"	04	64.3	36.5	15.9	15.9	3.6	9CV04-045400	FP012
JF1SS-0906SV	9/16" - 18	09	06	10	3/8"	06	74.2	41.3	19.1	19.1	6.8	9DV06-065500	FP015

[a] The requisite Synflex Die is dependent on which hose is used. Refer to Catalogue Section B Thermoplastic Hoses for the appropriate Synflex Die No.

NM1
NPT MALE STRAIGHT

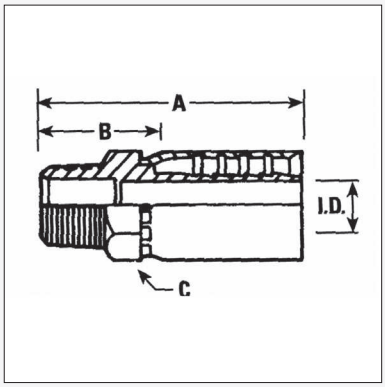

Product Code	NPT Thread			Nominal ID			Dimensions mm					Synflex Data [a]	
	Thread	Size	Pipe	DN	Inch	Size	A	B	C	ID		Synflex Code	Pusher 4599-
NM1-0404SV	1/4" - 18	4	1/4"	6	1/4"	04	58.7	31.8	17.5	3.6		90V04-041000	MP004
NM1-0406SV	1/4" - 18	4	1/4"	10	3/8"	06	68.6	34.9	19.1	6.8		90V06-041000	MP005
NM1-0604SV	3/8" - 18	6	3/8"	6	1/4"	04	61.1	33.3	19.1	3.6		90V04-061000	MP005
NM1-0606SV	3/8" - 18	6	3/8"	10	3/8"	06	68.6	34.9	19.1	6.8		90V06-061000	MP005
STAINLESS STEEL FITTINGS													
NM1SS-0606SV	3/8" - 18	6	3/8"	10	3/8"	06	68.6	34.9	19.1	6.8		9CV06-061000	MP005

[a] The requisite Synflex Die is dependent on which hose is used. Refer to Catalogue Section B Thermoplastic Hoses for the appropriate Synflex Die No.

Stainless Steel fittings are Grade 316