Clickonitemsbelowtobelinkedtothatpage

SECTION INDEX

			PAGE
1	STRAIGHT CONNECTORS		D 2
2	TEES / CROSSES		D 18
3	90° ELBOWS		D 31
4	45° ELBOWS		D 48
5	TUBE WELD		D 48
6	TUBE FITTINGS		D 62
7	PLUGS		D 62
8	CAPS		D 62
9	ADAPTOR UNIONS		D 71
10	ADAPTORS FIXED		D 71
11	REDUCING BUSHES		D 71
12	SOCKETS		D 71
13	FLANGE FITTINGS		D 84
14	SEALS & ACCESSORIES		D 84
15	ALPHANUMERIC INDEX		D 99

SECTION 1
STRAIGHT CONNECTORS

			PAGE
A	BSPP x BSPT	M / M	**D 3**
B	BSPP BULKHEAD	M / M	**D 3**
C	BSPP x JIC	M / M	**D 4**
AHN	BSPP x NPT	M / M	**D 4**
D	BSPT x BSPT	M / M	**D 5**
DN	BSPT x NPT	M / M	**D 5**
F	BSPT x JIC	M / M	**D 6**
H	UN`O´ x BSPT	M / M	**D 7**
HN	UN`O´ x NPTF	M / M	**D 7**
J	UN`O´ x JIC	M / M	**D 8**
K	UN`O´ x JIC EXT.	M / M	**D 9**
L	METRIC x JIC	M / M	**D 9**
M	NPTF x JIC	M / M	**D 10**
P	JIC x JIC	M / M	**D 11**
R	JIC BULKHEAD	M / M	**D 11**
AH	BSPP x BSPP	M / M	**D 12**
AM	BSPP x JIS BSPP	M / M	**D 12**
AN / ANHD	NPTF x NPTF	M / M	**D 13**
KA	JIS METRIC x BSPP	M / M	**D 13**
KF	JIS METRIC x BSPT	M / M	**D 14**
KP	JIS METRIC x JIS METRIC	M / M	**D 14**
PS	SAE INVERTED x JIC	M / M	**D 15**
FF1201	ORFS x BSPP	M / M	**D 15**
FF1202	ORFS x NPTF	M / M	**D 16**
FF1204	ORFS x ORFS	M / M	**D 16**
FF1231	ORFS x UN`O´	M / M	**D 17**
FF1260LN	ORFS BULKHEAD	M / M	**D 17**

PIRTEK

This page is part of a complete catalogue containing technical and safety data.
All data must be reviewed when selecting a product.
Pirtek reserve the right to change technical specifications without notice

STRAIGHT CONNECTORS

A SERIES
BSPP MALE x BSPT MALE

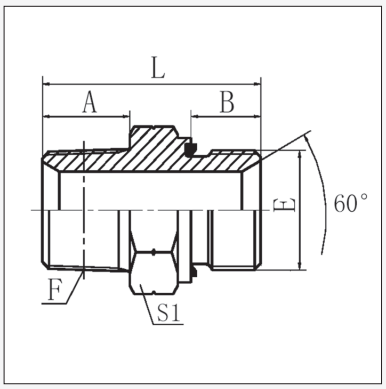

Product Code	Thread		Dimensions mm			
	E (BSPP)	F (BSPT)	A	B	L	S1
A-02-02	1/8" - 28	1/8" - 28	10	7.8	24.6	13.8
A-04-02	1/4" - 19	1/8" - 28	10	12	30	19
A-04-04	1/4" - 19	1/4" - 19	14.5	12	34.5	19
A-04-06	1/4" - 19	3/8" - 19	15	12	35	19
A-04-08	1/4" - 19	1/2" - 14	20	12	42	22
A-06-04	3/8" - 19	1/4" - 19	14.5	12	37	22
A-06-06	3/8" - 19	3/8" - 19	15	12	37.5	22
A-06-08	3/8" - 19	1/2" - 14	20	12	42.5	24
A-06-12	3/8" - 19	3/4" - 14	20	12	44.5	30
A-08-04	1/2" - 14	1/4" - 19	14.5	14	41.5	27
A-08-06	1/2" - 14	3/8" - 19	15	14	42	27
A-08-08	1/2" - 14	1/2" - 14	15	16	35	27
A-08-12	1/2" - 14	3/4" - 14	20	14	47	30
A-08-16	1/2" - 14	1" - 11	23	15	53	36
A-12-06	3/4" - 14	3/8" - 19	15	16	45	32
A-12-08	3/4" - 14	1/2" - 14	20	16	50	32
A-12-12	3/4" - 14	3/4" - 14	20	16	50	32
A-12-16	3/4" - 14	1" - 11	25.5	16	55.5	36
A-16-08	1" - 11	1/2" - 14	20.5	18	54	41
A-16-12	1" - 11	3/4" - 14	20.5	18	54	41
A-16-16	1" - 11	1" - 11	25.5	18	59.5	41
A-16-20	1" - 11	1.1/4" - 11	26.5	18	60.5	46
A-20-12	1.1/4"-11	3/4"-14	27	15	59	46
A-20-16	1.1/4" - 11	1" - 11				
A-20-20	1.1/4" - 11	1.1/4" - 11	26.5	20	64.5	50
A-20-24	1.1/4" - 11	1.1/2" - 11				
A-24-20	1.1/2" - 11	1.1/4" - 11	26.5	22	66.5	55
A-24-24	1.1/2" - 11	1.1/2" - 11				
A-32-32	2" - 11	2" - 11				

B SERIES
BSPP MALE BULKHEAD

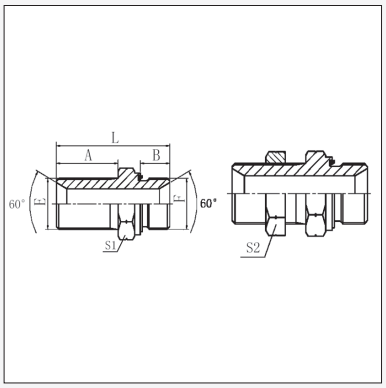

Product Code	Thread		Dimensions mm				
	E (BSPP)	F (BSPP)	A	B	L	S1	S2
B-02-02	1/8"-28	1/8"-28	33	10	49	14	14
B-04-04	1/4" - 19	1/4" - 19	35	12	55	19	19
B-06-06	3/8" - 19	3/8" - 19	35	12	57.5	22	22
B-08-08	1/2" - 14	1/2" - 14	39	14	66	27	27
B-12-12	3/4" - 14	3/4" - 14	42	16	72	32	32
B-16-16	1" - 11	1" - 11	50	18	84	41	41
B-20-20	1.1/4" - 11	1.1/4" - 11	52	20	90	50	50
B-24-24	1.1/2" - 11	1.1/2" - 11	56	22	96	55	55
B-32-32	2" - 11	2" - 11				70	70

STRAIGHT CONNECTORS

C SERIES
BSPP MALE x JIC MALE

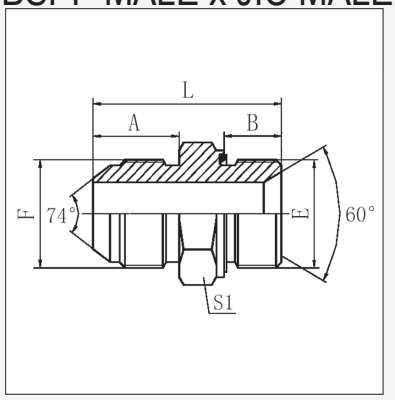

Product Code	Thread		Dimensions mm			
	E (BSPP)	F (JIC)	A	B	L	S1
C-02-07	1/8" - 28	7/16" - 20	14	8	29.5	14
C-02-09	1/8" - 28	9/16" - 18	14.1	8	29.5	17
C-04-07	1/4" - 19	7/16" - 20	14	12	34	19
C-04-08	1/4" - 19	1/2"-14	14	12	34	19
C-04-09	1/4" - 19	9/16" - 18	14.1	12	34	19
C-04-12	1/4" - 19	3/4" - 16	16.7	12	37	22
C-06-07	3/8" - 19	7/16" - 20	14	12	34.5	22
C-06-09	3/8" - 19	9/16" - 18	14.1	12	34.5	22
C-06-12	3/8" - 19	3/4" - 16	16.7	12	37.5	22
C-06-12-070	3/8"-19	3/4"-16	16.7	12	70	22
C-06-12-095	3/8"-19	3/4"-16	16.7	12	95	22
C-06-14	3/8" - 19	7/8" - 14	19.3	12	41.5	24
C-06-17	3/8" - 19	1.1/16" - 12	21.9	12	46	30
C-08-07	1/2"-14	7/16"-20	14	14	41	27
C-08-09	1/2" - 14	9/16" - 18	14.1	14	41	27
C-08-12	1/2" - 14	3/4" - 16	16.7	14	43.5	27
C-08-14	1/2" - 14	7/8" - 14	19.3	14	46.5	27
C-08-14-115	1/2"-14	7/8" - 14	19	14	115	27
C-08-17	1/2" - 14	1.1/16" - 12	21.9	14	48.5	30
C-12-09	3/4" - 14	9/16" - 18	14.1	16	42	32
C-12-12	3/4" - 14	3/4" - 16	16.7	16	45	32
C-12-14	3/4" - 14	7/8" - 14	19.3	16	47.5	32
C-12-17	3/4" - 14	1.1/16" - 12	21.9	16	50	32
C-12-19	3/4" - 14	1.3/16" - 12	22.6	16	51.6	32
C-12-21	3/4" - 14	1.5/16" - 12	23.1	16	53	36
C-16-12	1"-11	3/4"-16	16.7	18	48.3	41
C-16-14	1" - 11	7/8" - 14	19.3	18	49	41
C-16-17	1" - 11	1.1/16" - 12	21.9	18	56	41
C-16-21	1" - 11	1.5/16" - 12	23.1	18	57	41
C-16-26	1" - 11	1.5/8" - 12	24.3	18	58	46
C-20-17	1.1/4" - 11	1.1/16" - 12	21.9	20	60	50
C-20-21	1.1/4" - 11	1.5/16" - 12	23.1	20	61	50
C-20-26	1.1/4" - 11	1.5/8" - 12	24.3	20	62	50
C-20-30	1.1/4" - 11	1.7/8" - 12	27.5	20	65.5	50
C-24-21	1.1/2"-11	1.5/16"-12	23.1	22	63	55
C-24-26	1.1/2" - 11	1.5/8" - 12	24.3	22	64	55
C-24-30	1.1/2" - 11	1.7/8" - 12	27.5	22	64	55
C-32-40	2" - 11	2.1/2" - 12	34	20	73	75

AHN SERIES
BSPP MALE x NPT MALE

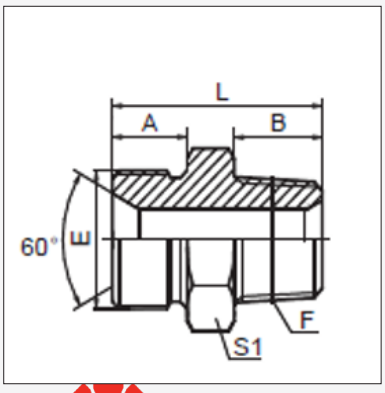

Product Code	Thread		Dimensions mm			
	E (BSPP)	F (NPT)	A	B	L	S1
AHN-02-02	1/8"-28	1/8"-27	10	10.5	26	14
AHN-04-04	1/4"-19	1/4"-18	12	15	31	17
AHN-06-06	3/8"-19	3/8"-18	13.5	16	37.5	22
AHN-08-08	1/2"-14	1/2"-14	16	19.5	45.5	27
AHN-12-12	3/4"-14	3/4"-14	18.5	19.5	49	32
AHN-16-16	1"-11	1"-11.5	20.5	25.5	59	41
AHN-20-20	1.1/4"-11	1.1/4"-11.5	20.5	26.5	62	50

This page is part of a complete catalogue containing technical and safety data.
All data must be reviewed when selecting a product.
Pirtek reserve the right to change technical specifications without notice

STRAIGHT CONNECTORS

D SERIES
BSPT MALE x BSPT MALE

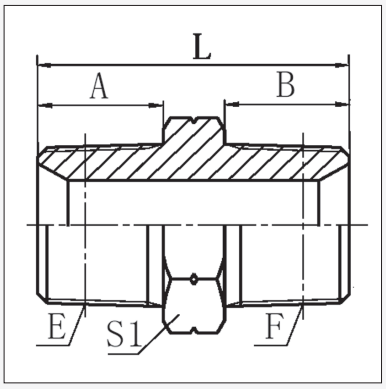

Product Code	Thread		Dimensions mm				
	E (BSPT)	F (BSPT)	A	B	L	S1	
D-02-02	1/8" - 28	1/8" - 28	10	10	26	12	
D-04-02	1/4" - 19	1/8" - 28	14.5	10	30.5	17	
D-04-04	1/4" - 19	1/4" - 19	14.5	14.5	34	17	
D-06-02	3/8" - 19	1/8" - 28	15	10	31	19	
D-06-04	3/8" - 19	1/4" - 19	15	14.5	35	19	
D-06-06	3/8" - 19	3/8" - 19	15	15	36	19	
D-08-04	1/2" - 14	1/4" - 19	20	15	43	22	
D-08-06	1/2" - 14	3/8" - 19	20	15	43	22	
D-08-08	1/2" - 14	1/2" - 14	20	20	46	22	
D-10-08	5/8" - 14	1/2" - 14					
D-10-10	5/8" - 14	5/8" - 14	19	19	46	24	
D-12-04	3/4" - 14	1/4" - 19	20	15	45	30	
D-12-06	3/4" - 14	3/8" - 19	20	15	44.5	30	
D-12-08	3/4" - 14	1/2" - 14	20	20	48	30	
D-12-10	3/4" - 14	5/8" - 14					
D-12-12	3/4" - 14	3/4" - 14	20	20	48	30	
D-16-06	1" - 11	3/8" - 19	25.5	16	51.5	36	
D-16-08	1" - 11	1/2" - 14	25.5	20	56.5	36	
D-16-12	1" - 11	3/4" - 14	25.5	20	55.5	36	
D-16-16	1" - 11	1" - 11	25.5	25.5	61	36	
D-20-12	1.1/4" - 11	3/4" - 14	26.5	20	58.5	46	
D-20-16	1.1/4" - 11	1" - 11	26.5	26.5	64.5	46	
D-20-20	1.1/4" - 11	1.1/4" - 11	26.5	26.5	65.5	46	
D-24-16	1.1/2" - 11	1" - 11	26.5	25.5	66	50	
D-24-20	1.1/2" - 11	1.1/4" - 11	26.5	26.5	67	50	
D-24-24	1.1/2" - 11	1.1/2" - 11	26.5	26.5	67	50	
D-32-24	2" - 11	1.1/2" - 11	30	26.5	71.5	65	
D-32-32	2" - 11	2" - 11	30	30	75	65	

DN SERIES
BSPT MALE X NPT MALE

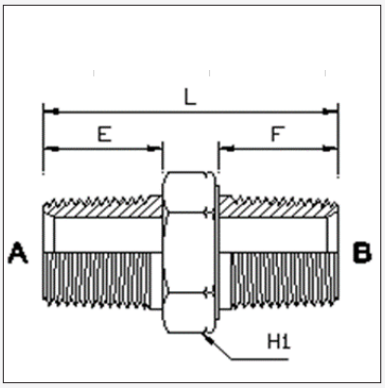

Product Code	Thread		Dimensions mm			
	A (BSPT)	B (NPT)	L	E	F	H1
DN-02-02	1/8"-28	1/8"-27	26	10	10	12
DN-04-04	1/4"-19	1/4"-18	34	15	15	14
DN-06-06	3/8"-19	3/8"-19	38	15	15	19
DN-08-08	1/2"-14	1/2"-14	47	19	20	22
DN-12-12	3/4"-12	3/4"-12	51	20	20	27
DN-16-16	1"-11	1"-11	62	25	25	38
DN-20-20	1.1/4"-11	1.1/4"-11	65	27	26	46
DN-24-24	1.1/2"-11	1.1/2"-11	67	27	26	50
DN-32-32	2"-11	2"-11	74	30	27	65

This page is part of a complete catalogue containing technical and safety data.
All data must be reviewed when selecting a product.
Pirtek reserve the right to change technical specifications without notice

STRAIGHT CONNECTORS

F SERIES
BSPT MALE x JIC MALE

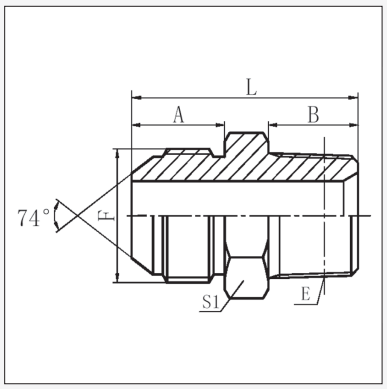

Product Code	Thread		Dimensions mm				
	E (BSPT)	F (JIC)	A	B	L	S1	
F-02-07	1/8" - 28	7/16" - 20	14	10	30	12	
F-02-07-046	1/8" - 28	7/16" - 20	14	10	46	12	
F-02-08	1/8" - 28	1/2" - 20					
F-02-09	1/8" - 28	9/16" - 18	14.1	10.5	30.5	17	
F-04-07	1/4" - 19	7/16" - 20	14	14.5	34.5	17	
F-04-08	1/4" - 19	1/2" - 20	14	14.5	34	17	
F-04-09	1/4" - 19	9/16" - 18	14.1	14.5	34	17	
F-04-10	1/4" - 19	5/8" - 18 †					
F-04-12	1/4" - 19	3/4" - 16	16.7	14.5	39	22	
F-06-07	3/8" - 19	7/16" - 20	14	15	35	19	
F-06-08	3/8" - 19	1/2" - 20	14	15	35	19	
F-06-09	3/8" - 19	9/16" - 18	14.1	15	34	19	
F-06-10	3/8" - 19	5/8" - 18 †					
F-06-12	3/8" - 19	3/4" - 16	16.7	15	39	22	
F-06-14	3/8" - 19	7/8" - 14	19.3	15	42.5	24	
F-06-17	3/8" - 19	1.1/16" - 12	21.9	15.5	47	30	
F-08-07	1/2" - 14	7/16" - 20	14	20	41	24	
F-08-09	1/2" - 14	9/16" - 18	14.1	20	41	22	
F-08-10	1/2" - 14	5/8" - 18 †					
F-08-12	1/2" - 14	3/4" - 16	16.7	20	44.5	22	
F-08-14	1/2" - 14	7/8" - 14	19.3	20	46.5	24	
F-08-17	1/2" - 14	1.1/16" - 12	21.9	20	51	30	
F-08-21	1/2" - 14	1.5/16" - 12	23	23	59	36	
F-12-09	3/4" - 14	9/16" - 18	14.1	20	43.5	30	
F-12-12	3/4" - 14	3/4" - 16	16.7	20	46	30	
F-12-14	3/4" - 14	7/8" - 14	19.3	20	48.5	30	
F-12-17	3/4" - 14	1.1/16" - 12	21.9	20	51	30	
F-12-19	3/4" - 14	1.3/16" - 12	22.6	20	52.5	32	
F-12-21	3/4" - 14	1.5/16" - 12	23.1	20	53	36	
C-16-14	1"-11	7/8"-14	19.3	18	49	41	
F-16-12	1" - 11	3/4" - 16	16.7	25.5	52	36	
F-16-14	1" - 11	7/8" - 14	19.3	25.5	54.5	36	
F-16-17	1" - 11	1.1/16" - 12	21.9	25.5	57.5	36	
F-16-19	1" - 11	1.3/16" - 12	22.6	25.5	58.5	36	
F-16-21	1" - 11	1.5/16" - 12	23.1	25.5	59	36	
F-16-26	1" - 11	1.5/8" - 12	24.3	25.5	62.5	46	
F-20-17	1.1/4" - 11	1.1/16" - 12	21.9	26.5	61.5	46	
F-20-21	1.1/4" - 11	1.5/16" - 12	23.1	26.5	61.5	46	
F-20-26	1.1/4" - 11	1.5/8" - 12	24.3	26.5	63	46	
F-20-30	1.1/4" - 11	1.7/8" - 12	27.5	26.5	67.5	50	
F-24-21	1.1/2" - 11	1.5/16" - 12	23.1	26.5	64.5	50	
F-24-26	1.1/2" - 11	1.5/8" - 12	24.3	26.5	66.5	50	
F-24-30	1.1/2" - 11	1.7/8" - 12	27.5	26.5	69.5	50	

† SAE Thread Form

PIRTEK

This page is part of a complete catalogue containing technical and safety data.
All data must be reviewed when selecting a product.
Pirtek reserve the right to change technical specifications without notice

STRAIGHT CONNECTORS

H SERIES
UN'O' MALE x BSPT MALE

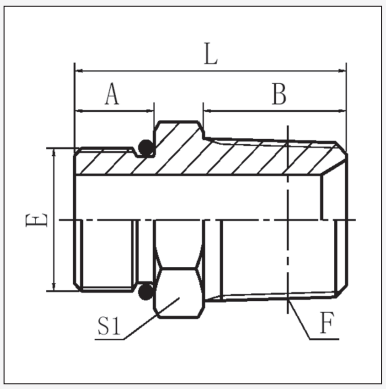

Product Code	Thread		Dimensions mm				
	E (UN'O')	F (BSPT)	A	B	L	S1	
H-07-04	7/16" - 20	1/4" - 19	9.2	14.9	29.7	15.8	
H-09-04	9/16" - 18	1/4" - 19	9.93	14.5	30	19	
H-09-06	9/16" - 18	3/8" - 19	9.93	15	30.5	19	
H-09-08	9/16" - 18	1/2" - 20	9.93	20	34	22	
H-12-04	3/4" - 16	1/4" - 19	11.13	14.5	33.5	22	
H-12-06	3/4" - 16	3/8" - 19	11.13	15	34	22	
H-12-08	3/4" - 16	1/2" - 20	11.13	20	38	22	
H-14-04	7/8" - 14	1/4" - 19	12.7	14.5	35	27	
H-14-06	7/8" - 14	3/8" - 19	12.7	15	37.5	27	
H-14-08	7/8" - 14	1/2" - 14	12.7	20	42.5	27	
H-17-08	1.1/16" - 12	1/2" - 14	15.09	20	46	32	
H-17-12	1.1/16" - 12	3/4" - 14	15.09	20	46	32	
H-17-16	1.1/16" - 12	1" - 11	15.09	25.5	51	32	
H-21-08	1.5/16" - 12	1/2" - 14	15.09	20	46	32	
H-21-12	1.5/16" - 12	3/4" - 14	15.09	20	46	38	
H-21-16	1.5/16" - 12	1" - 11	15.09	25.5	51	38	

HN SERIES
UN'O' MALE x NPT MALE

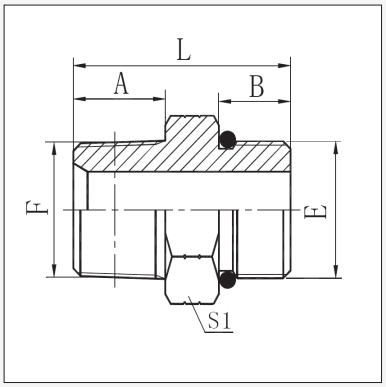

Product Code	Thread		Dimensions mm				
	E (UN'O')	F (NPT)	A	B	L	S1	
HN-07-02	7/16" - 20	1/8" - 27	10.5	9.1	27.5	14	
HN-12-04	3/4" - 16	1/4" - 18	14.5	11.5	34	22	
HN-17-16	1.1/16" - 12	1" - 11	24.7	15.3	54.2	35	
HN-21-16	1.5/16" - 12	1" - 11	25.5	15.1	52.8	38	

STRAIGHT CONNECTORS

J SERIES
UN'O' MALE x JIC MALE

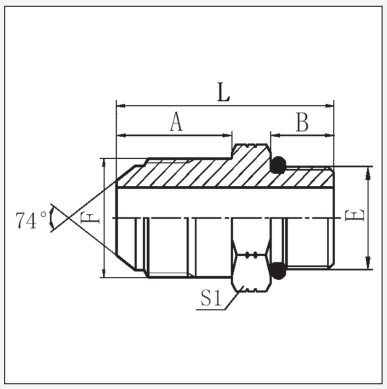

Product Code	Thread		Dimensions mm				
	E (UN'O')	F (JIC)	A	B	L	S1	
J-07-05	7/16" - 20	5/16" - 24	14	8.54	28.4	14	
J-07-07	7/16" - 20	7/16" - 20	14	9.14	29	14	
J-07-08	7/16" - 20	1/2" - 20	14	9.14	29	14	
J-07-09	7/16" - 20	9/16" - 18	14.1	9.14	29	17	
J-08-07	1/2" - 20	7/16" - 20	14	9.14	29	17	
J-08-08	1/2" - 20	1/2" - 20	14	9.14	29	17	
J-08-09	1/2" - 20	9/16" - 18	14.1	9.14	29.5	17	
J-08-12	1/2" - 20	3/4" - 16	17	9	38	22.23	
J-09-07	9/16" - 18	7/16" - 20	14	9.93	30	17	
J-09-08	9/16" - 18	1/2" - 20	14	9.93	30	17	
J-09-09	9/16" - 18	9/16" - 18	14.1	9.93	30	17	
J-09-12	9/16" - 18	3/4" - 16	16.7	9.93	35	22	
J-09-14	9/16" - 18	7/8" - 14	19.3	9.93	37	24	
J-12-07	3/4" - 16	7/16" - 20	14	11.13	33	22	
J-12-08	3/4" - 16	1/2" - 20	14	11.13	33	22	
J-12-09	3/4" - 16	9/16" - 18	14.1	11.13	33	22	
J-12-12	3/4" - 16	3/4" - 16	16.7	11.13	36	22	
J-12-14	3/4" - 16	7/8" - 14	19.3	11.13	39	24	
J-12-17	3/4" - 16	1.1/16" - 12	21.9	11.13	43	30	
J-14-09	7/8" - 14	9/16" - 18	14.1	12.7	37	27	
J-14-12	7/8" - 14	3/4" - 16	16.7	12.7	40	27	
J-14-14	7/8" - 14	7/8" - 14	19.3	12.7	42.5	27	
J-14-17	7/8" - 14	1.1/16" - 12	21.9	12.7	45	30	
J-17-07	1.1/16" - 12	7/16" - 20	14	15.09	40	32	
J-17-09	1.1/16" - 12	9/16" - 18	14.1	15.09	40	32	
J-17-12	1.1/16" - 12	3/4" - 16	16.7	15.09	43	32	
J-17-14	1.1/16" - 12	7/8" - 14	19.3	11.13	39	24	
J-17-17	1.1/16" - 12	1.1/16" - 12	21.9	15.09	48	32	
J-17-19	1.1/16" - 12	1.3/16" - 12	22.6	15.09	48.5	32	
J-17-21	1.1/16" - 12	1.5/16" - 12	21.9	15.09	48	38	
J-19-12	1.3/16" - 12	3/4" - 16	16.7	15.09	43	36	
J-19-14	1.3/16" - 12	7/8" - 14	19.3	15.09	45.5	36	
J-19-17	1.3/16" - 12	1.1/16" - 12	21.9	15.09	48	36	
J-19-19	1.3/16" - 12	1.3/16" - 12	22.6	15.09	48.5	36	
J-19-21	1.3/16" - 12	1.5/16" - 12	22.6	15.09	50.5	38	
J-21-12	1.5/16" - 12	3/4" - 16	16.7	15.09	42.5	38	
J-21-14	1.5/16" - 12	7/8" - 14	19.3	15.09	45.5	38	
J-21-17	1.5/16" - 12	1.1/16" - 12	21.9	15.09	48	38	
J-21-19	1.5/16" - 12	1.3/16" - 12	22.6	15.09	50.5	38	
J-21-21	1.5/16" - 12	1.5/16" - 12	23.1	15.09	49	38	
J-21-26	1.5/16" - 12	1.5/8" - 12	24.3	15.09	52.5	46	
J-26-17	1.5/8" - 12	1.1/16" - 12	21.9	15.09	52	50	
J-26-21	1.5/8" - 12	1.5/16" - 12	23.1	15.09	53	50	
J-26-26	1.5/8" - 12	1.5/8" - 12	24.3	15.09	54.5	50	
J-26-30	1.5/8" - 12	1.7/8" - 12	27.5	15.09	57.5	50	

PIRTEK

This page is part of a complete catalogue containing technical and safety data.
All data must be reviewed when selecting a product.
Pirtek reserve the right to change technical specifications without notice

STRAIGHT CONNECTORS

K SERIES
UN'O' MALE x JIC MALE EXT.

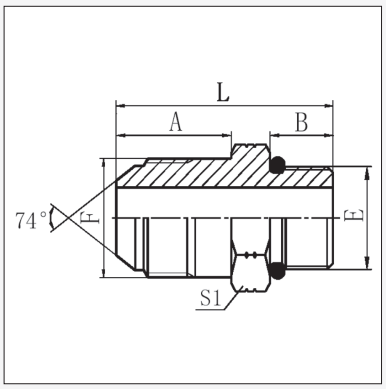

Product Code	Thread		Dimensions mm				
	E (UN'O')	F (JIC)	A	B	L	S1	
K-07-07 †	7/16" - 20	7/16" - 20	35	9.1	50.5	14	
K-08-08 †	1/2" - 20	1/2" - 20	37	9.1	52.5	17	
K-09-09	9/16" - 18	9/16" - 18	39	9.9	55	17	
K-12-12 †	3/4" - 16	3/4" - 16	48	11.1	67.5	22	
K-14-14 †	7/8" - 14	7/8" - 14	53	12.7	76	27	
K-17-17 †	1.1/16" - 12	1.1/16" - 12	63	15.1	89	32	
K-21-21 †	1.5/16" - 12	1.5/16" - 12	72	15.1	100	38	

† Non stocked, available on request

L SERIES
METRIC MALE x JIC MALE

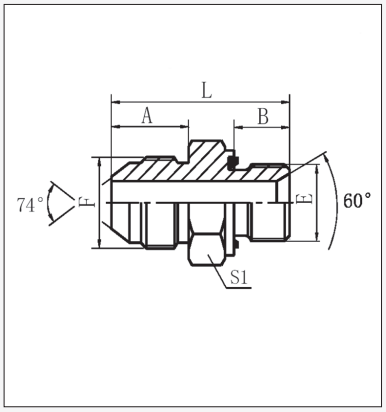

Product Code	Thread		Dimensions mm			
	E (METRIC)	F (JIC)	A	B	L	S1
L-08-07 *	M8 - 1	7/16" - 20	14	7	28	12
L-10-07	M10 - 1	7/16" - 20	14	8	29.5	17
L-10-09	M10 - 1	9/16"-18	14	8	29.5	14
L-12-07	M12 - 1.5	7/16" - 20	14	10	31	17
L-12-09	M12 - 1.5	9/16" - 18	14	12	33.5	17
L-14-07	M14X1.5	7/16"X20	14	12	33.4	19
L-14-09	M14 - 1.5	9/16" - 18	14	12	34	19
L-14-12	M14 - 1.5	3/4" - 16	16.7	12	38.5	22
L-16-07	M16 - 1.5	7/16"-20	14	12	36	14
L-16-09	M16 - 1.5	9/16" - 18	14	12	36	22
L-16-12	M16 - 1.5	3/4" - 16	16.7	12	38.5	22
L-16-14	M16 - 1.5	7/8"-14	19	12	41	24
L-18-09	M18 - 1.5	9/16" - 18	14.1	12	36.5	24
L-18-12	M18 - 1.5	3/4" - 16	16.7	12	39	24
L-18-14	M18 - 1.5	7/8" - 14	19.3	12	41.5	24
L-18-17	M18 - 1.5	1.1/16" - 12	21.9	12	46.5	30
L-20-09	M20 - 1.5	9/16" - 18	14.1	14	40.5	27
L-20-12	M20 - 1.5	3/4" - 16	16.7	14	43	27
L-20-14	M20 - 1.5	7/8" - 14	19.3	14	45.5	27
L-22-12	M22 - 1.5	3/4" - 16	16.7	14	43.5	27
L-22-14	M22 - 1.5	7/8" - 14	19.3	14	46	27
L-22-17	M22 - 1.5	1.1/16" - 12	21.9	14	48.5	30
L-24-17 *	M24 - 1.5	1.1/16"-12	22	14	48	30
L-26-17	M26 - 1.5	1.1/16" - 12	21.9	16	52	32
L-26-21	M26 - 1.5	1.5/16" - 12	23.1	16	53	36
L-27-17	M27 - 2	1.1/16" - 12	21.9	16	52	32
L-27-21	M27 -2	1.5/16"-12	21.9	16	52	36
L-33-17	M33 - 2	1.1/16" - 12	21.9	18	52	38
L-33-21	M33 - 2	1.5/16" - 12	23.1	18	57	41
L-33-26	M33 -2	1.5/8" - 12	24.3	18	58.2	46
L-42-26	M42 - 2	1.5/8" - 12	24.3	20	62	50
L-42-30	M42 - 2	1.7/8" - 12	27.5	20	64	50
L-48-26	M48 - 2	1.5/8" - 12	24.3	22	67.5	55
L-48-30	M48 - 2	1.7/8" - 12	27.5	22	67.5	55

* Requires bonded dowty Seal, QC Series

PIRTEK

This page is part of a complete catalogue containing technical and safety data.
All data must be reviewed when selecting a product.
Pirtek reserve the right to change technical specifications without notice

STRAIGHT CONNECTORS

M SERIES

NPTF MALE x JIC MALE

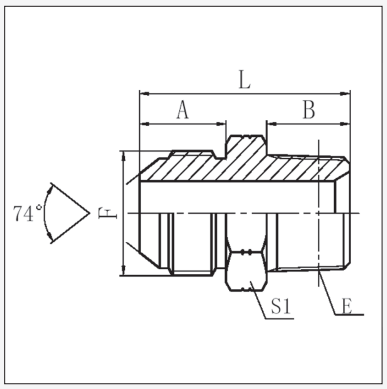

Product Code	Thread		Dimensions mm				
	E (NPTF)	F (JIC)	A	B	L	S1	
M-02-07	1/8" - 27	7/16" - 20	14	10	30.5	12	
M-02-08	1/8" - 27	1/2" - 20	14	10.5	30.5	14	
M-02-09	1/8" - 27	9/16" - 18	14.1	10.5	30.5	17	
M-04-07	1/4" - 18	7/16" - 20	14	15	35	17	
M-04-08	1/4" - 18	1/2" - 20	14	15	35	17	
M-04-09	1/4" - 18	9/16" - 18	14.1	15	34.5	17	
M-04-10 †	1/4" - 18	5/8" - 18 †					
M-04-12	1/4" - 18	3/4" - 16	16.7	15	39	22	
M-06-07	3/8" - 18	7/16" - 20	14	15	36	19	
M-06-08	3/8" - 18	1/2" - 20	14	15	35	19	
M-06-09	3/8" - 18	9/16" - 18	14.1	16	36	19	
M-06-10 †	3/8" - 18	5/8" - 18 †					
M-06-12	3/8" - 18	3/4" - 16	16.7	16	40	22	
M-06-14	3/8" - 18	7/8" - 14	19.3	16	43.5	24	
M-06-17	3/8" - 18	1.1/16" - 12	21.9	16	48	30	
M-08-07	1/2" - 14	7/16" - 20	14	19.5	40	22	
M-08-09	1/2" - 14	9/16" - 18	14.1	19.5	41.5	22	
M-08-10	1/2" - 14	5/8" - 18 †					
M-08-12	1/2" - 14	3/4" - 16	16.7	19.5	44	24	
M-08-14	1/2" - 14	7/8" - 14	19.3	19.5	47	24	
M-08-17	1/2" - 14	1.1/16" - 12	21.9	19.5	51	30	
M-12-09	3/4" - 14	9/16" - 18	15	19.5	44.5	30	
M-12-12	3/4" - 14	3/4" - 16	16.7	19.5	46.5	30	
M-12-14	3/4" - 14	7/8" - 14	19.3	19.5	49	30	
M-12-17	3/4" - 14	1.1/16" - 12	21.9	19.5	51.5	30	
M-12-19	3/4" - 14	1.3/16" - 12	22.6	19.5	53	32	
M-12-21	3/4" - 14	1.5/16" - 12	23.1	19.5	53.5	36	
M-16-17	1" - 11.5	1.1/16" - 12	21.9	25.5	58.5	36	
M-16-19	1" - 11.5	1.3/16" - 12					
M-16-21	1" - 11.5	1.5/16" - 12	23.1	25.5	58.5	36	
M-16-26	1" - 11.5	1.5/8" - 12	24.3	25.5	63	46	
M-20-21	1.1/4" - 11.5	1.5/16" - 12	23.1	26.5	62.5	46	
M-20-26	1.1/4" - 11.5	1.5/8" - 12	24.3	26.5	63.5	46	
M-20-30	1.1/4" - 11.5	1.7/8" - 12	27.5	26.5	69	50	
M-24-26	1.1/2" - 11.5	1.5/8" - 12	24.3	27.5	67	50	
M-24-30	1.1/2" - 11.5	1.7/8" - 12	27.5	27.5	70	50	
M-24-40	1.1/2" - 11.5	2.1/2" - 12	33.9	27.5	78.5	65	
M-32-30	2" - 11.5	1.7/8" - 12	27.5	27.5	78.5	65	
M-32-40	2" - 11.5	2.1/2" - 12	33.9	27.5	80	65	

† SAE Thread Form

PIRTEK

This page is part of a complete catalogue containing technical and safety data.
All data must be reviewed when selecting a product.
Pirtek reserve the right to change technical specifications without notice

STRAIGHT CONNECTORS

P SERIES
JIC MALE x JIC MALE

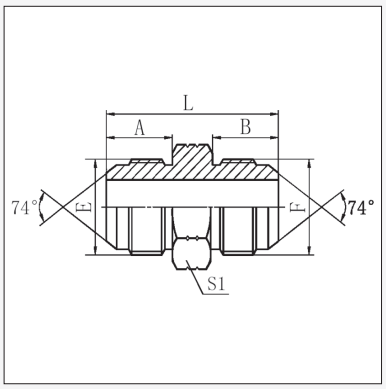

Product Code	Thread		Dimensions mm				
	E (JIC)	F (JIC)	A	B	L	S1	
P-07-07	7/16" - 20	7/16" - 20	14	14	34	12	
P-08-08	1/2" - 20	1/2" - 20	14	14	34	14	
P-09-07	9/16" - 18	7/16" - 20	14.1	14	34.1	17	
P-09-09	9/16" - 18	9/16" - 18	14.4	14.1	34.2	17	
P-10-10 †	5/8" - 18	5/8" - 18 †					
P-12-07	3/4" - 16	7/16" - 20	16.7	14	38.5	22	
P-12-09	3/4" - 16	9/16" - 18	16.7	14.1	38.5	22	
P-12-12	3/4" - 16	3/4" - 16	16.7	16.7	42	22	
P-14-09	7/8" - 14	9/16" - 18	19.3	14.1	41.5	24	
P-14-12	7/8" - 14	3/4" - 16	19.3	16.7	44	24	
P-14-14	7/8" - 14	7/8" - 18	19.3	19.3	46.5	24	
P-17-09	1.1/16" - 12	9/16" - 18	21.9	14.1	46	30	
P-17-12	1.1/16" - 12	3/4" - 16	21.9	16.7	48.5	30	
P-17-14	1.1/16" - 12	7/8" - 14	21.9	19.3	51	30	
P-17-17	1.1/16" - 12	1.1/16" - 12	21.9	21.9	54	30	
P-19-19	1.3/16" - 12	1.3/16" - 12	22.6	22.6	56	32	
P-21-14	1.5/16" - 12	7/8" - 14	23.1	19.3	53.5	36	
P-21-17	1.5/16" - 12	1.1/16" - 12	23.1	21.9	56	36	
P-21-19	1.5/16" - 12	1.3/16" - 12	23.1	22.6	56.5	36	
P-21-21	1.5/16" - 12	1.5/16" - 12	23.1	23.1	57	36	
P-26-21	1.5/8" - 12	1.5/16" - 12	24.3	23.1	60.5	46	
P-26-26	1.5/8" - 12	1.5/8" - 12	24.3	24.3	62	46	
P-30-30	1.7/8" - 12	1.7/8" - 12	27.5	27.5	70	50	
P-40-40	2.1/2" - 12	2.1/2" - 12	33.9	33.9	85	65	

† SAE Thread Form

R SERIES
JIC MALE x JIC MALE BULKHEAD

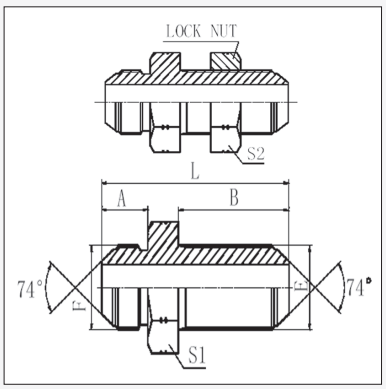

Product Code	Thread		Dimensions mm				
	E (JIC)	F (JIC)	A	B	L	S1	S2
R-07-07	7/16" - 20	7/16" - 20	14	32.5	52.5	17	17
R-08-08	1/2" - 20	1/2" - 20	14	32.5	52.5	19	19
R-09-09	9/16" - 18	9/16" - 18	14.1	32.5	54.5	22	22
R-10-10 †	5/8" - 18	5/8" - 18	15.7	36.0	60	24	24
R-12-12	3/4" - 16	3/4" - 16	16.7	36.5	61.5	24	24
R-14-14	7/8" - 14	7/8" - 14	19.3	40	69.5	30	30
R-17-17	1.1/16" - 12	1.1/16" - 12	21.9	44.5	78.5	36	36
R-21-21	1.5/16" - 12	1.5/16" - 12	23.1	44.5	79.8	41	41
R-26-26	1.5/8" - 12	1.5/8" - 12	24.3	45.7	84	50	50
R-30-30	1.7/8" - 12	1.7/8" - 12	27.5	46	89.5	55	55

† SAE Thread Form

STRAIGHT CONNECTORS

AH SERIES
BSPP MALE x BSPP MALE

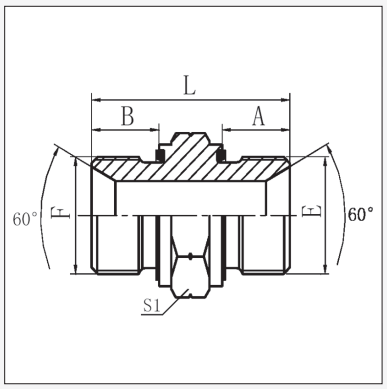

Product Code	Thread		Dimensions mm				
	E (BSPP)	F (BSPP)	A	B	L	S1	
AH-02-02	1/8" - 28	1/8" - 28	7.8	7.8	25.5	14	
AH-04-02	1/4" - 19	1/8" - 28	12	8	29.5	19	
AH-04-04	1/4" - 19	1/4" - 19	12	12	34	19	
AH-06-04	3/8" - 19	1/4" - 19	12	12	34.5	22	
AH-06-06	3/8" - 19	3/8" - 19	12	12	37	22	
AH-08-04	1/2" - 14	1/4" - 19	14	12	39	27	
AH-08-06	1/2" - 14	3/8" - 19	14	13.5	40.5	27	
AH-08-08	1/2" - 14	1/2" - 14	14	14	44	27	
AH-12-04	3/4"- 14	1/4" - 19	16	12	42	32	
AH-12-06	3/4"- 14	3/8" - 19	16	12	42.5	32	
AH-12-08	3/4" - 14	1/2" - 14	16	16	46	32	
AH-12-12	3/4" - 14	3/4" - 14	16	16	47	32	
AH-16-08	1" - 11	1/2" - 14	18	14	51	41	
AH-16-12	1" - 11	3/4" - 14	18	18.5	52.5	41	
AH-16-16	1" - 11	1" - 11	18	18	55	41	
AH-20-12	1.1/4" - 11	3/4" - 14	20	18	57	50	
AH-20-16	1.1/4" - 11	1" - 11	20.5	20	58.5	50	
AH-20-20	1.1/4" - 11	1.1/4" - 11	20	20	61	50	
AH-24-16	1.1/2" - 11	1" - 11	22	18	61	55	
AH-24-20	1.1/2" - 11	1.1/4" - 11	22	20.5	60.5	55	
AH-24-24	1.1/2" - 11	1.1/2" - 11	22	22	65	55	
AH-32-24	2" - 11	1.1/2" - 11	22	22	66	75	
AH-32-32*	2" - 11	2" - 11	22	22	66	70	

* Encapsulated seal one end only

AM SERIES
BSPP MALE x JIS (BSPP) MALE

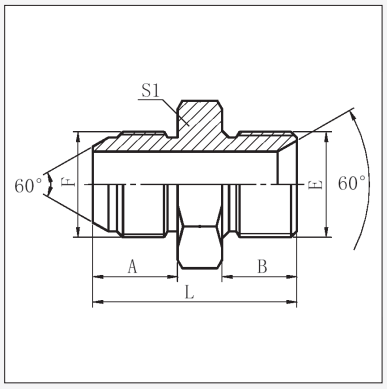

Product Code	Thread		Dimensions mm				
	E (BSPP)	F(JISBSPP)	A	B	L	S1	
AM-04-04	1/4" x 19	1/4" x 19	16	12	34	19	
AM-06-06	3/8" x 19	3/8" x 19	18	13.5	39.5	22	
AM-08-08	1/2" x 14	1/2" x 14	20	16	46	27	
AM-12-12	3/4" - 14	3/4" - 14	22	18	51.5	32	
AM-16-16	1" x 11	1" x 11	24	20.5	57.5	41	

PIRTEK

This page is part of a complete catalogue containing technical and safety data.
All data must be reviewed when selecting a product.
Pirtek reserve the right to change technical specifications without notice

AN / ANHD SERIES

NPTF MALE x NPTF MALE

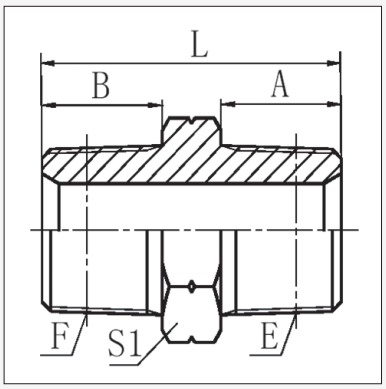

Product Code	Thread		Dimensions mm				
	E (NPTF)	F (NPTF)	A	B	L	S1	
AN-02-02	1/8" - 27	1/8" - 27	10.5	10.5	27	12	
AN-04-02	1/4" - 18	1/8" - 27	15	10.5	31	17	
AN-04-04	1/4" - 18	1/4" - 18	15	15	36	17	
AN-06-04	3/8" - 18	1/4" - 18	16	15	37	19	
AN-06-06	3/8" - 18	3/8" - 18	16	16	38	19	
AN-08-04	1/2" - 14	1/4" - 18	19.5	15	41.5	22	
AN-08-06	1/2" - 14	3/8" - 18	19.5	16	43.5	22	
AN-08-08	1/2" - 14	1/2" - 14	19.5	19.5	47	22	
AN-12-04	3/4" - 14	1/4" - 18	19.5	15	43.5	30	
AN-12-06	3/4" - 14	3/8" - 18	19.5	16	45.5	30	
AN-12-08	3/4" - 14	1/2" - 14	19.5	19.5	49	30	
AN-12-12	3/4" - 14	3/4" - 14	19.5	19.5	49	30	
AN-16-08	1" - 11.5	1/2" - 14	25.5	19.5	56	36	
AN-16-12	1" - 11.5	3/4" - 14	25.5	19.5	55	36	
AN-16-16	1" - 11.5	1" - 11.5	25.5	25.5	62	36	
AN-20-16	1.1/4" - 11.5	1" - 11.5	26.5	25.5	64	46	
AN-20-20	1.1/4" - 11.5	1.1/4" - 11.5	26.5	26.5	66	46	
AN-24-16	1.1/2" - 11.5	1" - 11.5					
AN-24-20	1.1/2" - 11.5	1.1/4" - 11.5	27.5	26.5	69	50	
AN-24-24	1.1/2" - 11.5	1.1/2" - 11.5	27.5	27.5	70	50	
AN-32-24	2" - 11.5	1.1/2" - 11.5	27.5	27.5	72	65	
AN-32-32	2" - 11.5	2" - 11.5	27.5	27.5	72	65	
HEAVY DUTY 10,000 PSI (700 BAR) HIGH PRESSURE SERIES							
ANHD-04-04	1/4" - 18	1/4" - 18	15	15	38	16	
ANHD-06-06	3/8" - 18	3/8" - 18	15	15	38	19	

KA SERIES

JIS (METRIC) MALE x BSPP MALE

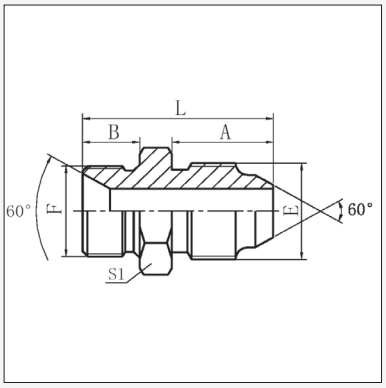

Product Code	Thread		Dimensions mm				
	E (METRIC)	F (BSPP)	A	B	L	S1	
KA-14-04	M14 - 1.5	1/4" - 19	15.5	12	33.5	19	
KA-18-06	M18 - 1.5	3/8" - 19	18	13.5	39.5	22	
KA-22-06	M22 - 1.5	3/8" - 19	20	13.5	41.5	24	
KA-22-08	M22 - 1.5	1/2" - 14	20	16	46	27	
KA-24-08	M24 - 1.5	1/2" - 14	22	16	48	27	
KA-24-12	M24 - 1.5	3/4" - 14	22	18.5	51.5	32	

PIRTEK

This page is part of a complete catalogue containing technical and safety data.
All data must be reviewed when selecting a product.
Pirtek reserve the right to change technical specifications without notice

STRAIGHT CONNECTORS

KF SERIES

JIS METRIC MALE x BSPT MALE

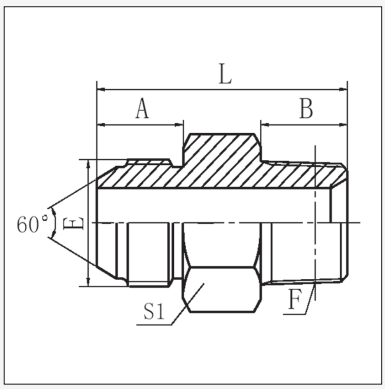

Product Code	Thread		Dimensions mm				
	E (METRIC)	F (BSPT)	A	B	L	S1	
KF-14-04	M14 - 1.5	1/4" - 19	17	14.5	37.5	17	
KF-14-06	M14 - 1.5	3/8" - 19	17	15	38	19	
KF-16-06	M16 - 1.5	3/8" - 19	18	15	38	19	
KF-18-06	M18 - 1.5	3/8" - 19	18	15	38	19	
KF-20-06	M20 - 1.5	3/8" - 19	20	15	43	22	
KF-22-06	M22 - 1.5	3/8" - 19	20	15	43	24	
KF-22-08	M22 - 1.5	1/2" - 14	20	20	48	24	
KF-24-08	M24 - 1.5	1/2" - 14	21.5	20	51.5	27	
KF-24-12	M24 - 1.5	3/4" - 14	21.5	20	51.5	30	
KF-30-12	M30 - 1.5	3/4" - 14	26	20	57	32	
KF-33-16	M33 - 1.5	1" - 11	30	25.5	66.5	36	

KP SERIES

JIS METRIC MALE x JIS METRIC MALE

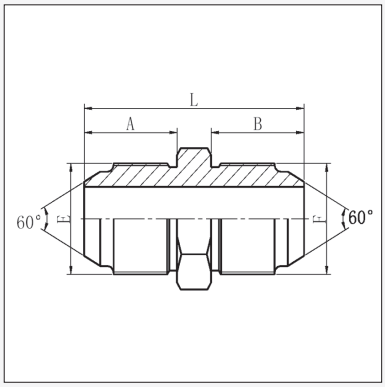

Product Code	Thread		Dimensions mm				
	E (METRIC)	F (METRIC)	A	B	L	S1	
KP-14-14	M14 - 1.5	M14 - 1.5	17	17	40	17	
KP-16-16	M16 - 1.5	M16 - 1.5	18	18	42	19	
KP-18-18	M18 - 1.5	M18 - 1.5	18	18	42	19	
KP-20-20	M20 - 1.5	M20 - 1.5	20	20	48	22	
KP-22-22	M22 - 1.5	M22 - 1.5	20	20	48	24	
KP-24-24	M24 - 1.5	M24 - 1.5	21.5	21.5	53	27	
KP-30-30	M30 - 1.5	M30 - 1.5	26	26	63	32	
KP-33-33	M33 - 1.5	M33 - 1.5	30	30	71	36	

PIRTEK

This page is part of a complete catalogue containing technical and safety data.
All data must be reviewed when selecting a product.
Pirtek reserve the right to change technical specifications without notice

STRAIGHT CONNECTORS

PS SERIES
SAE INVERTED FLARE x JIC MALE

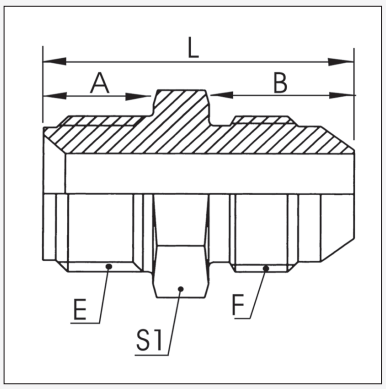

Product Code	Thread		Dimensions mm				
	E(SAEFlare)	F (JIC)	A	B	L	S1	
PS-06-07	3/8" - 24	7/16" - 20	9	14	30	12	
PS-07-07	7/16" - 24	7/16" - 20	9	14	30	12	
PS-08-08	1/2" - 20	1/2" - 20	10	14	31	14.3	
PS-08-09	1/2" - 20	9/16" - 18	10	14	31	17.5	
PS-08-10 †	1/2" - 20	5/8" - 18 †	10	16	32	17.5	
PS-10-09	5/8" - 18	9/16" - 18	10	14	31	17.5	
PS-10-10 †	5/8" - 18	5/8" - 18 †	10	16	33	17.5	
PS-10-12	5/8" - 18	3/4" - 16	10	17	35	22.2	
PS-11-12	11/16" - 18	3/4" - 16	13	17	37	22.2	
PS-12-12	3/4" - 18	3/4" - 16	13	17	37	22.2	

† SAE Thread Form

FF1201 SERIES
BSPP MALE x ORFS MALE

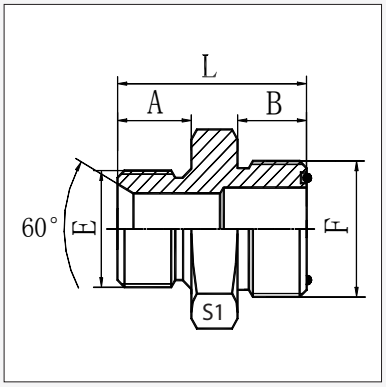

Product Code	Thread		Dimensions mm				
	E (BSPP)	F (ORFS)	A	B	L	S1	
FF1201-0204	1/8" - 19	9/16" - 18	8	26	26	17	
FF1201-0404	1/4" - 19	9/16" - 18	12	10	31	19	
FF1201-0406	1/4" - 19	11/16" - 16	12	11	32	19	
FF1201-0408	1/4" - 19	13/16" - 16	12	13	37	19	
FF1201-0604	3/8" - 19	9/16" - 18	12	10	31.5	22	
FF1201-0606	3/8" - 19	11/16" - 16	12	11	33.5	22	
FF1201-0608	3/8" - 19	13/16" - 16	12	13	34.5	22	
FF1201-0806	1/2" - 14	11/16" - 16	14	11	38.5	22	
FF1201-0808	1/2" - 14	13/16" - 16	14	13	40	27	
FF1201-0810	1/2" - 14	1" - 14	14	15.5	41	27	
FF1201-0812	1/2" - 14	1.3/16" - 12	14	17	48.5	27	
FF1201-1208	3/4" - 14	13/16" - 16	16	12	43	32	
FF1201-1210	3/4" - 14	1" - 14	16	15.5	44.5	32	
FF1201-1212	3/4" - 14	1.3/16" - 12	16	17	46	32	
FF1201-1612	1" - 11	1.3/16" - 12	17	16	47	41	
FF1201-1616	1" - 11	1.7/16" - 12	18	17.5	50	41	
FF1201-2016	1.1/4" - 11	1.7/16" - 12	20	18	55	50	
FF1201-2020	1.1/4" - 11	1.11/16" - 12	20	17.5	54	50	
FF1201-2424	1.1/2" - 11	2" - 12	22	17.5	57.5	55	

STRAIGHT CONNECTORS

FF1202 SERIES
ORFS MALE x NPTF MALE

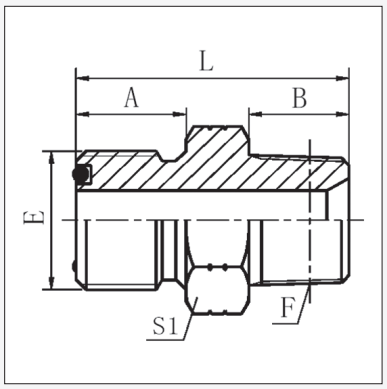

Product Code	Thread		Dimensions mm				
	E (ORFS)	F (NPT)	A	B	L	S1	
FF1202-0402	9/16" - 18	1/8" - 27	9.8	10.5	26.5	17	
FF1202-0404	9/16" - 18	1/4" - 18	9.8	15	30.5	17	
FF1202-0406	9/16" - 18	3/8" - 18	9.8	16	30.5	19	
FF1202-0602	11/16" - 16	1/8" - 27					
FF1202-0604	11/16" - 16	1/4" - 18	11.2	15	32	19	
FF1202-0606	11/16" - 16	3/8" - 18	11.2	16	33.5	19	
FF1202-0608	11/16" - 16	1/2" - 14	11.2	19.5	39	24	
FF1202-0804	13/16" - 16	1/4" - 18	12.8	15	36	22	
FF1202-0806	13/16" - 16	3/8" - 18	12.8	16	36.5	22	
FF1202-0808	13/16" - 16	1/2" - 14	12.8	19.5	40	24	
FF1202-0812	13/16" - 16	3/4" - 14	12.8	19.5	40	24	
FF1202-1008	1" - 14	1/2" - 14	15.5	19.5	45	27	
FF1202-1012	1" - 14	3/4" - 14	15.5	19.5	45	30	
FF1202-1208	1.3/16" - 12	1/2" - 14	17	19.5	49	32	
FF1202-1212	1.3/16" - 12	3/4" - 14	17	19.5	46.5	32	
FF1202-1216	1.3/16" - 12	1" - 11.5	17	25.5	53.5	38	
FF1202-1612	1.7/16" - 12	3/4" - 14	17.5	19.5	48	38	
FF1202-1616	1.7/16" - 12	1" - 11.5	17.5	25.5	53.5	36	
FF1202-1620	1.7/16" - 12	1.1/4" - 11.5	17.5	26.5	56.5	46	
FF1202-2020	1.11/16" - 12	1.1/4" - 11.5	17.5	27.5	59.5	50	
FF1202-2424	2" - 12	1.1/2" - 11.5	17.5	27.5	59.5	55	

FF1204 SERIES
ORFS MALE x ORFS MALE

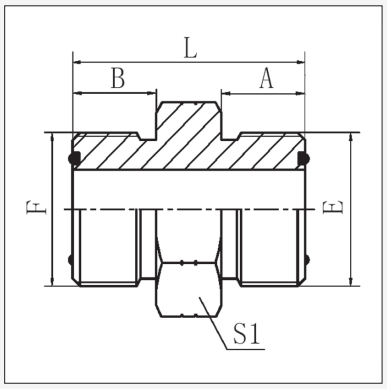

Product Code	Thread		Dimensions mm				
	E (ORFS)	F (ORFS)	A	B	L	S1	
FF1204-0404	9/16" - 18	9/16" - 18	9.8	9.8	27.5	17	
FF1204-0604	11/16" - 16	9/16" - 18	11.2	9.8	29.7	19	
FF1204-0606	11/16" - 16	11/16" - 16	11.2	11.2	31.1	19	
FF1204-0806	13/16" - 16	11/16" - 16	11.2	12.8	33.8	22	
FF1204-0808	13/16" - 16	13/16" - 16	12.8	12.8	35.4	22	
FF1204-1008	1" - 14	13/16" - 16	15.5	12.8	40	27	
FF1204-1010	1" - 14	1" - 14	15.5	15.5	42.5	27	
FF1204-1210	1.3/16" - 12	1" - 14	17	15.5	45.5	32	
FF1204-1212	1.3/16" - 12	1.3/16" - 12	17	17	47.1	32	
FF1204-1612	1.7/16" - 12	1.3/16" - 12	17.5	17	45.5	38	
FF1204-1616	1.7/16" - 12	1.7/16" - 12	17.5	17.5	49.3	38	
FF1204-2020	1.11/16" - 12	1.11/16" - 12	17.5	17.5	51.3	46	
FF1204-2424	2" - 12	2" - 12	17.5	17.5	53	55	

This page is part of a complete catalogue containing technical and safety data.
All data must be reviewed when selecting a product.
Pirtek reserve the right to change technical specifications without notice

FF1231 SERIES

ORFS MALE x UN'O' MALE

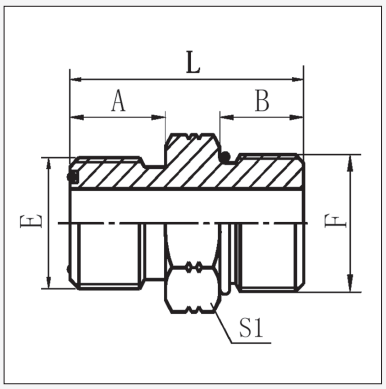

Product Code	Thread		Dimensions mm				
	E (ORFS)	F (UN'O')	A	B	L	S1	
FF1231-0404	9/16" - 18	7/16" - 20	9.8	11	28.7	17	
FF1231-0405	9/16" - 18	1/2" - 20	9.8	11	28.7	17	
FF1231-0406	9/16" - 18	9/16" - 18	9.8	12	29.5	17	
FF1231-0408	9/16" - 18	3/4" - 16	9.8	14	33.5	22	
FF1231-0604	11/16" - 16	7/16" - 20	11.2	11	31	19	
FF1231-0605	11/16" - 16	1/2" - 20	11.2	11	30.9	19	
FF1231-0606	11/16" - 16	9/16" - 18	11.2	12	31.9	19	
FF1231-0608	11/16" - 16	3/4" - 16	11.2	14	35	22	
FF1231-0610	11/16" - 16	7/8" - 14	11.2	16	38.5	27	
FF1231-0806	13/16" - 16	9/16" - 18	12.8	12	34.5	22	
FF1231-0808	13/16" - 16	3/4" - 16	12.8	14	36.6	22	
FF1231-0810	13/16" - 16	7/8" - 14	12.8	16	40.5	27	
FF1231-0812	13/16" - 16	1.1/16" - 12	12.8	18.5	44.5	32	
FF1231-0816	13/16" - 16	1.5/16" - 12	12.8	18.5	44.5	38	
FF1231-1008	1" - 14	3/4" - 16	15.5	14	41	27	
FF1231-1010	1" - 14	7/8" - 14	15.5	16	43.1	27	
FF1231-1012	1" - 14	1.1/16" - 12	15.5	18.5	47	32	
FF1231-1208	1.3/16" - 12	3/4" - 16	17	14	44	32	
FF1231-1210	1.3/16" - 12	7/8" - 14	17	16	46	32	
FF1231-1212	1.3/16" - 12	1.1/16" - 12	17	18.5	48.6	32	
FF1231-1214	1.3/16" - 12	1.3/16" - 12					
FF1231-1216	1.3/16" - 12	1.5/16" - 12	17	18.5	49.8	38	
FF1231-1612	1.7/16" - 12	1.1/16" - 12	17.5	18.5	50	38	
FF1231-1616	1.7/16" - 12	1.5/16" - 12	17.5	18.5	50.3	38	
FF1231-1620	1.7/16" - 12	1.5/8" - 12	17.5	18.5	52	50	
FF1231-2016	1.11/16" - 12	1.5/16" - 12	17.5	18.5	52.3	50	
FF1231-2020	1.11/16" - 12	1.5/8" - 12	17.5	18.5	52.3	50	
FF1231-2024	1.11/16" - 12	1.7/8" - 12	17.5	18.5	52	55	
FF1231-2420	2" - 12	1.5/8" - 12	17.5	18.5	54.1	55	
FF1231-2424	2" - 12	1.7/8" -12	17.5	18.5	54.1	55	

FF1260LN SERIES

ORFS MALE x ORFS MALE BULKHEAD

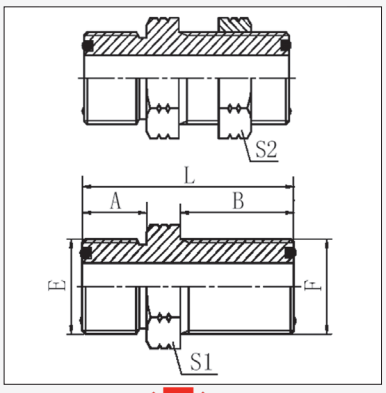

Product Code	Thread		Dimensions mm				
	E (ORFS)	F (ORFS)	A	B	L	S1	S2
FF1260LN-0404	9/16" - 18	9/16" - 18	9.8	31.5	48,2	22	22
FF1260LN-0606	11/16" - 16	11/16" - 16	11.2	34	53.2	27	27
FF1260LN-0808	13/16" - 16	13/16" - 16	12.8	36.5	58.3	30	30
FF1260LN-1010	1" - 14	1" - 14	15.5	40.6	66.6	36	36
FF1260LN-1212	1.3/16" - 12	1.3/16" - 12	17	41.7	69.2	38	38
FF1260LN-1616	1.7/16" - 12	1.7/16" - 12	17.5	42.2	70.2	46	46
FF1260LN-2020	1.11/16" - 12	1.11/16" - 12	17.5	42.2	70.2	50	50
FF1260LN-2424	2" - 12	2" - 12	17.5	42.2	70.2	60	60

This page is part of a complete catalogue containing technical and safety data.
All data must be reviewed when selecting a product.
Pirtek reserve the right to change technical specifications without notice

SECTION 2
TEES / CROSSES

			PAGE
CBA	JIC x JIC x JIC	M / M / M	**D 19**
CBB / CBBI	JIC x JIC x JIC	M / M / F_{SW}	**D 19**
CBH	JIC x JIC x JIC BULKHEAD	M / M / M	**D 20**
CBJ	JIC x JIC x BSPT	M / M / M	**D 20**
CBJP	JIC MALE x JIC MALE x BSPT MALE	M / M / M	**D 20**
CBJN	JIC x JIC x NPTF	M / M / M	**D 21**
CBM	JIC x JIC x UN`O´	M / M / M	**D 21**
CMA / CMAI	JIC x JIC x JIC	M / F_{SW} / M	**D 22**
CXA	JIC x JIC BULKHEAD X JIC	M / M / M	**D 22**
CTA	JIC x BSPT x JIC	M / M / M	**D 23**
CTAN	JIC x NPT x JIC	M / M / M	**D 23**
CTP	JIC x BSPP x JIC	M / M / M	**D 23**
CYA	JIC x UN`O´ x JIC	M / M / M	**D 24**
EPD / EPDP	BSP x BSPP x BSP	M / F / M	**D 24**
EPF	BSPT x BSPT x BSPT	F / F / F	**D 24**
EPFFM	BSPP x BSPP x BSPT	F_{sw}/ F_{sw}/ M	**D 25**
EPFLF	BSPT x BSPT x BSPT	F / M / F	**D 25**
EPJ	BSPT x BSPT x BSPT	M / M / M	**D 25**
EPK / EPKHD	NPTF x NPTF x NPTF	F / F / F	**D 26**
EPKKL	NPTF / NPTF / NPTF	F / F / M	**D 26**
EPKLK	NPTF x NPTF x NPTF	F / M / F	**D 26**
EPP	BSPT x BSPP x BSPT	M / M / M	**D 27**
FF1220	ORFS x ORFS x ORFS	M / M / M	**D 27**
FF1221	ORFS x ORFS x NPTF	M / M / M	**D 28**
FF1265	ORFS x ORFS x UN`O´	M / M / M	**D 28**
FF1266	ORFS x UN`O´ x ORFS	M / M / M	**D 28**
FF1248	ORFS x ORFS x ORFS	M / F_{SW} / M	**D 29**
FF1227	ORFS x ORFS x ORFS	M / M / F_{SW}	**D 29**
KMA	JIS MET x JIS MET x JIS MET	M / F_{SW} / M	**D 29**
KYA	JIS MET x JIS MET `O´ x JIS MET	M / M / M	**D 30**
MFBB/ MFFB/ MFJB/MFJU	TEST POINT ADAPTORS	M/F/M	**D 30**
FF1229	ORFS Cross	M/M/M/M	**D30**

PIRTEK

This page is part of a complete catalogue containing technical and safety data.
All data must be reviewed when selecting a product.
Pirtek reserve the right to change technical specifications without notice

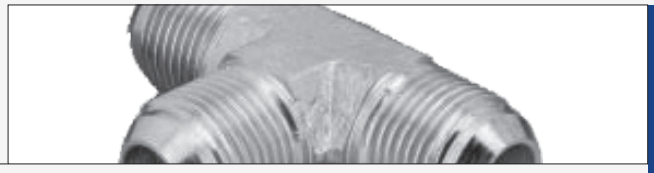

CBA SERIES

JIC MALE x JIC MALE x JIC MALE

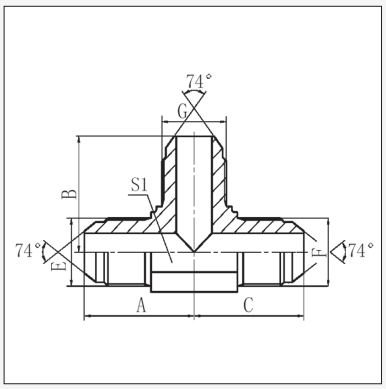

Product Code	Thread			Dimensions mm					
	E (JIC)	F (JIC)	G (JIC)	A	B	C	S1		
CBA-07-07-07	7/16" - 20	7/16" - 20	7/16" - 20	24.5	24.5	24.5	11		
CBA-08-08-08	1/2" - 20	1/2" - 20	1/2" - 20	26	26	26	14		
CBA-09-09-09	9/16" - 18	9/16" - 18	9/16" - 18	26.9	26.9	26.9	14		
CBA-12-12-12	3/4" - 16	3/4" - 16	3/4" - 16	32	32	32	19		
CBA-12-12-14	3/4" - 16	3/4" - 16	7/8" - 14	34.8	37.8	34.8	22		
CBA-12-12-17	3/4" - 16	3/4" - 16	1.1/16" - 12	38	38	44.2	27		
CBA-14-14-14	7/8" - 14	7/8" - 14	7/8" - 14	37.8	37.8	37.8	22		
CBA-17-17-17	1.1/16" - 12	1.1/16" - 12	1.1/16" - 12	44.2	44.2	44.2	27		
CBA-17-17-21	1.1/16" - 12	1.1/16" - 12	1.5/16" - 12	46	46.5	46	33		
CBA-21-17-17	1.5/16" - 12	1.1/16" - 12	1.1/16" - 12	46	46	46	33		
CBA-21-21-21	1.5/16" - 12	1.5/16" - 12	1.5/16" - 12	49	49	49	33		
CBA-26-26-26	1.5/8" - 12	1.5/8" - 12	1.5/8" - 12	56.5	56.5	56.5	41		
CBA-30-30-30	1.7/8" - 12	1.7/8" - 12	1.7/8" - 12	63	63	63	48		

CBB SERIES

JIC MALE x JIC MALE x JIC FEMALE

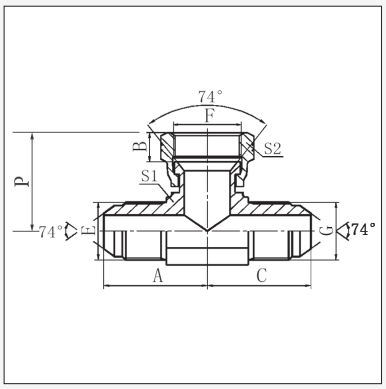

Product Code	Thread			Dimensions mm					
	E (JIC)	F (JIC)	G (JIC)	A	B	C	S1	S2	P
CBB-07-07-07[a]	7/16" - 20	7/16" - 20	7/16" - 20	22.5	9	22.5	11	15	25.5
CBB-08-08-08	1/2" - 20	1/2" - 20	1/2" - 20	24	9.5	24	14	17	27
CBB-09-09-09[a]	9/16" - 18	9/16" - 18	9/16" - 18	27	10.5	27	14	19	32
CBB-10-10-10†	5/8" x 18	5/8" x 18	5/8" x 18	30	11.3	30	16	22	
CBB-12-12-12[a]	3/4" - 16	3/4" - 16	3/4" - 16	31.5	11	31.5	19	24	35
CBB-14-14-14	7/8" - 14	7/8" - 14	7/8" - 14	36.5	14	36.5	22	27	41
CBB-17-17-17	1.1/16" - 12	1.1/16" - 12	1.1/16" - 12	42	15	42	27	32	44.5
CBB-21-21-21[a]	1.5/16" - 12	1.5/16" - 12	1.5/16" - 12	46	16	46	33	41	51
CBB-26-26-26[a]	1.5/8" - 12	1.5/8" - 12	1.5/8" - 12	52	17	52	41	50	59
CBB-30-30-30	1.7/8" - 12	1.7/8" - 12	1.7/8" - 12	59	20	59	48	55	66

† SAE Thread Form

[a] Also available with Imperial dimensioned hex nut. ***Product Code CBBI***

TEES

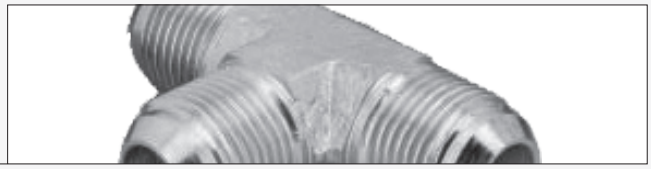

CBH SERIES

JIC MALE x JIC MALE x JIC MALE BULKHEAD

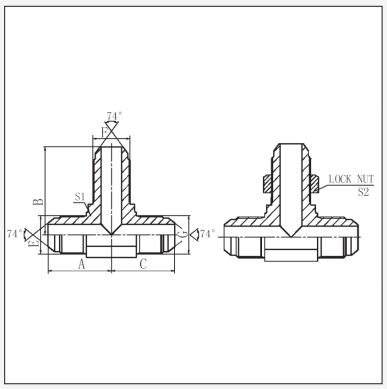

Product Code	Thread			Dimensions mm					
	E (JIC)	F (JIC)	G (JIC)	A	B	C	S1	S2	
CBH-07-07-07	7/16" - 20	7/16" - 20	7/16" - 20	24.5	40.4	24.5	11	17	
CBH-09-09-09	9/16" - 18	9/16" - 18	9/16" - 18	26.9	46	26.9	14	22	
CBH-12-12-12	3/4" - 16	3/4" - 16	3/4" - 16	32	53.5	32	19	24	
CBH-14-14-14	7/8" - 14	7/8" - 14	7/8" - 14	37.8	60.7	37.8	22	30	
CBH-17-17-17	1.1/16" - 12	1.1/16" - 12	1.1/16" - 12	44.2	67.8	44.2	27	36	
CBH-21-21-21	1.5/16" - 12	1.5/16" - 12	1.5/16" - 12	49	71	49	33	41	

CBJ SERIES

JIC MALE x JIC MALE x BSPT MALE

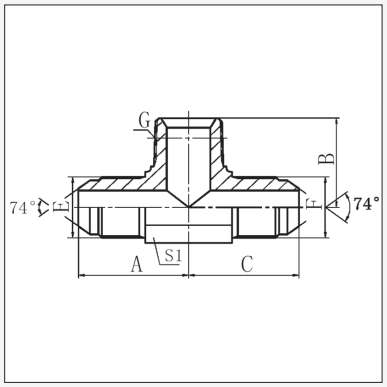

Product Code	Thread			Dimensions mm				
	E (JIC)	F (JIC)	G (BSPT)	A	B	C	S1	
CBJ-07-07-02	7/16" - 20	7/16" - 20	1/8" - 28	24.5	21	24.5	11	
CBJ-07-07-04	7/16" - 20	7/16" - 20	1/4" - 19	26.5	25.5	26.5	14	
CBJ-09-09-04	9/16" - 18	9/16" - 18	1/4" - 19	26.9	25.5	26.9	14	
CBJ-09-09-06	9/16" - 18	9/16" - 18	3/8" - 19	28.5	28.5	28.5	16	
CBJ-12-12-06	3/4" - 16	3/4" - 16	3/8" - 19	32	30.5	32	19	
CBJ-12-12-08	3/4" - 16	3/4" - 16	1/2" - 14	34.8	36	34.8	22	
CBJ-14-14-08	7/8" - 14	7/8" - 14	1/2" - 14	37.8	36	37.8	22	
CBJ-17-17-12	1.1/16" - 12	1.1/16" - 12	3/4" - 14	44.2	43.5	44.2	27	
CBJ-21-21-16	1.5/16" - 12	1.5/16" - 12	1" - 11	49	50	49	33	
CBJ-26-26-20	1.5/8" - 12	1.5/8" - 12	1.1/4" - 11	55.5	56.5	55.5	41	

CBJP SERIES

JIC MALE X JIC MALE X BSPP MALE

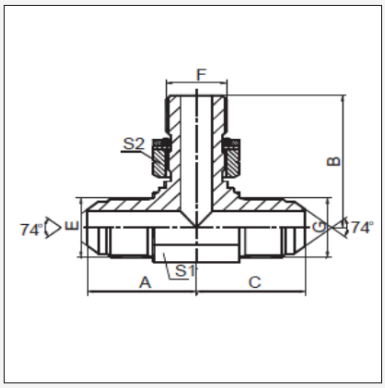

Product Code	Thread			Dimensions (mm)				
	E (JIC)	G (JIC)	F (BSPP)	A	B	C	S1	S2
CBJP-07-07-04	7/16"-20	7/16"-20	1/4"-19	27	27	31	14	19
CBJP-09-09-04	9/16"-18	9/16"-18	1/4"-19	37	31	27	14	19
CBJP-12-12-08	3/4"-16	3/4"-16	1/2"-14	35	35	43	22	27

PIRTEK

This page is part of a complete catalogue containing technical and safety data.
All data must be reviewed when selecting a product.
Pirtek reserve the right to change technical specifications without notice

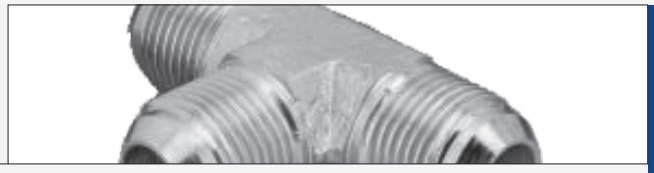

CBJN SERIES

JIC MALE x JIC MALE x NPT MALE

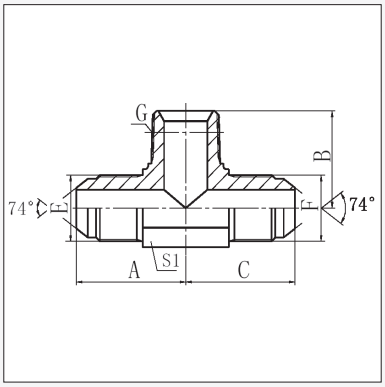

Product Code	Thread			Dimensions mm				
	E (JIC)	F (JIC)	G (NPT)	A	B	C	S1	
CBJN-07-07-02	7/16" - 20	7/16" - 20	1/8" - 27	24.5	21	24.5	11	
CBJN-07-07-04	7/16" - 20	7/16" - 20	1/4" - 18	26.6	25.5	26.6	14	
CBJN-09-09-04	9/16" - 18	9/16" - 18	1/4" - 18	26.9	25.5	26.9	14	
CBJN-09-09-06	9/16" - 18	9/16" - 18	3/8" - 18	30	31	30	19	
CBJN-12-12-06	3/4" - 16	3/4" - 16	3/8" - 18	32	31	32	19	
CBJN-12-12-08	3/4" - 16	3/4" - 16	1/2" - 14	34.8	37.3	34.8	22	
CBJN-14-14-08	7/8" - 14	7/8" - 14	1/2" - 14	37.8	36.7	37.8	22	
CBJN-17-17-12	1.1/16" - 12	1.1/16" - 12	3/4" - 14	44.2	44	44.2	27	
CBJN-21-21-16	1.5/16" - 12	1.5/16" - 12	1" - 11.5	49	50	49	33	

CBM SERIES

JIC MALE x JIC MALE x UN'O' MALE

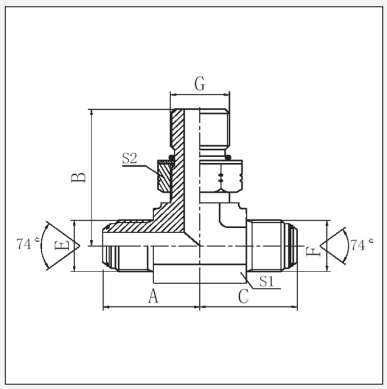

Product Code	Thread			Dimensions mm				
	E (JIC)	F (JIC)	G (UN'O')	A	B	C	S1	S2
CBM-07-07-07	7/16" - 20	7/16" - 20	7/16" - 20	24.5	27.2	24.5	11	17
CBM-09-09-09	9/16" - 18	9/16" - 18	9/16" - 18	26.9	31.8	26.9	14	19
CBM-12-12-09	3/4" - 16	3/4" - 16	9/16" - 18					
CBM-12-12-12	3/4" - 16	3/4" - 16	3/4" - 16	33	36.8	33	19	24
CBM-12-12-14	3/4" - 16	3/4" - 16	7/8" - 14	34.5	43	34.5	22	26
CBM-14-14-14	7/8" - 14	7/8" - 14	7/8" - 14	37.8	44	37.8	22	27
CBM-17-17-17	1.1/16" - 12	1.1/16" - 12	1.1/16" - 12	44.2	51	44.2	27	32
CBM-21-21-17	1.5/16" - 12	1.5/16" - 12	1.1/16" - 12					
CBM-21-21-21	1.5/16" - 12	1.5/16" - 12	1.5/16" - 12	48.8	54.5	48.8	33	41
CBM-26-26-26	1.5/8" - 12	1.5/8" - 12	1.5/8" - 12	55.3	59	55.3	41	50
CBM-30-30-30	1.7/8" - 12	1.7/8" - 12	1.7/8" - 12	62.5	63	62.5	48	55

PIRTEK

This page is part of a complete catalogue containing technical and safety data.
All data must be reviewed when selecting a product.
Pirtek reserve the right to change technical specifications without notice

TEES

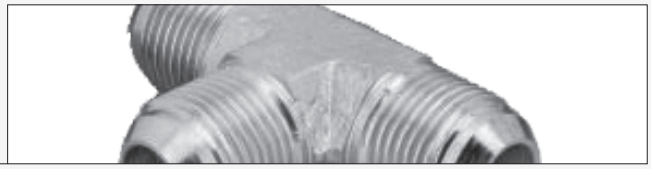

CMA SERIES

JIC MALE x JIC FEMALE x JIC MALE

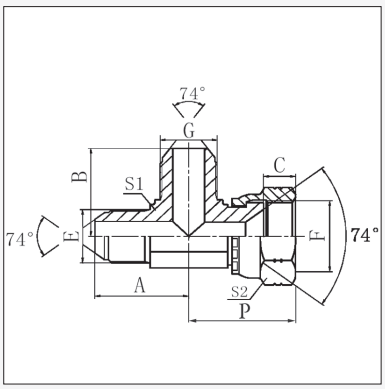

Product Code	Thread			Dimensions mm					
	E (JIC)	F (JIC)	G (JIC)	A	B	C	S1	S2	P
CMA-07-07-07 [a]	7/16" - 20	7/16" - 20	7/16" - 20	22.5	22.5	9	11	15	25.5
CMA-08-08-08	1/2" - 20	1/2" - 20	1/2" - 20	24	24	9.5	14	17	27
CMA-09-09-09 [a]	9/16" - 18	9/16" - 18	9/16" - 18	27	27	10.5	14	19	32
CMA-10-10-10 †	5/8" - 18	5/8" - 18	5/8" - 18	30	30	11.3	16	22	
CMA-12-12-09	3/4" - 16	3/4" - 16	9/16" - 18						
CMA-12-12-12 [a]	3/4" - 16	3/4" - 16	3/4" - 16	31.5	31.5	9.5	19	24	35
CMA-14-14-14	7/8" - 14	7/8" - 14	7/8" - 14	36.5	36.5	13	22	27	41
CMA-17-17-17	1.1/16" - 12	1.1/16" - 12	1.1/16" - 12	42	42	15	27	32	44.5
CMA-21-17-21	1.5/16" - 12	1.1/16" - 12	1.5/16" - 12						
CMA-21-21-17	1.5/16" - 12	1.5/16" - 12	1.1/16" - 12						
CMA-21-21-21 [a]	1.5/16" - 12	1.5/16" - 12	1.5/16" - 12	46	46	16	33	41	51
CMA-26-26-26	1.5/8" - 12	1.5/8" - 12	1.5/8" - 12	52	52	17	41	50	59
CMA-30-30-30	1.7/8" - 12	1.7/8" - 12	1.7/8" - 12	59	59	20	48	55	66

† SAE Thread Form

[a] Also available with Imperial dimensioned hex nut. ***Product Code CMAI***

CXA SERIES

JIC MALE x JIC MALE BULKHEAD x JIC MALE

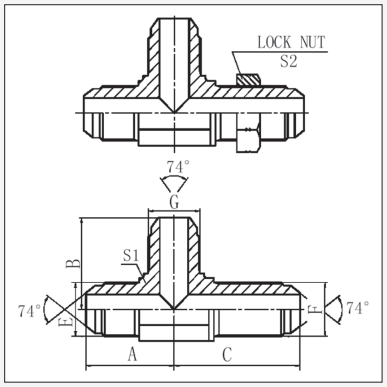

Product Code	Thread			Dimensions mm					
	E (JIC)	F (JIC)	G (JIC)	A	B	C	S1	S2	
CXA-07-07-07	7/16" - 20	7/16" - 20	7/16" - 20	24.5	24.5	40.4	11	17	
CXA-09-09-09	9/16" - 18	9/16" - 18	9/16" - 18	26.9	26.9	46	14	22	
CXA-12-12-12	3/4" - 16	3/4" - 16	3/4" - 16	32	32	53.5	19	24	
CXA-14-14-14	7/8" - 14	7/8" - 14	7/8" - 14	37.8	37.8	60.7	22	30	
CXA-17-17-17	1.1/16" - 12	1.1/16" - 12	1.1/16" - 12	44.2	44.2	67.8	27	36	
CXA-21-21-21	1.5/16" - 12	1.5/16" - 12	1.5/16" - 12	49	49	71	33	41	

CTA SERIES

JIC MALE x BSPT MALE x JIC MALE

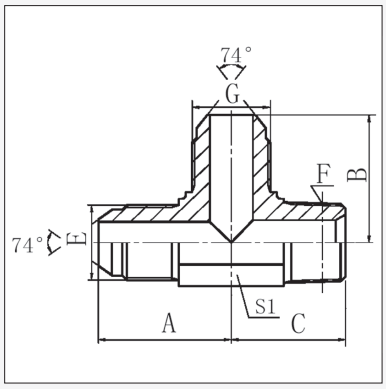

Product Code	Thread			Dimensions mm				
	E (JIC)	F (BSPT)	G (JIC)	A	B	C	S1	
CTA-07-02-07	7/16" - 20	1/8" - 28	7/16" - 20	24.5	24.5	21	11	
CTA-07-04-07	7/16" - 20	1/4" - 19	7/16" - 20	26.6	26.6	25.5	14	
CTA-09-04-09	9/16" - 18	1/4" - 19	9/16" - 18	26.9	26.9	25.5	14	
CTA-09-06-09	9/16" - 18	3/8" - 19	9/16" - 18	28.5	28.5	28.5	16	
CTA-12-06-12	3/4" - 16	3/8" - 19	3/4" - 16	32	32	30.5	19	
CTA-12-08-12	3/4" - 16	1/2" - 14	3/4" - 16	34.8	34.8	36	22	
CTA-14-08-14	7/8" - 14	1/2" - 14	7/8" - 14	37.8	37.8	36	22	
CTA-17-12-17	1.1/16" - 12	3/4" - 14	1.1/16" - 12	44.2	44.2	43.5	27	
CTA-21-16-21	1.5/16" - 12	1" - 11	1.5/16" - 12	49	49	50	33	
CTA-26-20-26	1.5/8" - 12	1.1/4" - 11	1.5/8" - 12	55.5	55.5	56.5	41	

This page is part of a complete catalogue containing technical and safety data.
All data must be reviewed when selecting a product.
Pirtek reserve the right to change technical specifications without notice

CTAN SERIES

JIC MALE x NPT MALE x JIC MALE

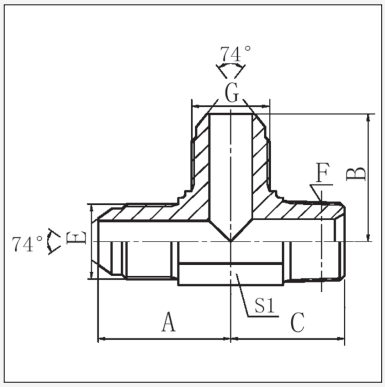

Product Code	Thread			Dimensions mm				
	E (JIC)	F (NPT)	G (JIC)	A	B	C	S1	
CTAN-07-02-07	7/16" - 20	1/8" - 27	7/16" - 20	24.5	24.5	21	11	
CTAN-09-04-09	9/16" - 18	1/4" - 18	9/16" - 18	26.9	26.9	25.5	14	
CTAN-12-06-12	3/4" - 16	3/8" - 18	3/4" - 16	32	32	31	19	
CTAN-12-08-12	3/4" - 16	1/2" - 14	3/4" - 16	34.8	34.8	36.7	22	
CTAN-17-12-17	1.1/16" - 12	3/4" - 14	1.1/16" - 12	44.2	44.2	44	27	
CTAN-21-16-21	1.5/16" - 12	1" - 11.5	1.5/16" - 12	49	49	50	33	

CTP SERIES

JIC MALE x BSPP MALE x JIC MALE

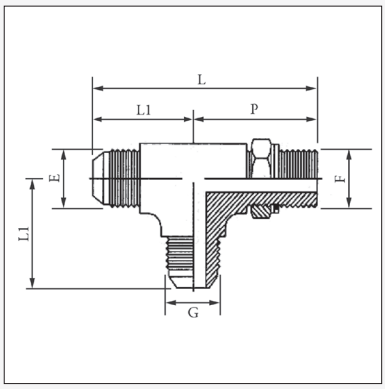

Product Code	Thread			Dimensions mm		
	E (JIC)	F (BSPP)	G (JIC)	L	L1	P
CTP-07-04-07	7/16" - 20	1/4" - 19	7/16" - 20	54	27	31.5
CTP-09-04-09	9/16" - 18	1/4"-19	9/16" - 18	58	27	31
CTP-09-06-09	9/16" - 18	3/8" - 19	9/16" - 18	57	28.5	36.5
CTP-12-08-12	3/4" - 16	1/2" - 14	3/4" - 16	68	34	43
CTP-14-08-14	7/8" - 14	1/2" - 14	7/8" - 14	81.8	37.8	44
CTP-17-12-17	1.1/16" - 12	3/4" - 14	1.1/16" - 12	84	42	49
CTP-21-16-21	1.5/16" - 12	1" - 11½	1.5/16" - 12	92	46	52

CYA SERIES

JIC MALE x UN'O' MALE x JIC MALE

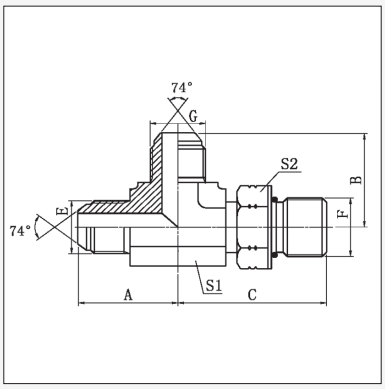

Product Code	Thread			Dimensions mm				
	E (JIC)	F (UN'O')	G (JIC)	A	B	C	S1	S2
CYA-07-07-07	7/16" - 20	7/16" - 20	7/16" - 20	24.5	24.5	27.2	11	17
CYA-07-09-07	7/16" - 20	9/16" - 18	7/16" - 20	26.6	26.6	31.8	14	19
CYA-08-08-08	1/2" - 20	1/2" - 20	1/2" - 20	26.6	26.6	29	14	17
CYA-09-09-09	9/16" - 18	9/16" - 18	9/16" - 18	26.9	26.9	31.8	14	19
CYA-12-12-12	3/4" - 16	3/4" - 16	3/4" - 16	33	33	36.8	19	24
CYA-14-14-14	7/8" - 14	7/8" - 14	7/8" - 14	37.8	37.8	44	22	27
CYA-17-17-17	1.1/16" - 12	1.1/16" - 12	1.1/16" - 12	44.2	44.2	51	27	32
CYA-21-21-21	1.5/16" - 12	1.5/16" - 12	1.5/16" - 12	48.8	48.8	54.5	33	41
CYA-26-26-26	1.5/8" - 12	1.5/8" - 12	1.5/8" - 12	55.3	55.3	59	41	50
CYA-30-30-30	1.7/8" - 12	1.7/8" - 12	1.7/8" - 12	62.5	62.5	63	48	55

TEES

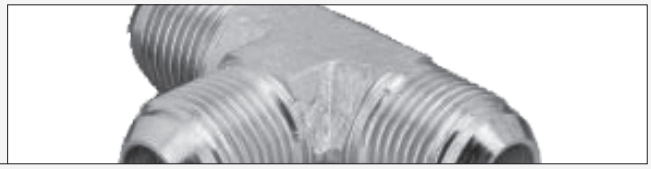

EPD / EPDP SERIES

BSP MALE x BSPP FEMALE x BSP MALE

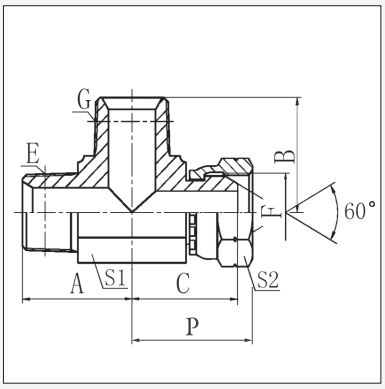

Product Code	Thread			Dimensions mm					
	E (BSPT)	F (BSPP)	G (BSPT)	A	B	C	S1	S2	P
EPD-02-02-02	1/8" - 28	1/8" - 28	1/8" - 28	22.5	22.5				32
EPD-04-04-04	1/4" - 19	1/4" - 19	1/4" - 19	27	27	28.5	14	14	34
EPDP-04-04-04†	1/4" - 19	1/4" - 19	1/4" - 19	27	27	28.5	14	14	34
EPD-06-06-06	3/8" - 19	3/8" - 19	3/8" - 19	29	29	30.7	16	16	37
EPD-08-08-08	1/2" - 14	1/2" - 14	1/2" - 14	34	34	36.5	22	22	44
EPD-12-12-12	3/4" - 14	3/4" - 14	3/4" - 14	41	41	44.1	27	27	55
EPD-16-16-16	1" - 11	1" - 11	1" - 11	46	46	49.3	33	33	61
EPD-20-20-20	1.1/4" - 11	1.1/4" - 11	1.1/4" - 11	51	51				66

† All threads are BSPP for this adaptor

EPF SERIES

BSPT FEMALE x BSPT FEMALE x BSPT FEMALE

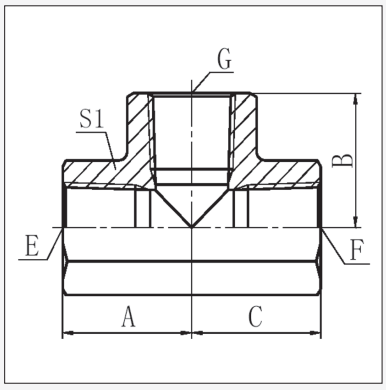

Product Code	Thread			Dimensions mm				
	E (BSPT)	F (BSPT)	G (BSPT)	A	B	C	S1	
EPF-02-02-02	1/8" - 28	1/8" - 28	1/8" - 28	20	20	20	16	
EPF-04-04-04	1/4" - 19	1/4" - 19	1/4" - 19	22.5	22.5	22.5	19	
EPF-06-06-06	3/8" - 19	3/8" - 19	3/8" - 19	26	26	26	24	
EPF-08-08-08	1/2" - 14	1/2" - 14	1/2" - 14	31	31	31	27	
EPF-12-12-12	3/4" - 14	3/4" - 14	3/4" - 14	34	34	34	33	
EPF-16-16-16	1" - 11	1" - 11	1" - 11	42	42	42	41	
EPF-20-20-20	1.1/4" - 11	1.1/4" - 11	1.1/4" - 11	48	48	48	50	
EPF-24-24-24	1.1/2" - 11	1.1/2" - 11	1.1/2" - 11	53	53	53	60	
EPF-32-32-32	2" - 11	2" - 11	2" - 11	62	62	62	70	

EPFG SERIES

BSPP FEMALE X FEMALE X FEMALE

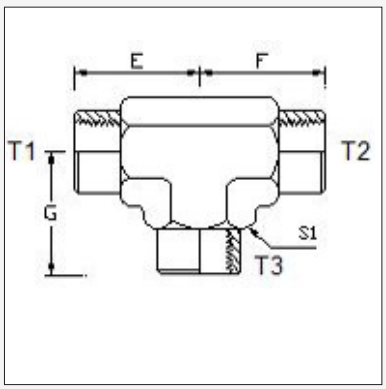

Product code	Thread			Dimensions mm				
	T1 (BSPP)	T2 (BSPP)	T3 (BSPP)	E	F	G	S1	
EPFG-04-04-04	1/4" - 19	1/4" - 19	1/4" - 19	23	23	23	19	
EPFG-06-06-06	3/8" - 19	3/8" - 19	3/8" - 19	26	26	26	24	
EPFG-08-08-08	1/2" - 14	1/2" - 14	1/2" - 14	31	31	31	27	

PIRTEK

This page is part of a complete catalogue containing technical and safety data.
All data must be reviewed when selecting a product.
Pirtek reserve the right to change technical specifications without notice

EPFFM SERIES

BSPP FEMALE $_{SW}$ x BSPP FEMALE $_{SW}$ x BSPT MALE

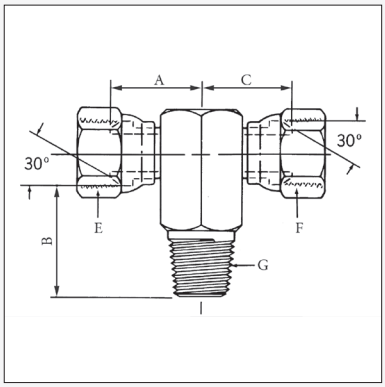

Product Code	Thread			Dimensions mm				
	E(BSPP$_{SW}$)	F(BSPP$_{SW}$)	G (BSPT)	A	B	C		
EPFFM-04-04-04	1/4" - 19	1/4" - 19	1/4" - 19	23.1	31.2	23.1		
EPFFM-06-06-06	3/8" - 19	3/8" - 19	3/8" - 19	27.7	38.9	27.7		
EPFFM-08-08-08	1/2" - 14	1/2" - 14	1/2" - 14	25.4	46	25.4		
EPFFM-12-12-12	3/4" - 14	3/4" - 14	3/4" - 14	34.5	51.6	34.5		
EPFFM-16-16-16	1" - 11	1" - 11	1" - 11	34	60.5	34		

EPFLF SERIES

BSPT FEMALE x BSPT MALE x BSPT FEMALE

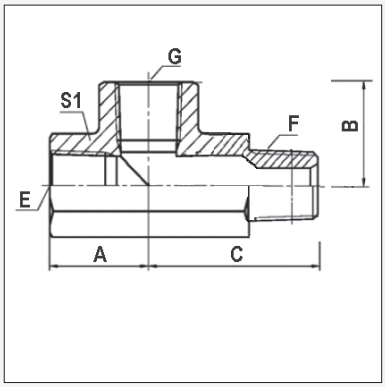

Product Code	Thread			Dimensions mm				
	E (BSPT)	F (BSPT)	G (BSPT)	A	B	C	S1	
EPFLF-04-04-04	1/4" - 19	1/4" - 19	1/4" - 19	22	22	29	19	
EPFLF-06-06-06	3/8" - 19	3/8" - 19	3/8" - 19	26	26	31.5	22	
EPFLF-08-08-08	1/2" - 14	1/2" - 14	1/2" - 14	31	31	38	27	

EPJ SERIES

BSPT MALE x BSPT MALE x BSPT MALE

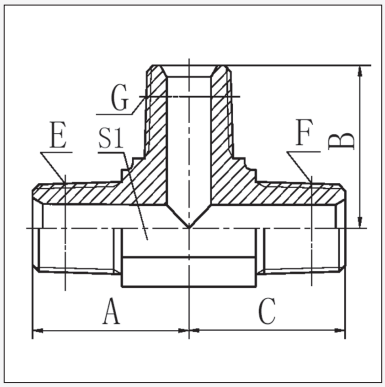

Product Code	Thread			Dimensions mm				
	E (BSPT)	F (BSPT)	G (BSPT)	A	B	C	S1	
EPJ-02-02-02	1/8" - 28	1/8" - 28	1/8" - 28	21	21	21	11	
EPJ-04-04-04	1/4" - 19	1/4" - 19	1/4" - 19	25.5	25.5	25.5	14	
EPJ-06-06-06	3/8" - 19	3/8" - 19	3/8" - 19	28.5	28.5	28.5	16	
EPJ-08-08-08	1/2" - 14	1/2" - 14	1/2" - 14	36	36	36	22	
EPJ-12-12-12	3/4" - 14	3/4" - 14	3/4" - 14	43.5	43.5	43.5	27	
EPJ-16-16-16	1" - 11	1" - 11	1" - 11	50	50	50	33	
EPJ-20-20-20	1.1/4" - 11	1.1/4" - 11	1.1/4" - 11	57.5	57.5	57.5	41	
EPJ-24-24-24	1.1/2" - 11	1.1/2" - 11	1.1/2" - 11	62.5	62.5	62.5	48	
EPJ-32-32-32	2" - 11	2" - 11	2" - 11	75	75	75	63	

PIRTEK

This page is part of a complete catalogue containing technical and safety data.
All data must be reviewed when selecting a product.
Pirtek reserve the right to change technical specifications without notice

TEES

EPK / EPKHD SERIES

NPT FEMALE x NPT FEMALE x NPT FEMALE

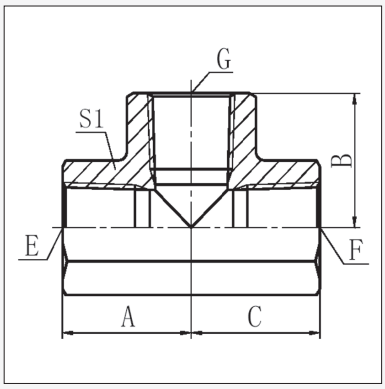

Product Code	Thread			Dimensions mm				
	E (NPT)	F (NPT)	G (NPT)	A	B	C	S1	
EPK-02-02-02	1/8" - 27	1/8" - 27	1/8" - 27	20	20	20	16	
EPK-04-04-04	1/4" - 18	1/4" - 18	1/4" - 18	22.5	22.5	22.5	19	
EPK-06-06-06	3/8" - 18	3/8" - 18	3/8" - 18	26	26	26	24	
EPK-08-08-08	1/2" - 14	1/2" - 14	1/2" - 14	31	31	31	27	
EPK-12-12-12	3/4" - 14	3/4" - 14	3/4" - 14	34	34	34	33	
EPK-16-16-16	1" - 11½	1" - 11½	1" - 11½	42	42	42	41	
EPK-20-20-20	1.1/4" - 11½	1.1/4" - 11½	1.1/4" - 11½					
HEAVY DUTY 10,000 PSI (700 BAR) HIGH PRESSURE SERIES								
EPKHD-04-04-04	1/4" - 18	1/4" - 18	1/4" - 18	22.5	22.5	22.5	24	
EPKHD-06-06-06	3/8" - 18	3/8" - 18	3/8" - 18	22.5	22.5	22.5	27	

EPKKL SERIES

NPT FEMALE x NPT FEMALE x NPT MALE

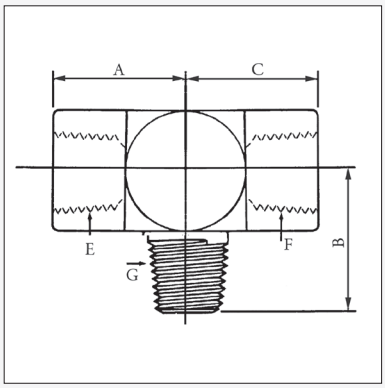

Product Code	Thread			Dimensions mm				
	E (NPT)	F (NPT)	G (NPT)	A	B	C		
EPKKL-04-04-04	1/4" - 18	1/4" - 18	1/4" - 18	22.4	27.7	22.4		

EPKLK SERIES

NPT FEMALE x NPT MALE x NPT FEMALE

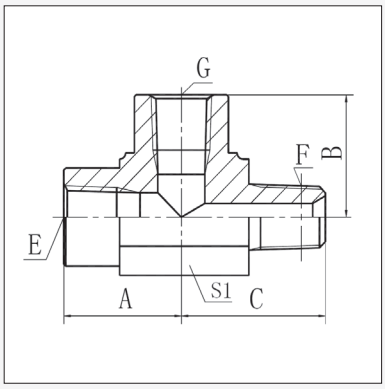

Product Code	Thread			Dimensions mm				
	E (NPT)	F (NPT)	G (NPT)	A	B	C	S1	
EPKLK-02-02-02	1/8" - 27	1/8" - 27	1/8" - 27	20	20	24.5	16	
EPKLK-04-04-04	1/4" - 18	1/4" - 18	1/4" - 18	25	25	28.5	19	
EPKLK-06-06-06	3/8" - 18	3/8" - 18	3/8" - 18	27	27	33.5	24	
EPKLK-08-08-08	1/2" - 14	1/2" - 14	1/2" - 14	35	35	42.5	30	
EPKLK-12-12-12	3/4" - 14	3/4" - 14	3/4" - 14	37	37	45.2	33	
EPKLK-16-16-16	1" - 11½	1" - 11½	1" - 11½	41	44	54.7	41	
EPKLK-20-20-20	1.1/4" - 11½	1.1/4" - 11½	1.1/4" - 11½	48	48	58.5	48	

PIRTEK

This page is part of a complete catalogue containing technical and safety data.
All data must be reviewed when selecting a product.
Pirtek reserve the right to change technical specifications without notice

EPP SERIES

BSPT MALE x BSPP MALE x BSPT MALE

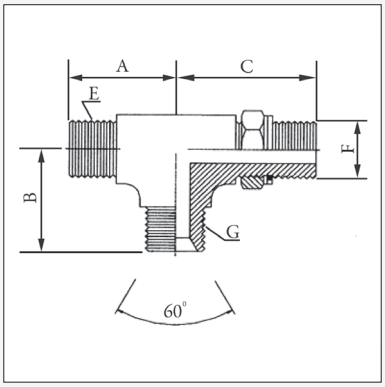

Product Code	Thread			Dimensions mm				
	E (BSPT)	F (BSPP)	G (BSPT)	A	B	C		
EPP-04-04-04	1/4" - 19	1/4" - 19	1/4" - 19	27	27	31.5		

FF1220 SERIES

ORFS MALE x ORFS MALE x ORFS MALE

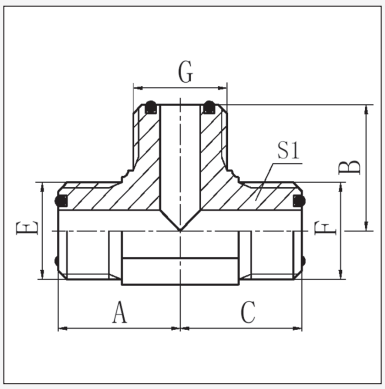

Product Code	Thread			Dimensions mm				
	E (ORFS)	F (ORFS)	G (ORFS)	A	B	C	S1	
FF1220-040404	9/16" - 18	9/16" - 18	9/16" - 18	23	23	23	14	
FF1220-060606	11/16" - 16	11/16" - 16	11/16" - 16	27	27	27	19	
FF1220-080808	13/16" - 16	13/16" - 16	13/16" - 16	31	31	31	22	
FF1220-101010	1" - 14	1" - 14	1" - 14	36.5	36.5	36.5	27	
FF1220-121212	1.3/16" - 12	1.3/16" - 12	1.3/16" - 12	40.3	40.3	40.3	30	
FF1220-161616	1.7/16" - 12	1.7/16" - 12	1.7/16" - 12	44.5	44.5	44.5	36	
FF1220-202020	1.11/16" - 12	1.11/16" - 12	1.11/16" - 12	47.5	47.5	47.5	41	
FF1220-242424	2" - 12	2" - 12	2" - 12	53.5	53.5	53.5	50	

FF1221 SERIES

ORFS MALE x ORFS MALE x NPT MALE

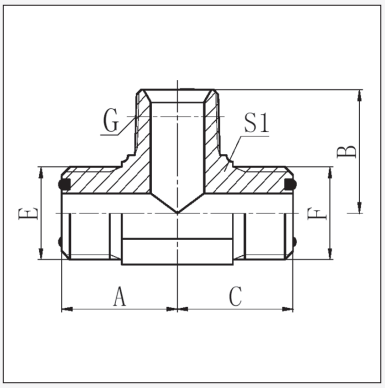

Product Code	Thread			Dimensions mm				
	E (ORFS)	F (ORFS)	G (NPT)	A	B	C	S1	
FF1221-040404	9/16" - 18	9/16" - 18	1/4" - 18	23	25.5	23	14	
FF1221-060606	11/16" - 16	11/16" - 16	3/8" - 18	27	31	27	19	
FF1221-080806	13/16" - 16	13/16" - 16	3/8" - 18	31	33.5	31	22	
FF1221-101008	1" - 14	1" - 14	1/2" - 14	36.5	40	36.5	27	
FF1221-242424	2" - 12	2" - 12	1.1/2" - 11.5	53.5	64.5	53.5	50	

PIRTEK

This page is part of a complete catalogue containing technical and safety data.
All data must be reviewed when selecting a product.
Pirtek reserve the right to change technical specifications without notice

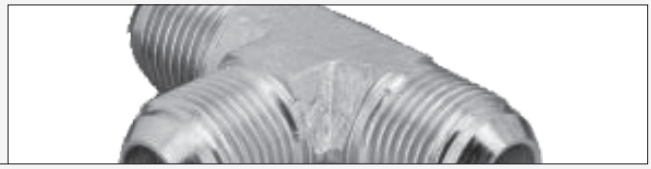

FF1265 SERIES

ORFS MALE x ORFS MALE x UN'O' MALE

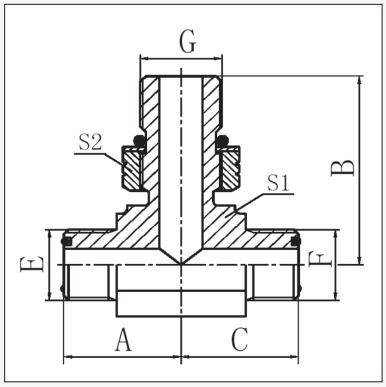

Product Code	Thread			Dimensions mm				
	E (ORFS)	F (ORFS)	G (UN'O')	A	B	C	S1	S2
FF1265-040404	9/16" - 18	9/16" - 18	7/16" - 20	23	30.3	23	14	17
FF1265-060606	11/16" - 16	11/16" - 16	9/16" - 18	27.5	35.5	27.5	19	19
FF1265-080808	13/16" - 16	13/16" - 16	3/4" - 16	31	40.5	31	22	24
FF1265-101010	1" - 14	1" - 14	7/8" - 14	36.5	50.8	36.5	27	27
FF1265-121212	1.3/16" - 12	1.3/16" - 12	1.1/16" - 12	40.3	55.3	40.3	30	32
FF1265-161616	1.7/16" - 12	1.7/16" - 12	1.5/16" - 12	44.5	59.3	44.5	36	41

FF1266 SERIES

UN'O' MALE x ORFS MALE x ORFS MALE

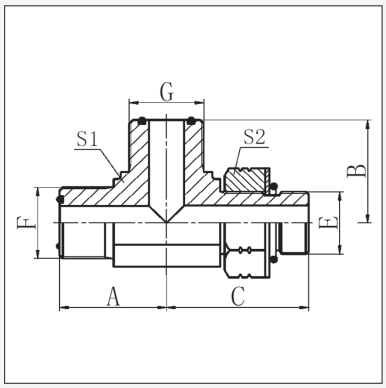

Product Code	Thread			Dimensions mm				
	E (UN'O')	F (ORFS)	G (ORFS)	A	B	C	S1	S2
FF1266-040404	7/16" - 20	9/16" - 18	9/16" - 18	23	23	30	14	17
FF1266-060606	9/16" - 18	11/16" - 16	11/16" - 16	27.5	27.5	35.5	19	19
FF1266-080808	3/4" - 16	13/16" - 16	13/16" - 16	31	31	40.5	22	24
FF1266-101010	7/8" - 14	1" - 14	1" - 14	36.5	36.5	50.8	27	27
FF1266-121212	1.1/16" - 12	1.3/16" - 12	1.3/16" - 12	40.3	40.3	55.3	30	32
FF1266-161616	1.5/16" - 12	1.7/16" - 12	1.7/16" - 12	44.5	44.5	59.3	36	41
FF1266-202020	1.5/8" - 12	1.11/16" -12	1.11/16" - 12	47.5	46.7	59.7	40.8	50.0
FF1266-242424	1.7/8" - 12	2" -12	2" - 12	46	47.6	64	50.8	53.9

FF1248 SERIES

ORFS MALE x ORFS FEMALE x ORFS MALE

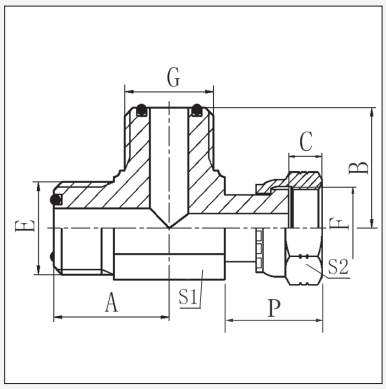

Product Code	Thread			Dimensions mm					
	E (ORFS)	F (ORFS)	G (ORFS)	A	B	C	S1	S2	P
FF1248-040404	9/16" - 18	9/16" - 18	9/16" - 18	23	23	8.5	14	19	37
FF1248-060606	11/16" - 16	11/16" - 16	11/16" - 16	27.5	27.5	10	19	22	42
FF1248-080808	13/16" - 16	13/16" - 16	13/16" - 16	31	31	11	22	27	54
FF1248-101010	1" - 14	1" - 14	1" - 14	36.5	36.5	13.5	27	30	59
FF1248-121212	1.3/16" - 12	1.3/16" - 12	1.3/16" - 12	40.3	40.3	15	30	36	66
FF1248-161616	1.7/16" - 12	1.7/16" - 12	1.7/16" - 12	44.5	44.5	15	36	41	74
FF1248-202020	1.11/16" - 12	1.11/16" - 12	1.11/16" - 12	47.5	47.5	15	41	50	79
FF1248-242424	2" - 12	2" - 12	2" - 12	53.5	53.5	15	50	60	83

PIRTEK
This page is part of a complete catalogue containing technical and safety data.
All data must be reviewed when selecting a product.
Pirtek reserve the right to change technical specifications without notice

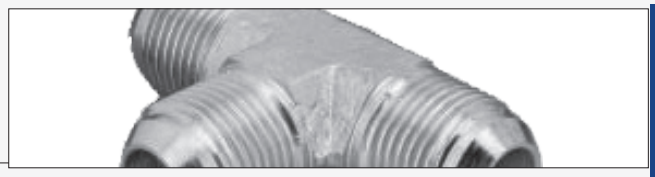

FF1227 SERIES

ORFS MALE x ORFS MALE x ORFS FEMALE

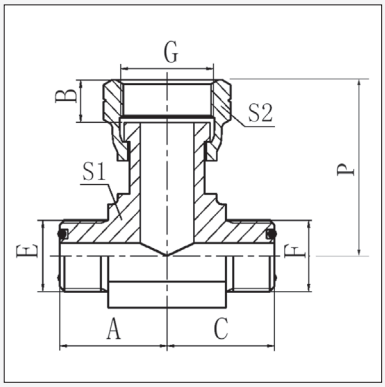

Product Code	Thread			Dimensions mm					
	E (ORFS)	F (ORFS)	G (ORFS)	A	B	C	S1	S2	P
FF1227-040404	9/16" - 18	9/16" - 18	9/16" - 18	23	8.5	23	14	19	37
FF1227-060606	11/16" - 16	11/16" - 16	11/16" - 16	27.5	10	27.5	19	22	42
FF1227-080808	13/16" - 16	13/16" - 16	13/16" - 16	31	11	31	22	27	54
FF1227-101010	1" - 14	1" - 14	1" - 14	36.5	13.5	36.5	27	30	59
FF1227-121212	1.3/16" - 12	1.3/16" - 12	1.3/16" - 12	40.3	15	40.3	30	36	66
FF1227-161616	1.7/16" - 12	1.7/16" - 12	1.7/16" - 12	44.5	15	44.5	36	41	74
FF1227-202020	1.11/16" - 12	1.11/16" - 12	1.11/16" - 12	47.5	15	47.5	41	50	79
FF1227-242424	2" - 12	2" - 12	2" - 12	53.5	15	53.5	50	60	83

KMA SERIES

METRIC JIS MALE x JIS FEMALE x JIS MALE

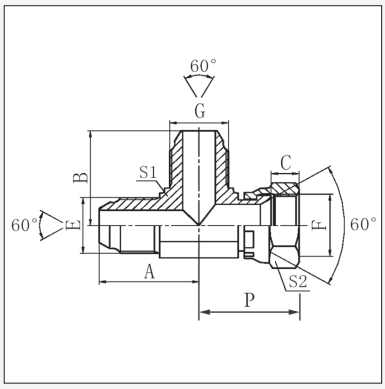

Product Code	Thread			Dimensions mm					
	E(JISMet)	F(JISMet)	G(JISMet)	A	B	C	S1	S2	P
KMA-14-14-14	M14 -1.5	M14 -1.5	M14 -1.5	26.5	26.5	10.5	14	19	32
KMA-16-16-16	M16 -1.5	M16 -1.5	M16 -1.5	29.5	29.5	10	16	22	33
KMA-18-18-18	M18 -1.5	M18 -1.5	M18 -1.5	30.8	30.8	11.5	19	24	35
KMA-22-22-22	M22 -1.5	M22 -1.5	M22 -1.5	35.5	35.5	14	22	27	41

KYA SERIES METRIC JIS MALE x METRIC O-RING MALE x JIS MALE

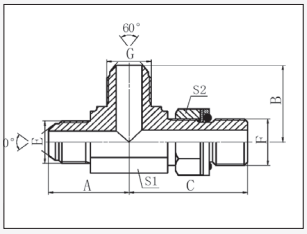

Product Code	Thread			Dimensions mm					
	E(JISMet)	F(METRIC)	G(JISMet)	A	B	C	S1	S2	
KYA-14-14-20	M14 -1.5	M14 -1.5	M20 -1.5	30	30	37	19	27	
KYA-18-18-14	M18 -1.5	M18 -1.5	M14 -1.5	30.5	30.5	35.5	19	19	
KYA-22-22-20	M22 -1.5	M22 -1.5	M20 -1.5	45.5		40	22	27	
KYA-22-22-22	M22 -1.5	M22 -1.5	M22 -1.5	45.5	45.5	40	22	27	

PIRTEK

This page is part of a complete catalogue containing technical and safety data.
All data must be reviewed when selecting a product.
Pirtek reserve the right to change technical specifications without notice

TEES / TEST POINT/ CROSS ADAPTORS

TEST POINT ADAPTORS

MFBB BSP In-Line Test Point Adaptor

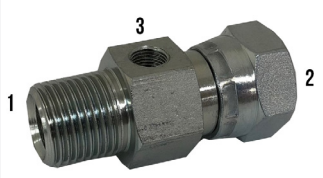

Product Code	BSPT MALE ①	BSP FEMALE ②	BSPT FEMALE ③
MFBB-04-04-02	1/4" - 19	1/4" - 19	1/8"
MFBB-06-06-02	3/8" - 19	3/8" - 19	1/8" - 28
MFBB-08-08-02	1/2" - 14	1/2" - 14	1/8" - 28
MFBB-12-12-02	3/4" - 14	3/4" - 14	1/8" - 28
MFBB-16-16-02	1"-11	1"-16	1/8"-28

Note :- that the Test Point is installed via a 1/8" BSPT port & is ordered seperately

MFFB ORFS In-Line Test Point Adaptor

Product Code	ORFS MALE ①	ORFS FEMALE ②	BSPT FEMALE ③
MFFB-04-04-02	9/16" - 18	9/16" - 18	1/8" - 28
MFFB-06-06-02	11/16" - 16	11/16" - 16	1/8" - 28
MFFB-08-08-02	13/16" - 16	13/16" - 16	1/8" - 28
MFFB-10-10-02	1" - 14	1" - 14	1/8" - 28
MFFB-12-12-02	1.3/16" - 12	1.3/16" - 12	1/8"- 28
MFFB-16-16-02	1.7/16" - 12	1.7/16" - 12	1/8"- 28

Note:- that the Test Point is installed via a 1/8" BSPT port & is ordered seperately

MFJB JIC In-Line Test Point Adaptor

Product Code	JIC MALE ①	JIC FEMALE ②	BSPT FEMALE ③
MFJB-07-07-02	7/16" - 20	7/16" - 20	1/8" - 28
MFJB-09-09-02	9/16" - 18	9/16" - 18	1/8" - 28
MFJB-12-12-02	3/4" - 16	3/4" - 16	1/8" - 28
MFJB-14-14-02	7/8" - 14	7/8" - 14	1/8" - 28
MFJB-17-17-02	1.1/16" - 12	1.1/16" - 12	1/8" - 28
MFJB-21-21-02	1.5/16" - 12	1.5/16" - 12	1/8" - 28

Note:- that the Test Point is installed via a 1/8" BSPT port & is ordered seperately

MFJU JIC In-Line Test Point (UNO) Adaptor

Product Code	JIC MALE ①	JIC FEMALE ②	UNO FEMALE ③
MFJU-07-07-07	7/16" - 20	7/16" - 20	7/16" - 20
MFJU-09-09-07	9/16" - 18	9/16" - 18	7/16" - 20
MFJU-12-12-07	3/4" - 16	3/4" - 16	7/16" - 20
MFJU-14-14-07	7/8" - 14	7/8" - 14	7/16" - 20
MFJU-17-17-07	1.1/16" - 12	1.1/16" - 12	7/16" - 20
MFJU-21-21-07	1.5/16" - 12	1.5/16" - 12	7/16" - 20

Note:- that the test point is installed via a 7/16" UNO port & is ordered seperately

FF1229 SERIES 4-WAY EQUAL ORFS MALE

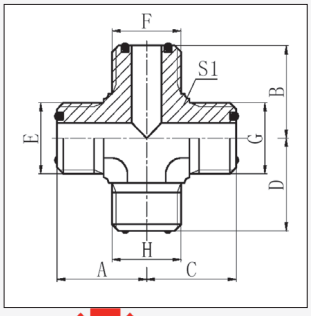

Product Code	Thread	Dimensions mm					
	E, F, G, H (ORFS)	A	B	C	D	S1	
FF1229-04040404	9/16" - 18	23	23	23	23	14	
FF1229-06060606	11/16" - 16	27	27	27	27	19	
FF1229-08080808	13/16" - 16	31	31	31	31	22	
FF1229-10101010	1" - 14	36.5	36.5	36.5	36.5	27	
FF1229-12121212	1.3/16" - 12	40.3	40.3	40.3	40.3	30	
FF1229-16161616	1.7/16" - 12	44.5	44.5	44.5	44.5	36	

PIRTEK

This page is part of a complete catalogue containing technical and safety data.
All data must be reviewed when selecting a product.
Pirtek reserve the right to change technical specifications without notice

SECTION 3
90° ELBOWS

			PAGE
CAA	JIC x JIC	M / M	**D 32**
CAB / CABI	JIC x JIC	M / F_{SW}	**D 32**
CAH	JIC BULKHEAD	M / M	**D 32**
CMJ	METRIC x JIC	M / M	**D33**
CEA	UN`O´ x JIC	M / M	**D 33**
CEAS	UN'O' SWIVEL x JIC	M / M	**D 34**
CED	UN`O´ x BSPP	M / F_{SW}	**D 34**
CEPN	UN`O´ x NPT FIXED	M / F	**D 34**
CEJ	UN`O´ x BSPT	M / M	**D 35**
CFA	BSPP x JIC	M / M	**D 35**
CFJ	BSPP x BSPT	M / M	**D 36**
CLA	BSPT FIXED x JIC	F / M	**D 36**
CLAN	NPT FIXED x JIC	F / M	**D 37**
CLF	NPTF x NPTF LOW PROFILE	M / F	**D 37**
CLJ	BSPT x BSPT FIXED	M / F	**D 37**
CLJN	NPT x NPT FIXED	M / F	**D 38**
CLP	BSPT FIXED x BSPT FIXED	F / F	**D 38**
CLPN	NPT FIXED x NPT FIXED	F / F	**D 38**
CSA	UN`O´ EXTENDED x JIC	M / M	**D 39**
CVA	BSPT x JIC	M / M	**D 39**
CVAN	NPT x JIC	M / M	**D 40**
CVD	BSPT x BSPP	M / F_{SW}	**D 41**
CVDN	NPT x NPSM	M / F_{SW}	**D 42**
CVDPA	BSPP x BSPP	M / F_{SW}	**D 42**
CVE	BSPT x SAE	M / M	**D 42**
CVF	BSPT x JIC	M / F_{SW}	**D 43**
CVJ / CVJN	BSPT x BSPT / NPT x NPT	M / M	**D 43**
FF1208	ORFS x NPT	M / M	**D 44**
FF1236	ORFS x ORFS	M / F_{SW}	**D 44**
FF1238	ORFS x UN`O´	M / M	**D 45**
FF1239	UN'O' x ORFS	M / F_{SW}	**D 45**
FF1291	BSPP x ORFS	M / M	**D 46**
CVDJ	JIS BSP x JIS BSP	M / F	**D 46**
KAB	JIS MET x JIS MET	M / F_{SW}	**D 46**
KEA	JIS MET x JIS MET `O´ RING	M / M	**D 47**

PIRTEK

This page is part of a complete catalogue containing technical and safety data.
All data must be reviewed when selecting a product.
Pirtek reserve the right to change technical specifications without notice

90° ELBOWS

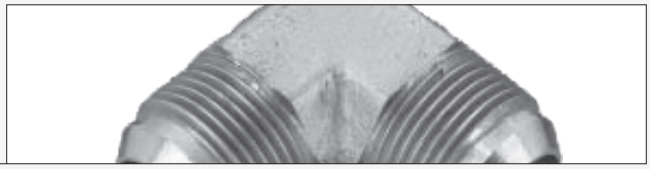

CAA SERIES
JIC MALE x JIC MALE

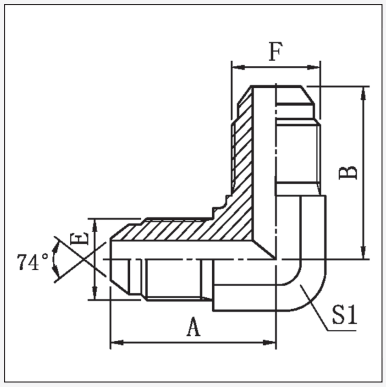

Product Code	Thread		Dimensions mm				
	E (JIC)	F (JIC)	A	B	S1		
CAA-07-07	7/16" - 20	7/16" - 20	24.5	24.5	11		
CAA-08-08	1/2" - 20	1/2" - 20	26.6	26.6	14		
CAA-09-09	9/16" - 18	9/16" - 18	26.9	26.9	14		
CAA-10-10 †	5/8" - 18	5/8" - 18					
CAA-12-12	3/4" - 16	3/4" - 16	32	32	19		
CAA-14-12	7/8" - 14	3/4" - 16	37.8	34.8	22		
CAA-14-14	7/8" - 14	7/8" - 14	37.8	37.8	22		
CAA-17-14	1.1/16" - 12	7/8" - 14	44.2	41	27		
CAA-17-17	1.1/16" - 12	1.1/16" - 12	44.2	44.2	27		
CAA-21-17	1.5/16" - 12	1.1/16" - 12	49	44.2	33		
CAA-21-21	1.5/16" - 12	1.5/16" - 12	49	49	33		
CAA-26-26	1.5/8" - 12	1.5/8" - 12	55.5	55.5	41		
CAA-30-30	1.7/8" - 12	1.7/8" - 12	62.5	62.5	48		

† SAE Thread Form

CAB SERIES
JIC MALE x JIC FEMALE

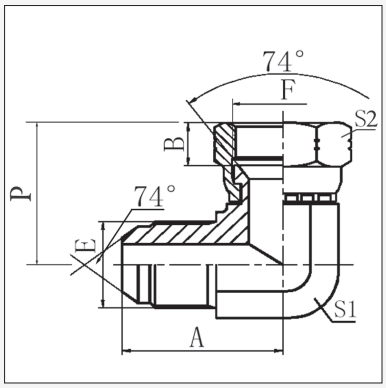

Product Code	Thread		Dimensions mm				
	E (JIC)	F (JIC)	A	B	S1	S2	P
CAB-07-07 [a]	7/16" - 20	7/16" - 20	22.5	9	11	15	25.5
CAB-08-08	1/2" - 20	1/2" - 20	24	9.5	14	17	27
CAB-09-09 [a]	9/16" - 18	9/16" - 18	27	10.5	14	19	32
CAB-10-10 †	5/8" - 18	5/8" - 18	30	11.3	16	22	
CAB-12-12 [a]	3/4" - 16	3/4" - 16	31.5	11	19	24	35
CAB-14-14	7/8" - 14	7/8" - 14	36.5	13	22	27	41
CAB-17-14	1.1/16" - 12	7/8" - 14	43	12.5	27	27	42
CAB-17-17	1.1/16" - 12	1.1/16" - 12	42	15	27	32	44.5
CAB-19-19	1.3/16" - 12	1.3/16" - 12	44	15	30	36	48
CAB-21-21 [a]	1.5/16" - 12	1.5/16" - 12	46	16	33	41	51
CAB-26-26	1.5/8" - 12	1.5/8" - 12	52	17	41	50	59
CAB-30-30	1.7/8" - 12	1.7/8" - 12	59	20	48	55	66
CAB-40-40	2.1/2"-12	2.1/2"-12	75.5	24.5	63	75	

† SAE Thread Form

[a] Also available with Imperial dimensioned hex nut. ***Product Code CABI***

CAH SERIES
JIC MALE x JIC MALE BULKHEAD

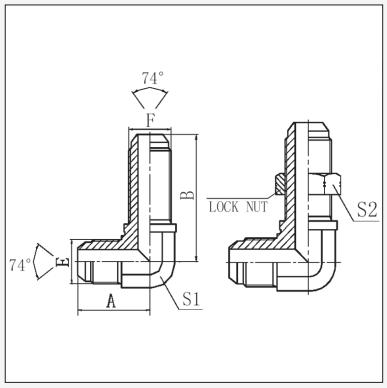

Product Code	Thread		Dimensions mm				
	E (JIC)	F (JIC)	A	B	S1	S2	
CAH-07-07	7/16" - 20	7/16" - 20	24.5	40.4	11	17	
CAH-09-09	9/16" - 18	9/16" - 18	27.7	46	14	22	
CAH-10-10 †	5/8" - 18	5/8" - 18	30.5	54.5	19	24	
CAH-12-12	3/4" - 16	3/4" - 16	34.5	53.5	19	24	
CAH-14-14	7/8" - 14	5/8" - 18	39.6	60.7	22	30	
CAH-17-17	1.1/16" - 12	9/16" - 18	45.2	67.8	27	36	
CAH-21-21	1.5/16" - 12	1.5/16" - 12	50	71	33	41	
CAH-26-26	1.5/8" - 12	1.5/8" - 12	57.5	79.2	41	50	

This page is part of a complete catalogue containing technical and safety data.
All data must be reviewed when selecting a product.
Pirtek reserve the right to change technical specifications without notice

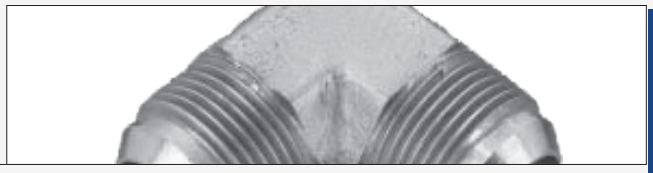

CMJ SERIES
METRIC MALE x JIC MALE

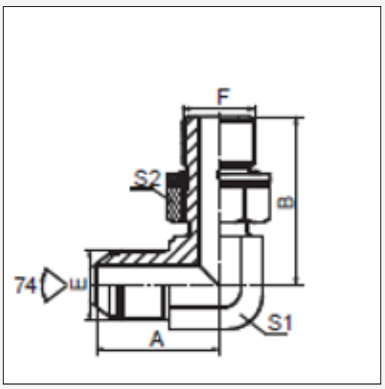

Product Code	Thread		Dimensions mm			
	F(METRIC)	E (JIC)	A	B	S1	S2
CMJ-12-07	M12X1.5	7/16"X20	24.5	30.3	11	17
CMJ-14-09	M14X1.5	9/16"X18	26.9	32	14	19
CMJ-16-09	M16X1.5	9/16"X18	29	35	19	19
CMJ-18-09	M18X1.5	9/16"X18	30	37	19	24
CMJ-18-12	M18x1.5	3/4"x16	32	37	19	24
CMJ-22-12	M22X1.5	3/4"X16	34.8	40.2	22	27
CMJ-22-14	M22X1.5	7/8"X14	38	42.5	22	27
CMJ-27-17	M27X2	1.1/16"X12	44.2	48.5	27	32

CEA SERIES
UN'O' MALE x JIC MALE

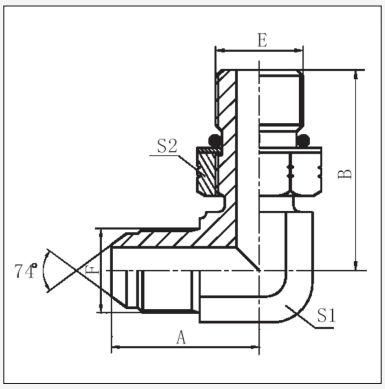

Product Code	Thread		Dimensions mm			
	E (UN'O')	F (JIC)	A	B	S1	S2
CEA-07-07	7/16" - 20	7/16" - 20	24.5	27.2	11	17
CEA-07-09	7/16" - 20	9/16" - 18	26.9	30	14	17
CEA-08-08	1/2" - 20	1/2" - 20	26.6	29	14	17
CEA-08-09	1/2" - 20	9/16" - 18	26.9	29.9	14	17
CEA-09-07	9/16" - 18	7/16" - 20	26.6	31.8	14	19
CEA-09-09	9/16" - 18	9/16" - 18	26.9	31.8	14	19
CEA-09-10	9/16" - 18	5/8" - 18 †				
CEA-09-12	9/16" - 18	3/4" - 16	33	33.5	19	19
CEA-12-09	3/4" - 16	9/16" - 18	30	36.8	19	24
CEA-12-12	3/4" - 16	3/4" - 16	33	36.8	19	24
CEA-12-14	3/4" - 16	7/8" - 14	38	40	22	27
CEA-12-17	3/4" - 16	1.1/16" - 12	45	44	27	24
CEA-14-09	7/8" - 14	9/16" - 18	32	44	22	27
CEA-14-12	7/8" - 14	3/4" - 16	34.8	44	22	27
CEA-14-14	7/8" - 14	7/8" - 14	37.8	44	22	27
CEA-14-17	7/8" - 14	1.1/16" - 12	44.2	47	27	27
CEA-17-09	1.1/16"-12	9/16"-18	35.5	51	27	32
CEA-17-12	1.1/16" - 12	3/4" - 16	37.9	51	27	32
CEA-17-14	1.1/16" - 12	7/8" - 14	41	51	27	32
CEA-17-17	1.1/16" - 12	1.1/16" - 12	44.2	51	27	32
CEA-17-19	1.1/16" - 12	1.3/16" - 12				
CEA-17-21	1.1/16" - 12	1.5/16" - 12	48.8	54.5	33	32
CEA-19-19	1.3/16" - 12	1.3/16" - 12	47.5	53	30	36
CEA-21-17	1.5/16" - 12	1.1/16" - 12	47.8	54.5	33	41
CEA-21-21	1.5/16" - 12	1.5/16" - 12	48.8	54.5	33	41
CEA-21-26	1.5/16" - 12	1.5/8" - 12	55.5	59.5	41	41
CEA-26-21	1.5/8" - 12	1.5/16" - 12	53.8	59	41	50
CEA-26-26	1.5/8" - 12	1.5/8" - 12	55.3	59	41	50
CEA-30-30	1.7/8" - 12	1.7/8" - 12	62.5	63	48	55

† SAE Thread Form

PIRTEK

This page is part of a complete catalogue containing technical and safety data.
All data must be reviewed when selecting a product.
Pirtek reserve the right to change technical specifications without notice

90° ELBOWS

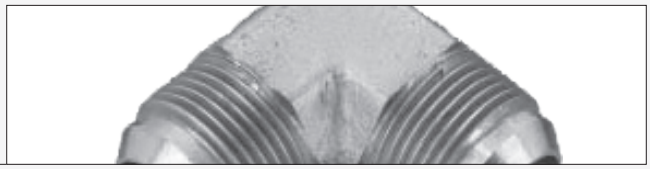

CEAS SERIES
UNO MALE SWIVEL X JIC MALE

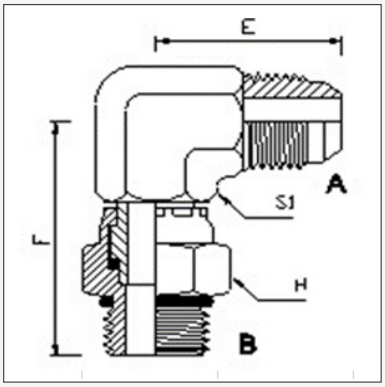

Product Code	Thread		Dimensions mm			
	A (JIC)	B (UNO)	E	F	S1	H
CEAS-12-12	3/4"-16	3/4"-16	32	48	19	22.2
CEAS-14-12	3/4"-16	7/8"-14	34	53	22	25.4
CEAS-17-17	1.1/16- 16	1.1/16-12	42	54	27	31.8

CED SERIES
UN'O' MALE x BSPP FEMALE

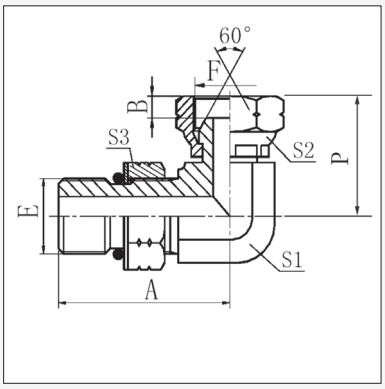

Product Code	Thread		Dimensions mm					
	E (UN'O')	F (BSPP)	A	B	S1	S2	S3	P
CED-09-04	9/16" - 18	1/4" - 19	31.8	5.5	14	19	19	33
CED-09-06	9/16" - 18	3/8" - 19	33.3	6.3	16	19	22	36
CED-12-06	3/4" - 16	3/8" - 19	36.8	6.3	19	24	22	36
CED-12-08	3/4" - 16	1/2" - 14	36.8	7.5	19	24	27	42
CED-14-08	7/8" - 14	1/2" - 14	44	7.5	22	27	27	42
CED-17-12	1.1/16" - 12	3/4" - 14	51	10.9	27	32	32	50
CED-21-16	1.5/16" - 12	1" - 11	54.5	11.7	33	41	41	59

CEPN SERIES
UN'O' MALE x NPT FIXED FEMALE

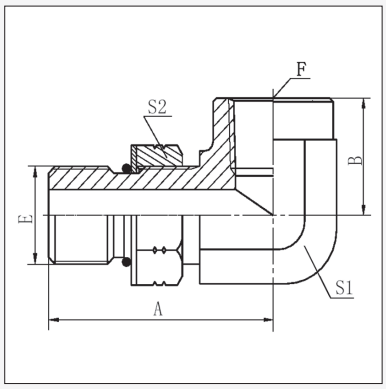

Product Code	Thread		Dimensions mm			
	E (UN'O')	F (NPT)	A	B	S1	S2
CEPN-12-06	3/4" - 16	3/8" - 19	40	26.5	22	24
CEPN-12-08	3/4" - 16	1/2" - 14	43	31.2	27	24
CEPN-12-12	3/4" - 16	3/4" - 14				24
CEPN-14-08	7/8" - 14	1/2" - 14	48	31.2	27	27
CEPN-17-08	1.1/16" - 12	1/2" - 14	51	31.2	27	32
CEPN-17-12	1.1/16" - 12	3/4" - 14	55	34.5	33	32

This page is part of a complete catalogue containing technical and safety data.
All data must be reviewed when selecting a product.
Pirtek reserve the right to change technical specifications without notice

90° ELBOWS

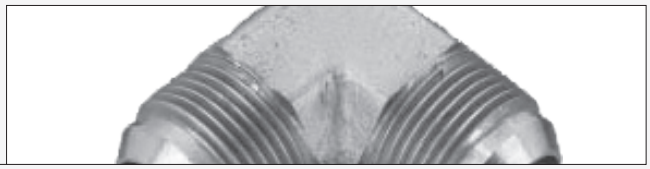

CEJ SERIES
UN'O' MALE x BSPT MALE

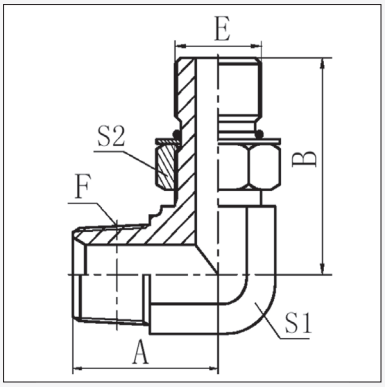

Product Code	Thread		Dimensions mm				
	E (UN'O')	F (BSPT)	A	B	S1	S2	
CEJ-07-02	7/16" - 20	1/8" - 28					
CEJ-07-04	7/16" - 20	1/4" - 19	26	31	14	17	
CEJ-09-04	9/16" - 18	1/4" - 19	26	31.8	14	19	
CEJ-09-06	9/16" - 18	3/8" - 19	28.5	33.3	16	19	
CEJ-12-06	3/4" - 16	3/8" - 19	31	37	19	24	
CEJ-12-08	3/4" - 16	1/2" - 20	37	40.5	22	24	
CEJ-14-06	7/8" - 14	3/8" - 19	33.5	44	22	27	
CEJ-14-08	7/8" - 14	1/2" - 14	38	44	22	27	
CEJ-14-12	7/8" - 14	3/4" - 14	43	47	27	27	
CEJ-17-08	1.1/16" - 12	1/2" - 14	41	51	27	32	
CEJ-17-12	1.1/16" - 12	3/4" - 14	43.5	51	27	32	
CEJ-17-16	1.1/16" - 12	1" - 11					
CEJ-21-12	1.5/16" - 12	3/4" - 14	47.5	54.5	33	41	
CEJ-21-16	1.5/16" - 12	1" - 11					
CEJ-26-16	1.5/8" - 12	1" - 11	55.5	59	41	50	
CEJ-26-20	1.5/8" - 12	1.1/4" - 11	56.5	59.5	41	50	
CEJ-30-24	1.7/8" - 12	1.1/2" - 11					

CFA SERIES
BSPP MALE x JIC MALE

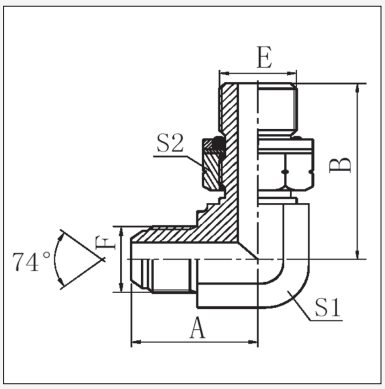

Product Code	Thread		Dimensions mm			
	E (BSPP)	F (JIC)	A	B	S1	S2
CFA-02-07	1/8" - 28	7/16" - 20	24.5	26.2	11	14
CFA-02-09	1/8"X28	9/16"X18	26.9	28	14	14
CFA-04-07	1/4" - 19	7/16" - 20	26.6	31.3	14	19
CFA-04-08	1/4" - 19	1/2" - 20	27	32	14	19
CFA-04-09	1/4" - 19	9/16" - 18	26.9	31.3	14	19
CFA-04-12	1/4" - 19	3/4" - 16	32	31.3	19	19
CFA-06-07	3/8" - 19	7/16" - 20	28.5	36.5	-	-
CFA-06-09	3/8" - 19	9/16" - 18	28.5	35.8	16	22
CFA-06-14	3/8" - 19	7/8" - 14				
CFA-08-07	1/2":-14	7/16"-20	27	32	14	19
CFA-08-09	1/2" - 14	9/16" - 18	32.5	43.2	22	27
CFA-08-12	1/2" - 14	3/4" - 16	34.8	43.2	22	27
CFA-08-14	1/2" - 14	7/8" - 14	37.8	43.2	22	27
CFA-08-17	1/2" - 14	1.1/16" - 12	44.2	46.5	27	27
CFA-12-12	3/4" - 14	3/4" - 16	37.9	49.3	27	32
CFA-12-14	3/4" - 14	7/8" - 14	41	49.3	27	32
CFA-12-17	3/4" - 14	1.1/16" - 12	44.2	49.3	27	32
CFA-12-21	3/4" - 14	1.5/16" - 12	49	53	33	32
CFA-16-17	1" - 11	1.1/16" - 12	48	53	33	41
CFA-16-21	1" - 11	1.5/16" - 12	49	53	33	41
CFA-16-26	1" - 11	1.5/8" - 12	55.5	58	41	41
CFA-20-17	1.1/4"-11	1.1/16"-12	53.5	59.5	41	50
CFA-20-21	1.1/4" - 11	1.5/16" - 12	53.8	58	41	50
CFA-20-26	1.1/4" - 11	1.5/8" - 12	55.5	58	41	50
CFA-24-26	1.1/2" - 11	1.5/8" - 12	56	63	48	55
CFA-24-30	1.1/2" - 11	1.7/8" - 12	60	60	47.5	54.8

See page D90 for replacement retaining ring and O-Ring for the BSPP thread (Product Codes **RRB** and **RROB**)

90° ELBOWS

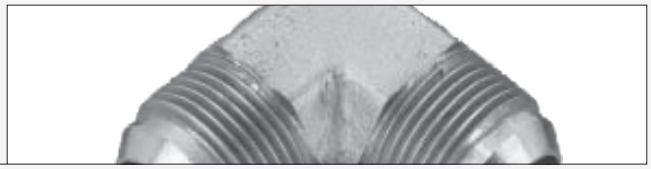

CFJ SERIES
BSPP MALE x BSPT MALE

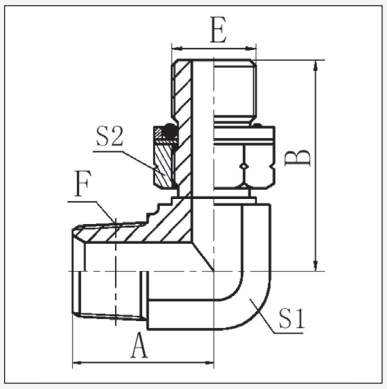

See page D90 for replacement retaining ring and O-Ring for the BSPP thread (Product Codes **RRB** and **RROB**)

Product Code	Thread		Dimensions mm				
	E (BSPP)	F (BSPT)	A	B	S1	S2	
CFJ-02-02 †	1/8" - 28	1/8" - 28					
CFJ-04-04	1/4" - 19	1/4" - 19	25.5	31.3	14	19	
CFJ-06-04	3/8" - 19	1/4" - 19	26.5	35.8	16	22	
CFJ-06-06	3/8" - 19	3/8" - 19	27.5	36.8	16	22	
CFJ-06-08	3/8" - 19	1/2" - 14	38	40	21	22	
CFJ-08-06	1/2" - 14	3/8" - 19	32.5	43.2	22	27	
CFJ-08-08	1/2" - 14	1/2" - 14	37	43.2	22	27	
CFJ-08-12	1/2" - 14	3/4" - 14	45	47	26	27	
CFJ-12-08	3/4" - 14	1/2" - 14	39.5	49.3	27	32	
CFJ-12-12	3/4" - 14	3/4" - 14	43	49.3	27	32	
CFJ-12-16	3/4" - 14	1" - 11	50	53	33	27	
CFJ-16-12	1" - 11	3/4" - 14	48	53	33	41	
CFJ-16-16	1" - 11	1" - 11	50	53	33	41	
CFJ-20-16	1.1/4" - 11	1" - 11	55.5	58	41	50	
CFJ-20-20	1.1/4" - 11	1.1/4" - 11	57	58	41	50	
CFJ-24-24	1.1/2" - 11	1.1/2" - 11	62.5	63	48	55	

† Non-Stocked, available on request

CLA SERIES
BSPT FIXED FEMALE x JIC MALE

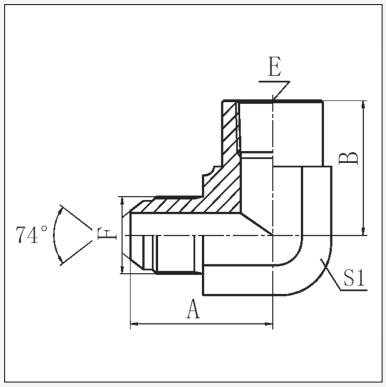

Product Code	Thread		Dimensions mm				
	E (BSPT)	F (JIC)	A	B	S1		
CLA-02-07	1/8" - 28	7/16" - 20	27.5	20	16		
CLA-04-09	1/4" - 19	9/16" - 18	30.5	25	19		
CLA-06-12	3/8" - 19	3/4" - 16	36	27	24		
CLA-08-12	1/2" - 14	3/4" - 16	39.5	31.5	30		
CLA-08-14	1/2" - 14	7/8" - 14	42.5	31.5	30		
CLA-12-17	3/4" - 14	1.1/16" - 12	48	37	33		
CLA-16-21	1" - 11	1.5/16" - 12	53	43	41		

PIRTEK

This page is part of a complete catalogue containing technical and safety data.
All data must be reviewed when selecting a product.
Pirtek reserve the right to change technical specifications without notice

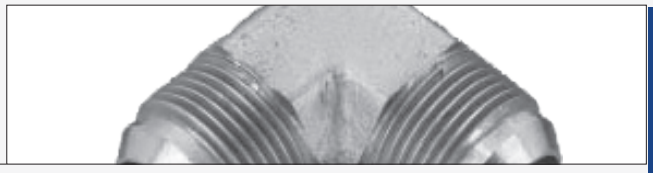

CLAN SERIES

NPT FIXED FEMALE x JIC MALE

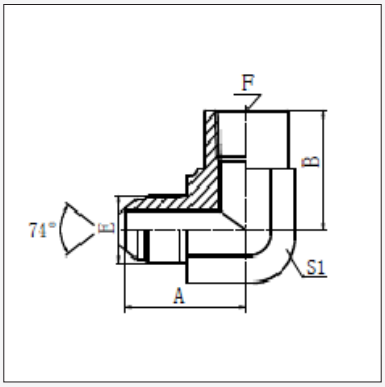

Product Code	Thread		Dimensions mm				
	E (NPT)	F (JIC)	A	B	S1		
CLAN-04-07	1/4" - 19	7/16" - 20	30.9	22.4	19		
CLAN-08-12	1/2" - 14	3/4" - 16	39.5	31.2	30		
CLAN-08-17	1/2" - 14	1.1/16" - 12	46	31.2	30		
CLAN-16-21	1" - 11½	1.5/16" - 12	55.1	41.1	41		

CLF SERIES

NPT MALE x NPT FEMALE LOW PROFILE

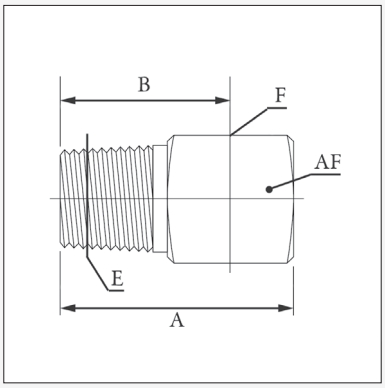

Product Code	Thread		Dimensions mm				
	E (NPT)	F (NPT)	A	B	AF		
CLF-02-02	1/8" - 27	1/8" - 27	25.9	19.1	12.7		
CLF-04-04	1/4" - 18	1/4" - 18	51	39.9	22.2		
CLF-06-06	3/8" - 18	3/8" - 18	50.9	39.8	22.2		
CLF-08-08	1/2" - 14	1/2" - 14	65	50.8	28.5		

CLJ SERIES

BSPT MALE x BSPT FIXED FEMALE

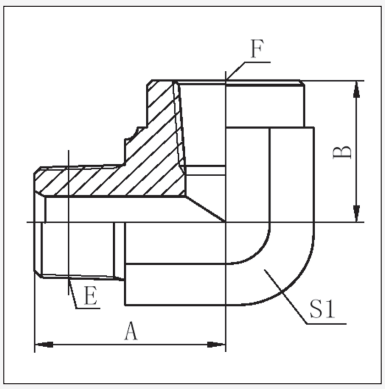

Product Code	Thread		Dimensions mm				
	E (BSPT)	F (BSPT)	A	B	S1		
CLJ-02-02	1/8" - 28	1/8" - 28	24.5	23	16		
CLJ-04-04	1/4" - 19	1/4" - 19	28.5	25	19		
CLJ-06-06	3/8" - 19	3/8" - 19	33.5	25	24		
CLJ-08-06	1/2" - 14	3/8" - 19	40.8	25	30		
CLJ-08-08	1/2" - 14	1/2" - 14	40.8	31.5	30		
CLJ-12-12	3/4" - 14	3/4" - 14	47.5	37	33		
CLJ-16-16	1" - 11	1" - 11	56.5	43	41		
CLJ-20-20	1.1/4" - 11	1.1/4" - 11	61	50	48		

90° ELBOWS

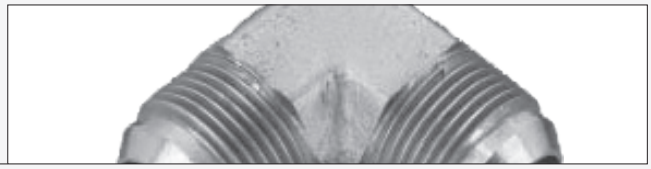

CLJN SERIES
NPT MALE x NPTF FIXED FEMALE

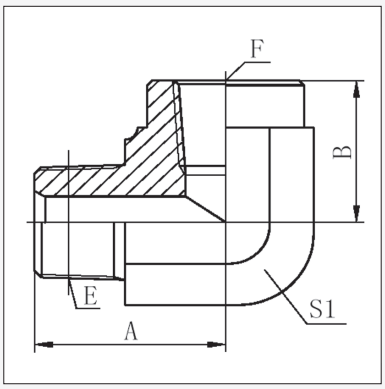

Product Code	Thread		Dimensions mm				
	E (NPT)	F (NPT)	A	B	S1		
CLJN-04-04	1/4" - 18	1/4" - 18	28	22.4	19		
CLJN-06-06	3/8" - 18	3/8" - 18	33.5	25	24		
CLJN-08-08	1/2" - 14	1/2" - 14	41.2	31.2	30		
CLJN-12-12	3/4" - 14	3/4" - 14	45.2	34.5	33		
CLJN-16-16	1" - 11½	1" - 11½	54.5	41.1	41		
CLJN-20-20	1.1/4" - 11½	1.1/4" - 11½	63	43.2	48		
CLJN-24-24	1.1/2" - 11½	1.1/2" - 11½	71.5	52.8	63		

CLP SERIES
BSPT FIXED FEMALE x BSPT FIXED FEMALE

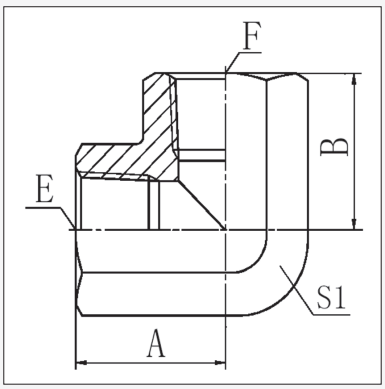

Product Code	Thread		Dimensions mm				
	E (BSPT)	F (BSPT)	A	B	S1		
CLP-02-02	1/8" - 28	1/8" - 28	20	20	16		
CLP-04-04	1/4" - 19	1/4" - 19	22.5	22.5	19		
CLP-06-06	3/8" - 19	3/8" - 19	26	26	24		
CLP-08-08	1/2" - 14	1/2" - 14	31	31	27		
CLP-12-12	3/4" - 14	3/4" - 14	34	34	33		
CLP-16-16	1" - 11	1" - 11	42	42	41		
CLP-20-20	1.1/4" - 11	1.1/4" - 11	48	48	50		
CLP-24-24	1.1/2" - 11	1.1/2" - 11	53	53	60		
CLP-32-32	2" - 11	2" - 11	62	62	70		

CLPN SERIES
NPT FIXED FEMALE x NPT FIXED FEMALE

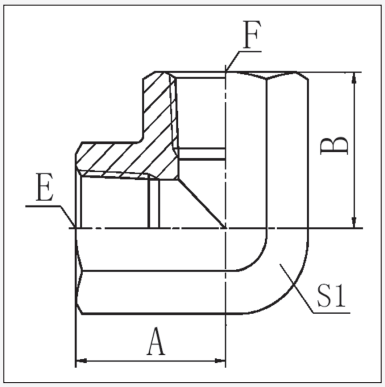

Product Code	Thread		Dimensions mm				
	E (NPT)	F (NPT)	A	B	S1		
CLPN-02-02	1/8" - 28	1/8" - 28	20	20	16		
CLPN-04-04	1/4" - 18	1/4" - 18	22.5	22.5	19		
CLPN-06-06	3/8" - 18	3/8" - 18	26	26	24		
CLPN-08-08	1/2" - 14	1/2" - 14	31	31	27		
CLPN-12-12	3/4" - 14	3/4" - 14	34	34	33		
CLPN-16-16	1" - 11½	1" - 11½	42	42	41		
CLPN-20-20	1.1/4" - 11½	1.1/4" - 11½	48	48	50		

This page is part of a complete catalogue containing technical and safety data.
All data must be reviewed when selecting a product.
Pirtek reserve the right to change technical specifications without notice

90° ELBOWS

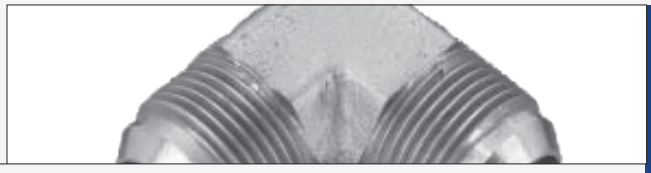

CVA SERIES
BSPT MALE x JIC MALE

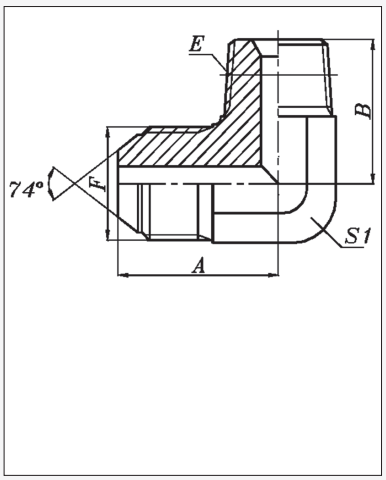

Product Code	Thread		Dimensions mm				
	E (BSPT)	F (JIC)	A	B	S1		
CVA-02-07	1/8" - 28	7/16" - 20	24.5	21	11		
CVA-02-07-029	1/8" - 28	7/16" - 20	24.5	29	11		
CVA-02-07-039	1/8" - 28	7/16" - 20	24.5	39	11		
CVA-02-07-058	1/8" - 28	7/16" - 20	24.5	58	11		
CVA-02-08	1/8" - 28	1/2" - 20	26.6	23.5	14		
CVA-02-09	1/8" - 28	9/16" - 18	26.9	23.5	14		
CVA-04-07	1/4" - 19	7/16" - 20	26.6	25.5	14		
CVA-04-08	1/4" - 19	1/2" - 20	26.6	25.5	14		
CVA-04-09	1/4" - 19	9/16" - 18	26.9	25.5	14		
CVA-04-10	1/4" - 19	5/8" - 18 †					
CVA-04-12	1/4" - 19	3/4" - 16	32	28	19		
CVA-06-07	3/8" - 19	7/16" - 20	27.5	28	16		
CVA-06-08	3/8" - 19	1/2" - 20	27.5	28	16		
CVA-06-09	3/8" - 19	9/16" - 18	28.5	28.5	16		
CVA-06-10	3/8" - 19	5/8" - 18 †					
CVA-06-12	3/8" - 19	3/4" - 16	32	30.5	19		
CVA-06-14	3/8" - 19	7/8" - 14	38	32	22		
CVA-08-07	1/2" - 14	7/16" - 20	31.5	36	22		
CVA-08-09	1/2" - 14	9/16" - 18	32	36	22		
CVA-08-10	1/2" - 14	5/8" - 18 †					
CVA-08-12	1/2" - 14	3/4" - 16	34.8	36	22		
CVA-08-14	1/2" - 14	7/8" - 14	37.8	36	22		
CVA-08-17	1/2" - 14	1.1/16" - 12	44.2	40	27		
CVA-12-09	3/4" - 14	9/16" - 18	35	44	27		
CVA-12-12	3/4" - 14	3/4" - 16	37.9	43.5	27		
CVA-12-14	3/4" - 14	7/8" - 14	41	43.5	27		
CVA-12-17	3/4" - 14	1.1/16" - 12	44.2	43.5	27		
CVA-12-19	3/4" - 14	1.3/16" - 12					
CVA-12-21	3/4" - 14	1.5/16" - 12	49	47.5	33		
CVA-16-12	1" - 11	3/4" - 16	41.5	50	33		
CVA-16-14	1" - 11	7/8" - 14	46	50	33		
CVA-16-17	1" - 11	1.1/16" - 12	47.8	50	33		
CVA-16-21	1" - 11	1.5/16" - 12	49	50	33		
CVA-16-26	1" - 11	1.5/8" - 12	55.5	56.5	41		
CVA-20-21	1.1/4" - 11	1.5/16" - 12	54	56.5	41		
CVA-20-26	1.1/4" - 11	1.5/8" - 12	55.5	56.5	41		
CVA-20-30	1.1/4" - 11	1.7/8" - 12					
CVA-24-30	1.1/2" - 11	1.7/8" - 12	62.5	62.5	48		
CVA-32-40	2" - 11	2.1/2" - 12	75.4	67	63		

90° ELBOWS

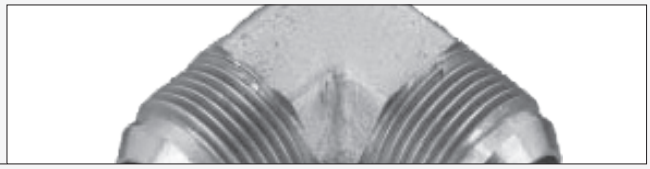

CSA SERIES

UN'O' EXTENDED MALE x JIC MALE

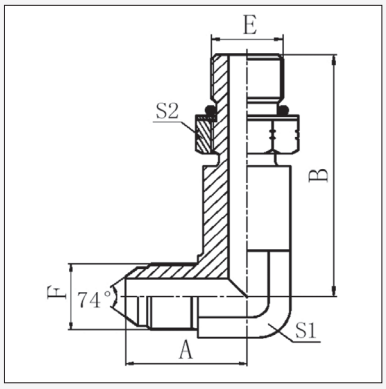

Product Code	Thread		Dimensions mm				
	E (UN'O')	F (JIC)	A	B	S1	S2	
CSA-07-07 †	7/16" - 20	7/16" - 20	24.5	44	11	17	
CSA-09-09	9/16" - 18	9/16" - 18	26.9	52.8	14	19	
CSA-12-12	3/4" - 16	3/4" - 16	33	63.5	19	24	
CSA-14-12	7/8" - 14	3/4" - 16	33	73.4	22	24	
CSA-14-14 †	7/8" - 14	7/8" - 14	37.8	73.4	22	27	
CSA-14-17 †	7/8" - 14	1.1/16" - 12	44.2	73.4	27	27	
CSA-17-17 †	1.1/16" - 12	1.1/16" - 12	44.2	84.8	27	32	
CSA-17-21	1.1/16" - 12	1.5/16" - 12	44	78	33.3	31.7	
CSA-21-21	1.5/16" - 12	1.5/16" - 12	46.5	94.5	33	38	

† Non-Stocked, Available on request

CVAN SERIES

NPT MALE x JIC MALE

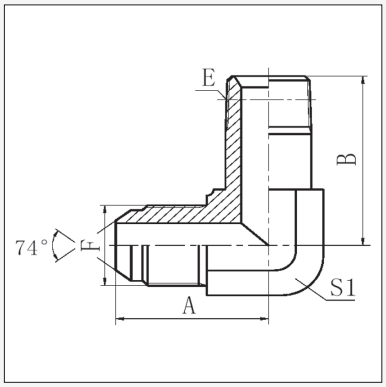

Product Code	Thread		Dimensions mm				
	E (NPT)	F (JIC)	A	B	S1		
CVAN-02-07	1/8" - 27	7/16" - 20	24.5	21	11		
CVAN-02-07-030	1/8" - 27	7/16" - 20	24.5	30	11		
CVAN-02-07-039	1/8" - 27	7/16" - 20	22.5	39.5	11		
CVAN-02-07-058	1/8" - 27	7/16" - 20	22.5	58.0	11		
CVAN-02-08	1/8" - 27	1/2" - 20	26.6	23.5	14		
CVAN-02-09	1/8" - 27	9/16" - 18	26.9	23.5	14		
CVAN-04-07	1/4" - 18	7/16" - 20	26.6	25.5	14		
CVAN-04-07-030	1/4" - 18	7/16" - 20	26.6	30	14		
CVAN-04-07-052	1/4" - 18	7/16" - 20	27	52.5	14		
CVAN-04-08	1/4" - 18	1/2" - 20	26.6	25.5	14		
CVAN-04-09	1/4" - 18	9/16" - 18	26.9	25.5	14		
CVAN-04-09-040	1/4" - 18	9/16" - 18	26.9	40.1	14		
CVAN-04-10	1/4" - 18	5/8" - 18 †	28	26	15		
CVAN-04-12	1/4" - 18	3/4" - 16	32	28.5	19		
CVAN-06-07	3/8" - 18	7/16" - 20	29.5	31	19		
CVAN-06-09	3/8" - 18	9/16" - 18	30	31	19		
CVAN-06-12	3/8" - 18	3/4" - 16	32	31	19		
CVAN-06-12-046	3/8" - 18	3/4" - 16	32	46.2	19		
CVAN-06-14	3/8" - 18	7/8" - 14	37.8	32.5	22		
CVAN-08-07	1/2" - 14	7/16" - 20	33.5	37.3	22		
CVAN-08-09	1/2" - 14	9/16" - 18	32	36.7	22		
CVAN-08-12	1/2" - 14	3/4" - 16	34.8	37.3	22		
CVAN-08-12-055	1/2" - 14	3/4" - 16	34.8	55.1	22		
CVAN-08-14	1/2" - 14	7/8" - 14	37.8	37.3	22		
CVAN-08-17	1/2" - 14	1.1/16" - 12	44.2	40	27		
CVAN-12-12	3/4" - 14	3/4" - 16	37.9	44	27		
CVAN-12-14	3/4" - 14	7/8" - 14	41	44	27		
CVAN-12-17	3/4" - 14	1.1/16" - 12	44.2	44	27		
CVAN-12-21	3/4" - 14	1.5/16" - 12	49	45.2	33		
CVAN-16-17	1" - 11.5	1.1/16" - 12	49	50	33		
CVAN-16-21	1" - 11.5	1.5/16" - 12	49	50	33		
CVAN-20-21	1.1/4" - 11.5	1.5/16" - 12	54	60.5	41		
CVAN-20-26	1.1/4" - 11.5	1.5/8" - 12	55.5	54.5	41		
CVAN-20-30	1.1/4" - 11.5	1.7/8" - 12	62.5	63	48		
CVAN-24-30	1.1/2" - 11.5	1.7/8" - 12	75.4	70	63		
CVAN-32-40	2" - 11.5	2.1/2" - 12	75.4	67.5	63		

PIRTEK

This page is part of a complete catalogue containing technical and safety data.
All data must be reviewed when selecting a product.
Pirtek reserve the right to change technical specifications without notice

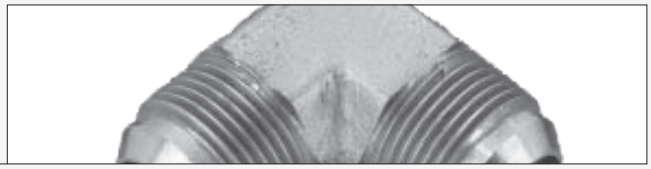

CVD SERIES

BSPT MALE x BSPP FEMALE

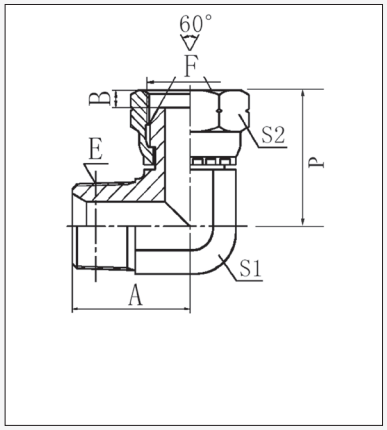

Product Code	Thread		Dimensions mm				
	E (BSPT)	F (BSPP)	A	B	S1	S2	P
CVD-02-02	1/8" - 28	1/8" - 28	21	5.5	11	14	30
CVD-04-04	1/4" - 19	1/4" - 19	25.5	5.5	14	19	33
CVD-06-04	3/8" - 19	1/4" - 19	28.5	5.5	16	19	33
CVD-06-06	3/8" - 19	3/8" - 19	28.5	6.3	16	22	36
CVD-06-08	3/8" - 19	1/2" - 14	30.5	7.5	19	27	36
CVD-08-06	1/2" - 14	3/8" - 19	36	6.3	22	22	42
CVD-08-08	1/2" - 14	1/2" - 14	36	7.5	22	27	42
CVD-08-12	1/2" - 14	3/4" - 14	39.2	10.4	26.6	31.7	42
CVD-12-12	3/4" - 14	3/4" - 14	43.5	10.9	27	32	50
CVD-16-16	1" - 11	1" - 11	50	11.7	33	41	59
CVD-20-20	1.1/4" - 11	1.1/4" - 11	58	11	41	50	62
CVD-24-24	1.1/2" - 11	1.1/2" - 11	62.5	13	48	55	72
CVD-32-32	2"-11	2"-11	70	16	63	70	80

This page is part of a complete catalogue containing technical and safety data.
All data must be reviewed when selecting a product.
Pirtek reserve the right to change technical specifications without notice

90° ELBOWS

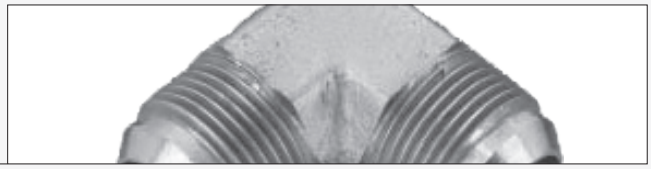

CVDN SERIES
NPT MALE x NPSM FEMALE

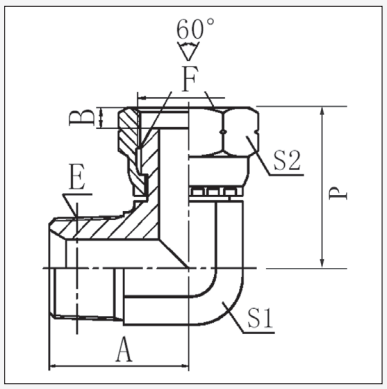

Product Code	Thread		Dimensions mm				
	E (NPT)	F (NPSM)	A	B	S1	S2	P
CVDN-02-02	1/8" - 27	1/8" - 27	21	3.5	11	15	30
CVDN-04-04	1/4" - 18	1/4" - 18	25.5	4.6	14	19	33
CVDN-06-06	3/8" - 18	3/8" - 18	31	6	19	22	36
CVDN-06-08	3/8" - 18	1/2" - 14	31	7.5	19	27	36
CVDN-08-08	1/2" - 14	1/2" - 14	37.3	7.5	22	27	42
CVDN-12-12	3/4" - 14	3/4" - 14	43.5	8.9	27	32	50
CVDN-16-16	1" - 11.5	1" - 11.5	50	10.5	33	41	59
CVDN-20-20	1.1/4" - 11.5	1.1/4" - 11.5	54.5	11.2	41	50	62
CVDN-24-24	1.1/2" - 11.5	1.1/2" - 11.5	59	11.2	48	55	72
CVDN-32-32	2" - 11.5	2" - 11.5	73.5	11.2	63	70	87

CVDP / CVDPA SERIES
BSPP MALE x BSPP FEMALE

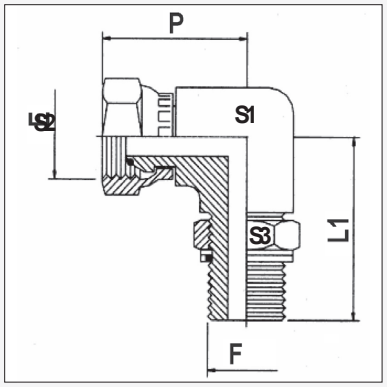

Product Code	Thread		Dimensions mm				
	E (BSPP)	F (BSPP)	L1	P	S1	S2	S3
Non-Adjustable							
CVDP-04-04	1/4" - 28	1/4" - 28	27	28	14	19	-
CVDP-06-06	3/8" - 19	3/8" - 19	28	29	16	22	-
CVDP-08-08	1/2" - 14	1/2" - 14	35	36	22	27	-
CVDP-08-16	1/2"-14	1"-11	41	36.5	-	-	
CVDP-12-16	3/4" - 14	1" - 11	38.5	36.5	30	41	-
CVDP-16-16	1"-11	1"-11	41	36.5	-	-	-
Adjustable Style							
CVDPA-04-04	1/4" - 28	1/4" - 28	31.5	28	14	19	19
CVDPA-06-06	3/8" - 19	3/8" - 19	37	29	16	22	22
CVDPA-08-08	1/2" - 14	1/2" - 14	43	36	22	27	27
CVDPA-12-12	3/4" - 14	3/4" - 14	50	44	27	32	32

PIRTEK

This page is part of a complete catalogue containing technical and safety data.
All data must be reviewed when selecting a product.
Pirtek reserve the right to change technical specifications without notice

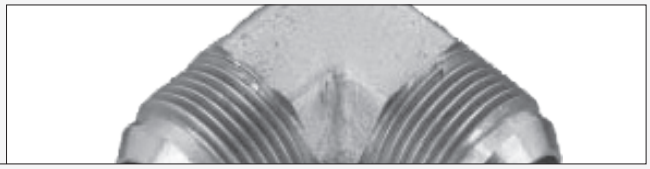

CVF SERIES
BSPT MALE x JIC FEMALE

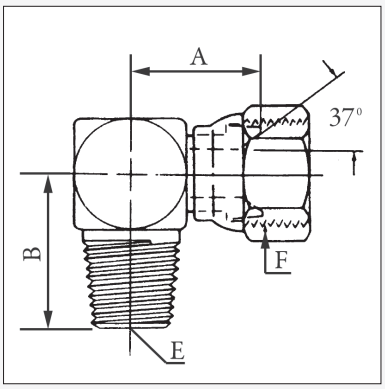

Product Code	Thread		Dimensions mm				
	E (BSPT)	F (JIC)	A	B			
CVF-06-09	3/8" - 19	9/16" - 18	21.6	31			
CVF-12-17	3/4" - 14	1.1/16 -12	28	41			

CVJ SERIES
BSPT MALE x BSPT MALE

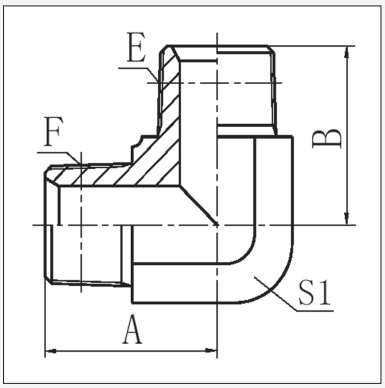

Product Code	Thread		Dimensions mm				
	E (BSPT)	F (BSPT)	A	B	S1		
CVJ-02-02	1/8" - 28	1/8" - 28	21	21	11		
CVJ-04-02	1/4" - 19	1/8" - 28	23.5	25.5	14		
CVJ-04-04	1/4" - 19	1/4" - 19	25.5	25.5	14		
CVJ-06-04	3/8" - 19	1/4" - 19	26.5	28.5	16		
CVJ-06-06	3/8" - 19	3/8" - 19	28.5	28.5	16		
CVJ-08-04	1/2" - 14	1/4" - 19	30.5	36	22		
CVJ-08-06	1/2" - 14	3/8" - 19	32.5	36	22		
CVJ-08-08	1/2" - 14	1/2" - 14	36	36	22		
CVJ-12-08	3/4" - 14	1/2" - 14	39.5	43.5	27		
CVJ-12-12	3/4" - 14	3/4" - 14	43.5	43.5	27		
CVJ-16-12	1" - 11	3/4" - 14	48	50	33		
CVJ-16-16	1" - 11	1" - 11	50	50	33		
CVJ-20-16	1.1/4" - 11	1" - 11	56.5	57.5	41		
CVJ-20-20	1.1/4" - 11	1.1/4" - 11	56.5	56.5	41		
CVJ-24-24	1.1/2" - 11	1.1/2" - 11	62.5	62.5	48		
CVJ-32-32	2" - 11	2" - 11	68	75	63		

CVJN SERIES
NPT MALE x NPT MALE

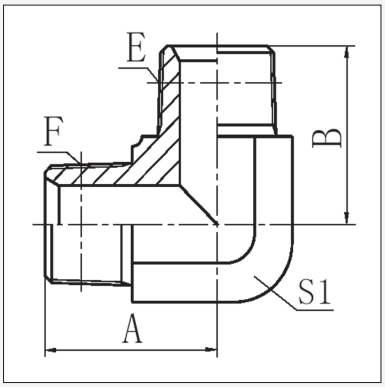

Product Code	Thread		Dimensions mm		
	E (NPT)	F (NPT)	A	B	S1
CVJN-12-12	3/4"-14	3/4"-14	44	44	27
CVJN-16-16	1" - 11½	1" - 11½	50	50	33

PIRTEK

This page is part of a complete catalogue containing technical and safety data.
All data must be reviewed when selecting a product.
Pirtek reserve the right to change technical specifications without notice

90° ELBOWS

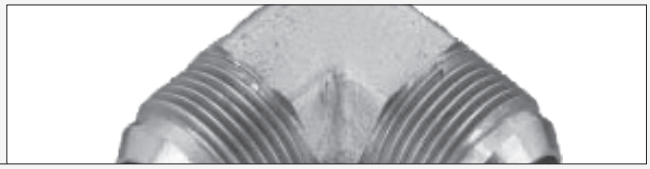

FF1208 SERIES
ORFS MALE x NPTF MALE

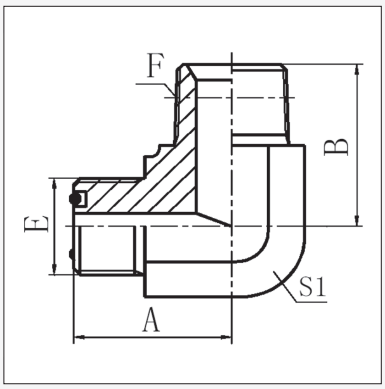

Product Code	Thread		Dimensions mm				
	E (ORFS)	F (NPT)	A	B	S1		
FF1208-0402	9/16" - 18	1/8" - 27	23	24	14		
FF1208-0404	9/16" - 18	1/4" - 18	23	25.5	14		
FF1208-0604	11/16" - 16	1/4" - 18	27	28.5	19		
FF1208-0606	11/16" - 16	3/8" - 18	27.5	31	19		
FF1208-0806	13/16" - 16	3/8" - 18	31	33.5	22		
FF1208-0808	13/16" - 16	1/2" - 14	31	37.3	22		
FF1208-0812	13/16" - 16	3/4" - 14	34.5	44	27		
FF1208-1008	1" - 14	1/2" - 14	36.5	40	27		
FF1208-1012	1" - 14	3/4" - 14	36.5	44	27		
FF1208-1208	1.3/16" - 12	1/2" - 14	41	41.2	30		
FF1208-1212	1.3/16" - 12	3/4" - 14	41	45.5	30		
FF1208-1612	1.7/16" - 12	3/4" - 14	44.5	49	36		
FF1208-1616	1.7/16" - 12	1" - 11.5	44.5	51.5	36		
FF1208-2020	1.11/16" - 12	1.1/4" - 11.5	47.5	54.5	41		
FF1208-2424	2" -12	1.1/2" - 11.5	53.5	61	50		

FF1236 SERIES
ORFS MALE x ORFS FEMALE

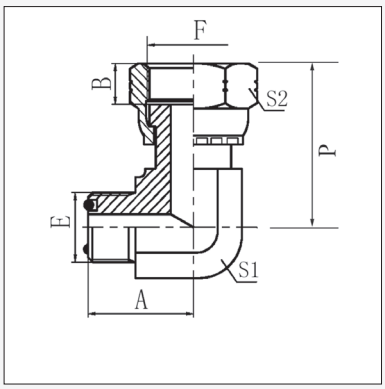

Product Code	Thread		Dimensions mm				
	E (ORFS)	F (ORFS')	A	B	S1	S2	P
FF1236-0404	9/16" - 18	9/16" - 18	23	8.5	14	19	37
FF1236-0606	11/16" - 16	11/16" - 16	27.5	10	19	22	42
FF1236-0808	13/16" - 16	13/16" - 16	31	11	22	27	54
FF1236-1010	1" - 14	1" - 14	36.5	15	27	30	59
FF1236-1212	1.3/16" - 12	1.3/16" - 12	41	15	30	36	66
FF1236-1616	1.7/16" - 12	1.7/16" - 12	48	15	41	41	74
FF1236-2020	1.11/16" - 12	1.11/16" - 12	47.5	15	41	50	79
FF1236-2424	2" -12	2" -12	57	66	55	60	83

This page is part of a complete catalogue containing technical and safety data.
All data must be reviewed when selecting a product.
Pirtek reserve the right to change technical specifications without notice

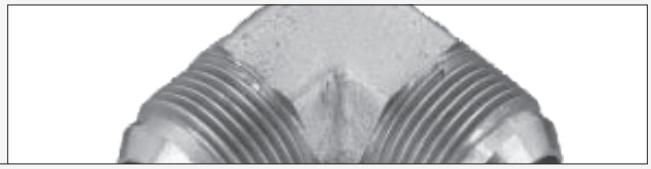

FF1238 SERIES

ORFS MALE x UN'O' MALE

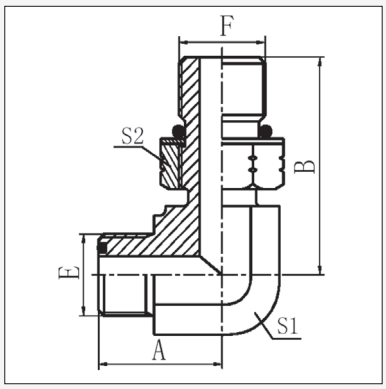

Product Code	Thread		Dimensions mm				
	E (ORFS)	F (UN'O')	A	B	S1	S2	
FF1238-0404	9/16" - 18	7/16" - 20	23	30.3	14	17	
FF1238-0406	9/16" - 18	9/16" - 18	23	32	14	19	
FF1238-0408 †	9/16" - 18	3/4" - 16	25.5	38	19	24	
FF1238-0604	11/16" - 16	7/16" - 20	27.5	33.5	19	17	
FF1238-0606	11/16" - 16	9/16" - 18	27.5	34.5	19	19	
FF1238-0608	11/16" - 16	3/4" - 16	27.5	38	19	24	
FF1238-0806	13/16" - 16	9/16" - 18	31	37	22	19	
FF1238-0808	13/16" - 16	3/4" - 16	31	40.5	22	24	
FF1238-0810	13/16" - 16	7/8" - 14	31	45.3	22	27	
FF1238-0812	13/16" - 16	1.1/16" - 12	34.5	52	27	32	
FF1238-1010	1" - 14	7/8" - 14	36.5	50.8	27	27	
FF1238-1012	1" - 14	1.1/16" - 12	36.5	52	27	32	
FF1238-1210 †	1.3/16" - 12	7/8" - 14	41	52.8	30	27	
FF1238-1212	1.3/16" - 12	1.1/16" - 12	41	54	30	32	
FF1238-1214	1.3/16" - 12	1.3/16" - 12					
FF1238-1216	1.3/16" - 12	1.5/16" - 12	43	55.5	33	41	
FF1238-1612	1.7/16" - 12	1.1/16" - 12	48	60	41	32	
FF1238-1616	1.7/16" - 12	1.5/16" - 12	48	60	41	41	
FF1238-2020	1.11/16" - 12	1.5/8" - 12	47.5	60.5	41	50	
FF1238-2424	2" -12	1.7/8" - 12	53.5	67.5	50	55	

† Available upon request - Non Standard Product

FF1239 SERIES

UN'O' MALE x ORFS FEMALE

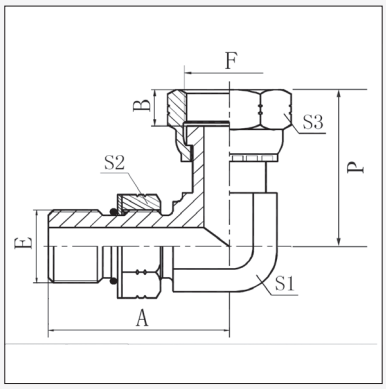

Product Code	Thread		Dimensions mm				
	E (UN'O')	F (ORFS)	A	B	S1	S2	P
FF1239-0404	7/16" - 20	9/16" - 18	30	8.5	14	19	34
FF1239-0606	9/16" - 18	11/16" - 16	34.5	10	16	22	39
FF1239-0808	3/4" - 16	13/16" - 16	37.5	11	19	27	48
FF1239-1010	7/8" - 14	1" - 14	45.2	13.5	22	30	54.5
FF1239-1212	1.1/16" - 12	1.3/16" - 12	52	15	27	36	60.5
FF1239-1616	1.5/16" - 12	1.7/16" - 12	56	15	33	41	68.5
FF1239-2020	1.5/8" - 12	1.11/16" - 12	59	15	41	50	73
FF1239-2424	1.7/8" - 12	2" -12	63	16	48	55	76

90° ELBOWS

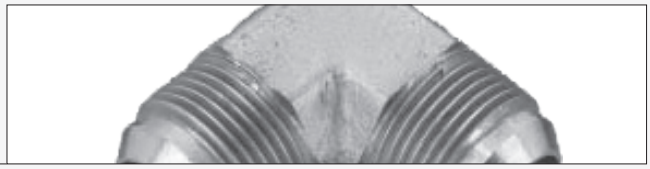

FF1291 SERIES

BSPP MALE x ORFS MALE 90˚ ELBOW

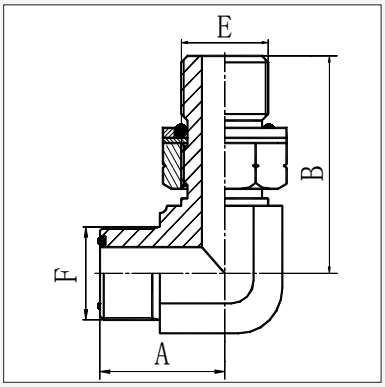

Product Code	Thread		Dimensions mm				
	E (BSPP)	F (ORFS)	A	B			
FF1291-0204	1/8" - 28	9/16" - 18	21.5	30			
FF1291-0404	1/4" - 19	9/16" - 18	23.5	35			
FF1291-0406	1/4" - 19	11/16" - 16	25	36			
FF1291-0408	1/4" - 19	13/16" - 16	28	35			
FF1291-0604	3/8" - 19	9/16" - 18	25	38			
FF1291-0606	3/8" - 19	11/16" - 16	28	38			
FF1291-0608	3/8" - 19	13/16" - 16	28	43			
FF1291-0806	1/2" - 14	11/16" - 16	29.5	43			
FF1291-0808	1/2" - 14	13/16" - 16	31	43			
FF1291-0810	1/2" - 14	1" - 14	33.5	48			
FF1291-0812	1/2" - 14	1.3/16" - 12	37.5	49			
FF1291-1212	3/4" - 14	1.3/16" - 12	37.5	51.5			

CVDJ SERIES

90° JIS BSP MALE X JIS BSP FEMALE

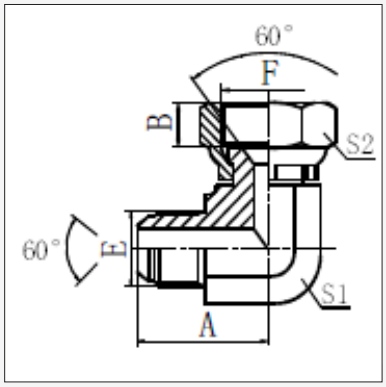

Product Code	Thread		Dimensions mm				
	E (JIS BSP)	F (JIS BSP)	A	B	S1	S2	
CVDJ-06-06	3/8"X19	3/8"X19	31.5	9	16	22	

KAB SERIES

JIS METRIC MALE x JIS METRIC FEMALE

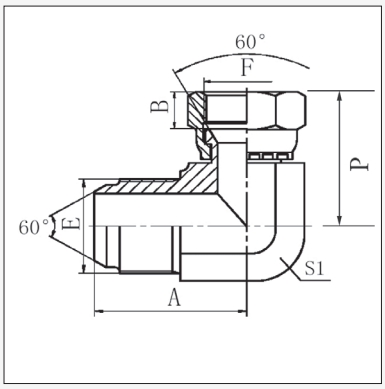

Product Code	Thread		Dimensions mm				
	E (JIS Met.)	F (JIS Met.)	A	B	S1	NUT	P
KAB-14-14	M14 - 1.5	M14 - 1.5	28.5	10.5	14	19	32
KAB-16-16	M16 - 1.5	M16 - 1.5	31.5	10	16	22	35
KAB-18-18	M18 - 1.5	M18 - 1.5	33.8	11.5	19	24	37
KAB-22-22	M22 - 1.5	M22 - 1.5	38	14	22	27	42
KAB-24-24	M24 - 1.5	M24 - 1.5	41.2	15	24	30	44.5
KAB-30-24	M30 - 1.5	M24 - 1.5	47.5	15	30	30	51
KAB-30-30	M30 - 1.5	M30 - 1.5	48	18.3	30	36	54
KAB-33-33	M33 - 1.5	M33 - 1.5	55	21.3	33	41	64

PIRTEK

This page is part of a complete catalogue containing technical and safety data.
All data must be reviewed when selecting a product.
Pirtek reserve the right to change technical specifications without notice

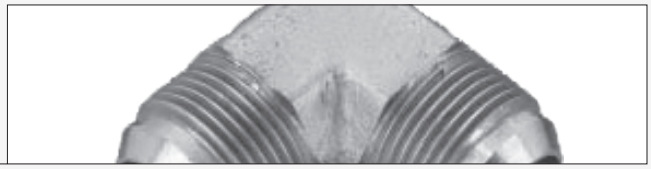

KEA SERIES

JIS METRIC MALE x JIS METRIC O-RING MALE

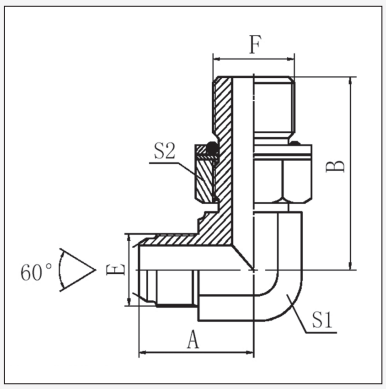

Product Code	Thread		Dimensions mm				
	E (JIS Met.)	F (JIS Met.)	A	B	S1	S2	
KEA-14-12	M14 - 1.5	M12 - 1.5	25.5	31.5	14	17	
KEA-16-14	M16 - 1.5	M14 - 1.5	30.5	34	16	19	
KEA-18-14	M18 - 1.5	M14 - 1.5	30.8	35.5	19	19	
KEA-18-16	M18 - 1.5	M16 - 1.5	33.8	36	19	22	
KEA-18-20	M18 - 1.5	M20 - 1.5	30.8	37	19	27	

This page is part of a complete catalogue containing technical and safety data.
All data must be reviewed when selecting a product.
Pirtek reserve the right to change technical specifications without notice

SECTION 4
45° ELBOWS

			PAGE
CGB	JIC x JIC	M / F_{SW}	**D 49**
CJA	BSPT x JIC	M / M	**D 49**
CJAN	NPT x JIC	M / M	**D 50**
CJD	BSPT x BSPP	M / F_{SW}	**D 50**
CJDN	NPT x NPSM	M / F_{SW}	**D 51**
CJJ	BSPT x BSPT	M / M	**D 51**
CJP	BSPT FEMALE X BSPT FEMALE	F / F	**D 51**
CJPN	NPTF x NPTF FIXED	M / F	**D 52**
CKA	UN`O´ x JIC	M / M	**D 52**
CKB	UN'O' MALE x BSPT MALE	M / M	**D 52**
FF1206	NPT x ORFS	M / M	**D 53**
FF1240	ORFS x UN`O´	M / M	**D 53**
FF1207	ORFS x ORFS	M / F	**D 54**
CJAP	BSPP X JIC	M / M	**D 54**

SECTION 5 TUBE WELD

BG	CODE 61 FLANGE x IMP. TUBE	-	**D 55**
BH	CODE 62 FLANGE x IMP. TUBE	-	**D 55**
BM	BSPT x IMP. TUBE	M / -	**D 56**
BP	BSPP x IMP. TUBE	M / -	**D 56**
BJ	BSPP x IMP. TUBE	F_{SW} / -	**D 57**
BC	JIC x IMP. TUBE	M / -	**D 57**
BD	JIC x IMP. TUBE 90° ELBOW	M / -	**D 58**
BF	JIC x IMP TUBE	F_{SW} / -	**D 58**
FF3020	ORFS x IMP. TUBE Socket Weld	M / -	**D 59**
FF3031	ORFS SHOULDER x IMP. TUBE Int.	F / -	**D 59**
FF3032	ORFS SHOULDER x IMP. TUBE Ext.	F / -	**D 60**
FF3021	ORFS x ORFS x IMP. TUBE	M / M / -	**D 60**

PIRTEK

This page is part of a complete catalogue containing technical and safety data.
All data must be reviewed when selecting a product.
Pirtek reserve the right to change technical specifications without notice

45° ELBOWS

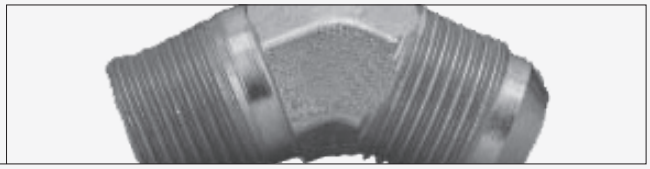

CGB SERIES
JIC MALE x JIC FEMALE

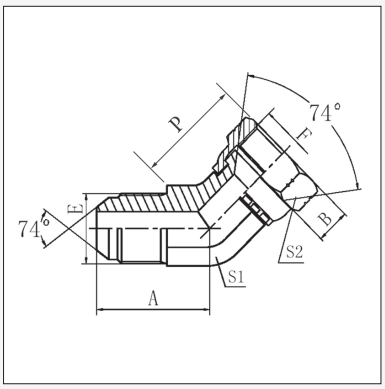

Product Code	Thread		Dimensions mm				
	E (JIC)	F (JIC)	A	B	L	S2	P
CGB-07-07 [a]	7/16" - 20	7/16" - 20	18	9	11	15	24
CGB-08-08	1/2" - 20	1/2" - 20	19.5	9.5	14	17	25.5
CGB-09-09 [a]	9/16" - 18	9/16" - 18	21	10.5	14	19	28.5
CGB-10-10 †	5/8" - 18	5/8" - 18					
CGB-12-12 [a]	3/4" - 16	3/4" - 16	25	11	19	24	32.5
CGB-14-14	7/8" - 14	7/8" - 14	28	13	22	27	36.5
CGB-17-17	1.1/16" - 12	1.1/16" - 12	32.5	15	27	32	38
CGB-21-21 [a]	1.5/16" - 12	1.5/16" - 12	37	16	33	41	44.5
CGB-26-26	1.5/8" - 12	1.5/8" - 12	40.5	17	41	50	51.5
CGB-30-30	1.7/8" - 12	1.7/8" - 12	45	20	48	55	57
CGB-40-40	2.1/2"-12	2.1/2"-12	58	24.5	63	75	

† SAE Thread Form

[a] Also available with Imperial dimensioned hex nut. ***Product Code CGBI***

CJA SERIES
BSPT MALE x JIC MALE

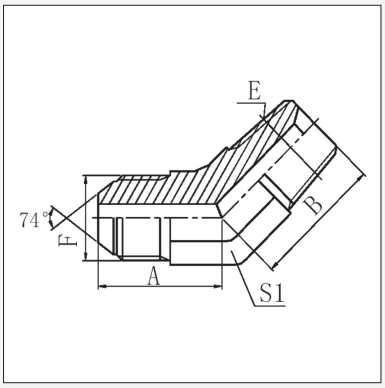

Product Code	Thread		Dimensions mm				
	E (BSPT)	F (JIC)	A	B	S1		
CJA-02-07	1/8" - 28	7/16" - 20	21.5	17	11		
CJA-02-08	1/8" - 28	1/2" - 20	21.5	17.5	14		
CJA-02-09	1/8" - 28	9/16" - 18	22.8	18.2	14		
CJA-04-07	1/4" - 19	7/16" - 20	22.3	21	14		
CJA-04-08	1/4" - 19	1/2" - 20	22.3	21	14		
CJA-04-09	1/4" - 19	9/16" - 18	22.8	21	14		
CJA-04-10	1/4" - 19	5/8" - 18 †	25	21	16		
CJA-04-12	1/4" - 19	3/4" - 16	26.8	22	19		
CJA-06-09	3/8" - 19	9/16" - 18	22	23	16		
CJA-06-10	3/8" - 19	5/8" - 18 †	25	23	16		
CJA-06-12	3/8" - 19	3/4" - 16	26.8	24	19		
CJA-06-14	3/8" - 19	7/8" - 14	31	25	22		
CJA-08-09	1/2" - 14	9/16" - 18	25	29.5	22		
CJA-08-12	1/2" - 14	3/4" - 16	28	29.5	22		
CJA-08-14	1/2" - 14	7/8" - 14	31	29.5	22		
CJA-08-17	1/2" - 14	1.1/16" - 12	35.5	30	27		
CJA-12-12	3/4" - 14	3/4" - 16	29	30.5	27		
CJA-12-14	3/4" - 14	7/8" - 14	32	30.5	27		
CJA-12-17	3/4" - 14	1.1/16" - 12	35.5	30.5	27		
CJA-12-21	3/4" - 14	1.5/16" - 12	38.5	32.5	33		
CJA-16-21	1" - 11	1.5/16" - 12	38.5	38	33		
CJA-20-26	1.1/4" - 11	1.5/8" - 12	43	43	41		
CJA-24-30	1.1/2" - 11	1.7/8" - 12	49	47.5	48		

45° ELBOWS

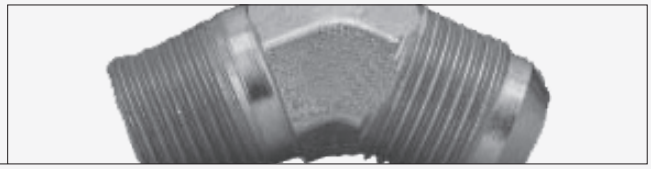

CJAN SERIES
NPT MALE x JIC MALE

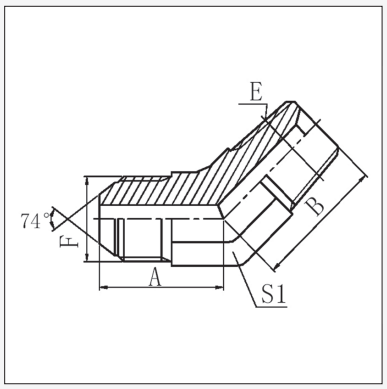

Product Code	Thread		Dimensions mm				
	E (NPT)	F (JIC)	A	B	S1		
CJAN-02-07	1/8" - 27	7/16" - 20	21.5	17	11		
CJAN-02-08	1/8" - 27	1/2" - 20	22.3	18	14		
CJAN-04-07	1/4" - 18	7/16" - 20	22.3	21	14		
CJAN-04-08	1/4" - 18	1/2" - 20	22.3	21	14		
CJAN-04-09	1/4" - 18	9/16" - 18	22.8	21	14		
CJAN-04-10	1/4" - 18	5/8" - 18 †	25	21	16		
CJAN-04-12	1/4" - 18	3/4" - 16	26.8	22	19		
CJAN-06-09	3/8" - 18	9/16" - 18	24	24	19		
CJAN-06-12	3/8" - 18	3/4" - 16	26.8	24	19		
CJAN-06-14	3/8" - 18	7/8" - 14	31	26	22		
CJAN-08-09	1/2" - 14	9/16" - 18	25	29.5	22		
CJAN-08-12	1/2" - 14	3/4" - 16	28	29.5	22		
CJAN-08-14	1/2" - 14	7/8" - 14	31	29.5	22		
CJAN-12-12	3/4" - 14	3/4" - 16	29	35	27		
CJAN-12-14	3/4" - 14	7/8" - 14	32	35	27		
CJAN-12-17	3/4" - 14	1.1/16" - 12	35.5	35	27		
CJAN-16-17	1" - 11.5	1.1/16" - 12					
CJAN-16-21	1" - 11.5	1.5/16" - 12	38.5	39	33		
CJAN-20-26	1.1/4" - 11.5	1.5/8" - 12	43	42	41		
CJAN-24-30	1.1/2" - 11.5	1.7/8" - 12	49	47.5	48		

CJD SERIES
BSPT MALE x BSPP FEMALE

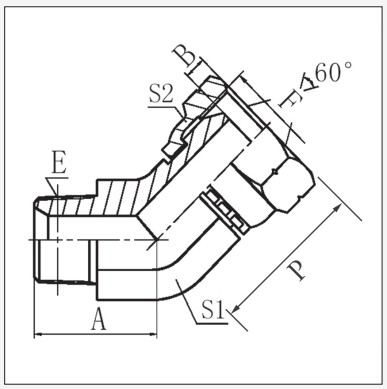

Product Code	Thread		Dimensions mm				
	E (BSPT)	F (BSPP)	A	B	S1	S2	P
CJD-02-02	1/8" - 28	1/8" - 28	17	5.5	11	14	25
CJD-04-04	1/4" - 19	1/4" - 19	21	5.5	14	19	27
CJD-06-06	3/8" - 19	3/8" - 19	23	6.3	16	22	30
CJD-08-08	1/2" - 14	1/2" - 14	29.5	7.5	22	27	33
CJD-12-12	3/4" - 14	3/4" - 14	30.5	10.9	27	32	41
CJD-16-16	1" - 11	1" - 11	38	11.7	33	41	46
CJD-20-20	1.1/4" - 11	1.1/4" - 11	43	11	41	50	48
CJD-24-24	1.1/2" - 11	1.1/2" - 11	47.5	13	48	55	56

This page is part of a complete catalogue containing technical and safety data.
All data must be reviewed when selecting a product.
Pirtek reserve the right to change technical specifications without notice

45° ELBOWS

CJDN SERIES
NPT MALE x NPSM FEMALE

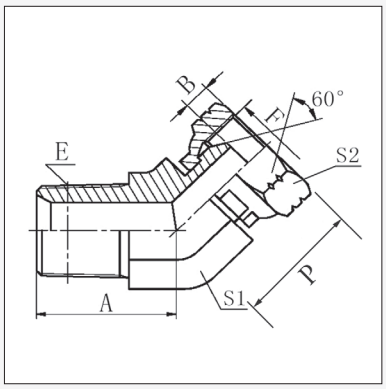

Product Code	Thread		Dimensions mm				
	E (NPT)	F (NPSM)	A	B	S1	S2	P
CJDN-02-02	1/8" - 27	1/8" - 27	17	3.5	11	15	25
CJDN-04-04	1/4" - 18	1/4" - 18	21	4.6	14	19	27
CJDN-06-06	3/8" - 18	3/8" - 18	24	6	19	22	30
CJDN-08-08	1/2" - 14	1/2" - 14	29.5	7.5	22	27	33
CJDN-12-12	3/4" - 14	3/4" - 14	35	8.9	27	32	41
CJDN-16-16	1" - 11.5	1" - 11.5	39	10.5	33	41	46
CJDN-20-20	1.1/4" - 11.5	1.1/4" - 11.5	42.5	11.2	41	50	48
CJDN-24-24	1.1/2" - 11.5	1.1/2" - 11.5	45	11.2	48	55	56
CJDN-32-32	2" - 11.5	2" - 11.5	52.5	11.2	63	70	60

CJJ SERIES
BSPT MALE x BSPT MALE

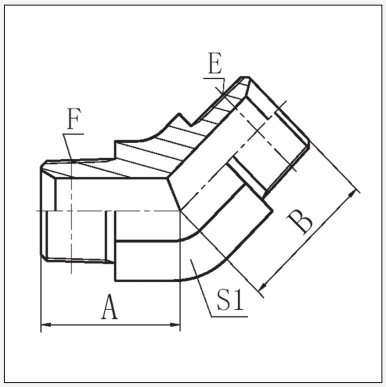

Product Code	Thread		Dimensions mm				
	E (BSPT)	F (BSPT)	A	B	S1		
CJJ-02-02	1/8" - 28	1/8" - 28	17	17	11		
CJJ-04-04	1/4" - 19	1/4" - 19	21	21	14		
CJJ-06-04	3/8" - 19	1/4" - 19	21	23	16		
CJJ-06-06	3/8" - 19	3/8" - 19	23	23	16		
CJJ-08-06	1/2" - 14	3/8" - 19	25	29.5	22		
CJJ-08-08	1/2" - 14	1/2" - 14	29.5	29.5	22		
CJJ-12-08	3/4" - 14	1/2" - 14	30	30.5	27		
CJJ-12-12	3/4" - 14	3/4" - 14	30.5	30.5	27		
CJJ-16-12	1" - 11	3/4" - 14	32.5	38	33		
CJJ-16-16	1" - 11	1" - 11	38	38	33		

CJP SERIES
BSPT FEMALE X BSPT FEMALE

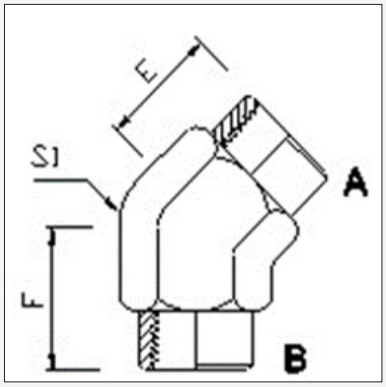

Product Code	Thread		Dimensions mm		
	A (BSPT)	B (BSPT)	E	F	S1
CJP-04-04	1/4"-19	1/4"-19	17.5	17.5	19

45° ELBOWS

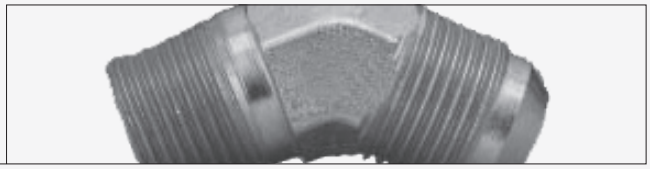

CJPN SERIES

NPT MALE x NPTF FIXED FEMALE

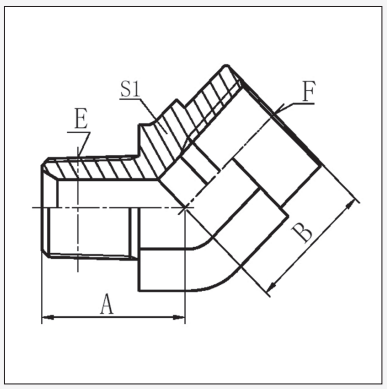

Product Code	Thread		Dimensions mm				
	E (NPT)	F (NPTF)	A	B	S1		
CJPN-02-02	1/8" - 27	1/8" - 27	19	17	16		
CJPN-04-04	1/4" - 18	1/4" - 18	22	20	19		
CJPN-06-06	3/8" - 18	3/8" - 18	27	19	24		
CJPN-08-08	1/2" - 14	1/2" - 14	31.7	28	30		
CJPN-12-12	3/4" - 14	3/4" - 14	36.5	30	33		
CJPN-16-16	1" - 11.5	1" - 11.5	42.5	37.5	41		

CKA SERIES

UN'O' MALE x JIC MALE

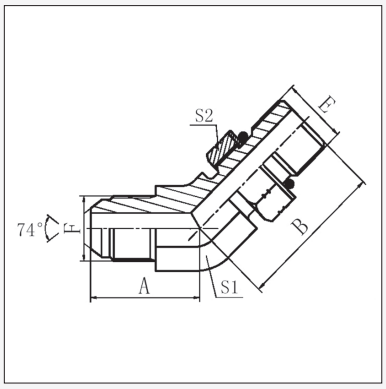

Product Code	Thread		Dimensions mm				
	E (UN'O')	F (JIC)	A	B	S1	S2	
CKA-07-07	7/16" - 20	7/16" - 20	21	24	11	17	
CKA-09-07	9/16" - 18	7/16" - 20	22.3	27.5	14	19	
CKA-09-09	9/16" - 18	9/16" - 18	23.5	28	14	19	
CKA-09-12	9/16" - 18	3/4" - 16	25.8	30	19	19	
CKA-12-09	3/4" - 16	9/16" - 18	25.8	30	19	19	
CKA-12-12	3/4" - 16	3/4" - 16	25.8	32.5	19	24	
CKA-12-14	3/4" - 16	7/8" - 14	29.5	33	22	27	
CKA-14-12	7/8" - 14	3/4" - 16	28	38.7	22	27	
CKA-14-14	7/8" - 14	7/8" - 14	29.5	38.7	22	27	
CKA-14-17	7/8" - 14	1.1/16" - 12	34	42	27	27	
CKA-17-12	1.1/16" - 12	3/4" - 16	30	43.9	27	32	
CKA-17-14	1.1/16" - 12	7/8" - 14	33	43.9	27	32	
CKA-17-17	1.1/16" - 12	1.1/16" - 12	34	43.5	27	32	
CKA-21-17	1.5/16 - 12	1.1/6"- 12	36	47	33	38.1	
CKA-21-21	1.5/16" - 12	1.5/16" - 12	38	45.5	33	41	
CKA-21-26	1.5/16" - 12	1.5/8" - 12	38	46	40	37.7	
CKA-26-26	1.5/8" - 12	1.5/8" - 12	42	48.5	41	50	

CKB SERIES

UN'O' MALE x BSPT MALE

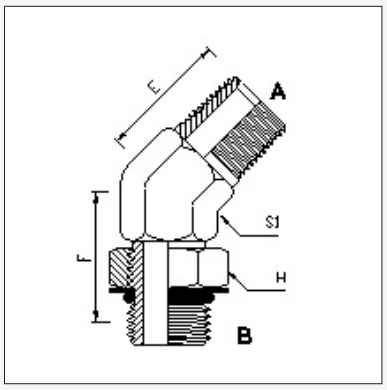

"Product Code"	Thread		Dimensions mm				
	B (UNO)	A (BSPT)	E	F	S1	H	
CKB-12-08	3/4"-16	1/2"-14	30	33	22	24	

PIRTEK

This page is part of a complete catalogue containing technical and safety data.
All data must be reviewed when selecting a product.
Pirtek reserve the right to change technical specifications without notice

FF1206 SERIES
ORFS MALE x NPTF MALE

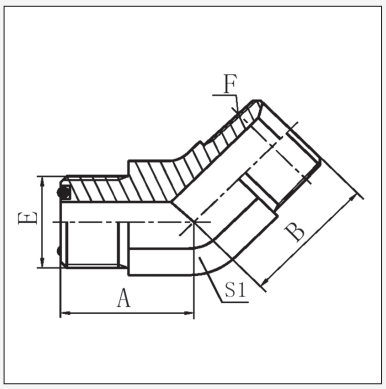

Product Code	Thread		Dimensions mm				
	E (ORFS)	F (NPTF)	A	B	S1		
FF1206-0402	9/16" - 18	1/8" - 27	18.3	18	14		
FF1206-0404	9/16" - 18	1/4" - 18	18.3	21	14		
FF1206-0604	11/16" - 16	1/4" - 18	20.5	22	19		
FF1206-0606	11/16" - 16	3/8" - 18	20.5	24	19		
FF1206-0808	13/16" - 16	1/2" - 14	24	29.5	22		

FF1240 SERIES
ORFS MALE x UN'O' MALE

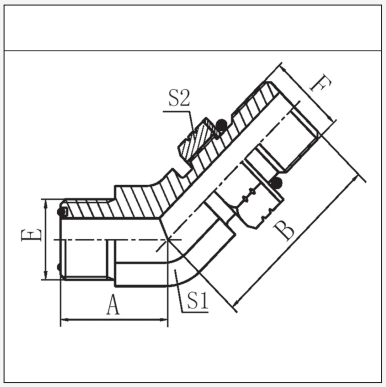

Product Code	Thread		Dimensions mm				
	E (ORFS)	F (UN'O')	A	B	L	S1	
FF1240-0404	9/16" - 18	7/16" - 20	18.3	26	14	17	
FF1240-0406	9/16" - 18	9/16" - 18	18.3	23	14	19	
FF1240-0604	11/16" - 16	7/16" - 20	20.5	27.3	19	17	
FF1240-0606	11/16" - 16	9/16" - 18	20.5	29.5	19	19	
FF1240-0608	11/16" - 16	3/4" - 16	20.5	32.5	19	24	
FF1240-0808	13/16" - 16	3/4" - 16	24	34	22	24	
FF1240-0810	13/16" - 16	7/8" - 14	24	39.5	22	27	
FF1240-1008	1" - 14	3/4" - 16	28	34	27	24	
FF1240-1010	1" - 14	7/8" - 14	28	39.5	27	27	
FF1240-1012	1" - 14	1.1/16" - 12	28	44	27	32	
FF1240-1210	1.3/16" - 12	7/8" - 14	31.5	43.3	33	27	
FF1240-1212	1.3/16" - 12	1.1/16" - 12	31.5	46	33	32	
FF1240-1216	1.3/16" - 12	1.5/16" - 12	32.5	47.9	36	41	
FF1240-1612	1.7/16" - 12	1.1/16" - 12	33	47.9	36	32	
FF1240-1616	1.7/16" - 12	1.5/16" - 12	33	47.9	36	41	
FF1240-1620	1.7/16" - 12	1.5/8" - 12	33	47.9	36	32	
FF1240-2020	1.11/16" - 12	1.5/8" - 12	35.5	50.5	41	50	
FF1240-2424	2" - 12	1.7/8" -12	39	53.5	50	55	

This page is part of a complete catalogue containing technical and safety data.
All data must be reviewed when selecting a product.
Pirtek reserve the right to change technical specifications without notice

45° ELBOWS

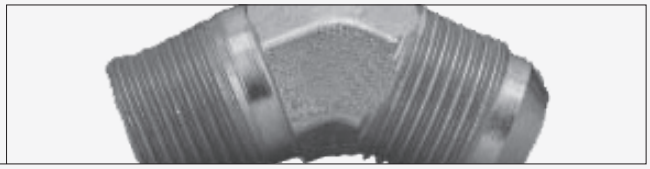

FF1207 SERIES
ORFS MALE X ORFS FEMALE

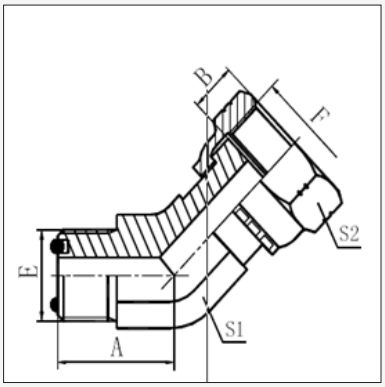

Product Code	Thread		Dimensions mm				
	E (ORFS)	F (ORFS)	E O-Ring	A	B	S1	S2
FF1207-0404	9/16"-18	9/16"-18	O011	20.4	8.2	14	17
FF1207-0606	11/16"-16	11/16"-16	O012	23.9	9	19	22
FF1207-0808	13/16"-16	13/16"-16	O014	24	11	22	27
FF1207-1010	1"-14	1"-14	O016	28	13	27	30
FF1207-1212	1.3/16"-12	1.3/16"-12	0018	26	15	30.2	34.9

CJAP SERIES
BSPP MALE X JIC MALE

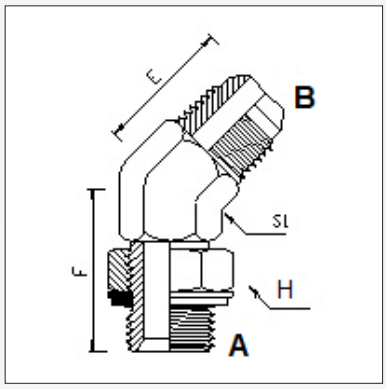

"Product Code"	Thread		Dimensions mm			
	A (BSPP)	B (JIC)	E	F	S1	H
CJAP-04-09	1/4"-19	9/16"-18	22	28	14	19
CJAP-06-09	3/8"-19	9/16"-18	23	32	19	22
CJAP-08-09	1/2"-14	9/16"-18	25	36	22	27

PIRTEK
This page is part of a complete catalogue containing technical and safety data.
All data must be reviewed when selecting a product.
Pirtek reserve the right to change technical specifications without notice

This page is intentionaly blank

TUBE WELD

BM SERIES
BSPT MALE x IMPERIAL TUBE

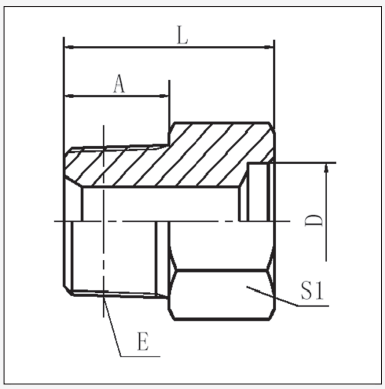

Product Code	BSPT Thread	Tube Recess	Dimensions (mm)				
	ins.	øD mm	A	L	S1		
BM-04-04	1/4" - 19	6.25	14.5	23.5	14		
BM-04-06	1/4" - 19	9.6	14.5	24.5	14		
BM-04-08	1/4" - 19	12.7	14.5	24.5	17		
BM-06-06	3/8" - 19	9.6	15	25	19		
BM-06-08	3/8" - 19	12.7	15	25	19		
BM-08-08	1/2" - 14	12.7	20	32	22		
BM-08-10	1/2" - 14	16.0	20	33	22		
BM-08-12	1/2" - 14	19.0	20	36	24		
BM-12-12	3/4" - 14	19.0	20	36	30		
BM-12-16	3/4" - 14	25.4	20	37	32		
BM-16-16	1" - 11	25.4	25.5	42.5	36		
BM-16-20	1" - 11	31.8	25.5	44.2	38		
BM-20-20	1.1/4" - 11	31.8	26.5	45.5	46		
BM-20-24	1.1/4" - 11	38.1	26.5	47.5	46		
BM-24-24	1.1/2" -11	38.1	26.5	47.5	50		

BP SERIES
BSPP MALE x IMPERIAL TUBE

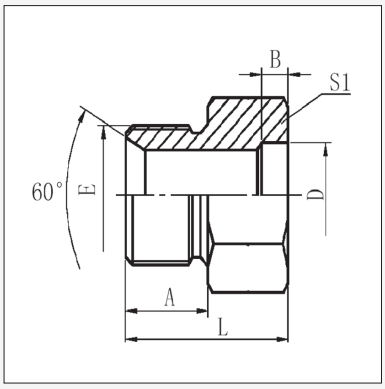

Product Code	BSPP Thread	Tube Recess	Dimensions (mm)				
	ins.	øD mm	A	B	L	S1	
BP-04-06	1/4" - 19	9.6	12	4	22	19	
BP-04-08	1/4" - 19	12.7	12	4	22	19	
BP-06-08	3/8" - 19	12.7	13.5	4	23.5	22	
BP-08-08	1/2" - 14	12.7	16	4	30	27	
BP-08-12	1/2" - 14	19.0	16	5	32	27	
BP-12-12	3/4" - 14	19.0	18.5	5	34.5	32	
BP-12-16	3/4" - 14	25.4	18.5	6	35.5	32	
BP-16-16	1" - 11	25.4	20.5	6	39.5	41	
BP-16-20	1" - 11	31.8	20.5	6	39.5	41	
BP-20-20	1.1/4" - 11	31.8	20.5	6	39.5	50	
BP-20-24	1.1/4" - 11	38.1	20.5	6	41.5	50	
BP-24-24	1.1/2" - 11	38.1	23	6	44	55	

PIRTEK

This page is part of a complete catalogue containing technical and safety data.
All data must be reviewed when selecting a product.
Pirtek reserve the right to change technical specifications without notice

BJ SERIES

BSPP FEMALE x IMPERIAL TUBE

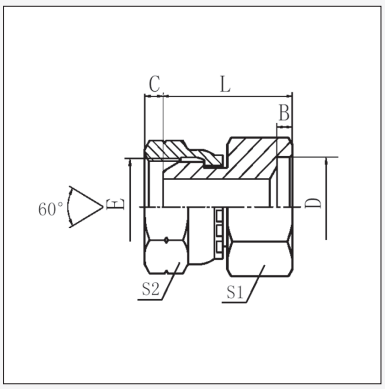

Product Code	Flange Size	Tube Recess	Dimensions (mm)				
	ins.	øD mm	B	C	L	S1	S2
BJ-04-04	1/4" - 19	6.25	3	5.5	20	12	19
BJ-06-06	3/8" - 19	9.6	4	6.3	22	17	22
BJ-08-08	1/2" - 14	12.7	4	7.5	24	19	27
BJ-12-12	3/4" - 14	19.0	5	10.9	31	27	32
BJ-16-16	1" - 11	25.4	6	11.7	33	32	41
BJ-20-20	1.1/4" - 11	31.8	6	11	37.5	41	50
BJ-24-24	1.1/2" -11	38.1	6	13	40	50	55

BC SERIES

JIC MALE x IMPERIAL / METRIC TUBE

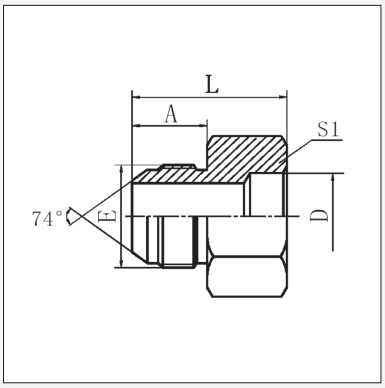

Product Code	JIC Thread Size	Tube Recess	Dimensions (mm)			
	ins.	øD mm	A	L	S1	
TO SUIT IMPERIAL TUBE						
BC-07-04	7/16" - 20	6.25	14	23	14	
BC-09-06	9/16" - 18	9.6	14.1	24	17	
BC-12-08	3/4" - 16	12.7	16.7	29.5	22	
BC-14-10	7/8" - 14	16.0	19.3	32	24	
BC-17-12	1.1/16" - 12	19.0	22	38	30	
BC-17-16	1.1/16" - 12	25.4	22	38	32	
BC-21-16	1.5/16" - 12	25.4	23	40	36	
BC-21-20	1.5/16" - 12	31.8	23.1	40	38	
BC-26-20	1.5/8" - 12	31.8	24.3	43	46	
BC-30-24	1.7/8" - 12	38.1	27.5	48.5	50	
TO SUIT METRIC TUBE						
BC-09-M08	9/16" - 18	8.05	14.1	24	17	
BC-09-M10	9/16" - 18	10.06	14.1	24	17	

This page is part of a complete catalogue containing technical and safety data.
All data must be reviewed when selecting a product.
Pirtek reserve the right to change technical specifications without notice

TUBE WELD

BD SERIES

JIC MALE x IMPERIAL TUBE 90° ELBOW

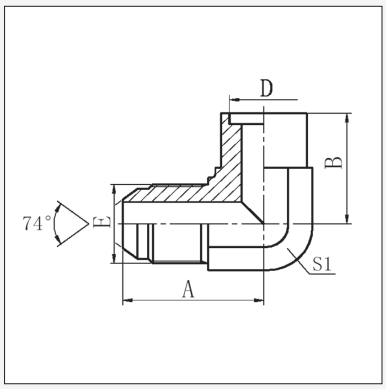

Product Code	JIC Thread	Tube Recess	Dimensions (mm)		
	ins.	øD mm	A	B	S1
BD-09-06	9/16" - 18	9.6	27	9	15.9
BD-12-08	3/4" - 16	12.7	32	10	20.6
BD-14-10 †	7/8" - 14	16.0	37	12	23.8
BD-17-12	1.1/16" - 12	19.1	43	14	28.6
BD-21-16 †	1.5/16" - 12	25.4	46	16	34.9

† Non-stocked, available on request

BF SERIES

JIC FEMALE x IMPERIAL TUBE

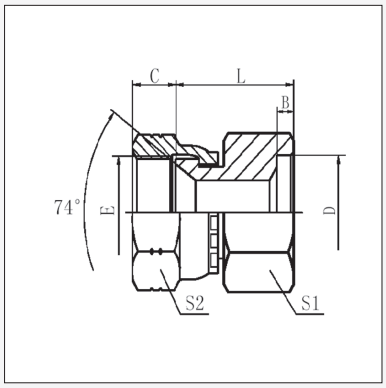

Product Code	JIC Thread	Tube Recess	Dimensions (mm)				
	ins.	øD mm	B	C	L	S1	S2
BF-07-04	7/16" - 20	6.25	3	9	17	12	15
BF-09-06	9/16" - 18	9.6	4	10.5	18.5	14	19
BF-12-08	3/4" - 16	12.7	4	11	20.5	19	24
BF-14-10	7/8" - 14	16.0	5	13	22	22	27
BF-17-12	1.1/16" - 12	19.0	5	15	28.5	27	32
BF-21-16	1.5/16" - 12	25.4	6	16	29.5	32	41
BF-26-20	1.5/8" - 12	31.8	6	17	33	41	50
BF-30-24	1.7/8" - 12	38.1	6	20	35.5	50	55

This page is part of a complete catalogue containing technical and safety data.
All data must be reviewed when selecting a product.
Pirtek reserve the right to change technical specifications without notice

FF3020 SERIES

ORFS MALE x SOCKET WELD

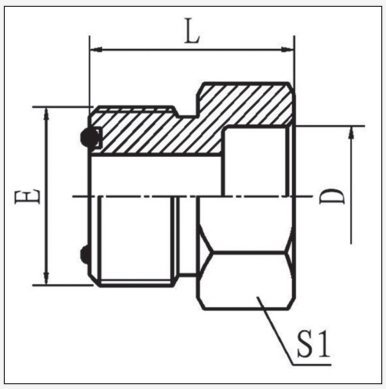

Product Code	Tube Size	Tube Recess	ORFS Thread	ORFS Size	Dimensions (mm)				
	ins.	øD ins	ins	Dash	D	E	L	S1	
FF3020-0404 †	04	1/4"	9/16" - 18	04	6.25	14.22	22	15.9	
FF3020-0606	06	3/8"	11/16" - 16	06	9.6	17.52	23	19	
FF3020-0808	08	1/2"	13/16" - 16	08	12.7	20.82	25	22	
FF3020-1010	10	5/8"	1" - 14	10	16.0	25.4	27	27	
FF3020-1212	12	3/4"	1.3/16" - 12	12	19.0	30.22	34	31.8	
FF3020-1616	16	1"	1.7/16" - 12	16	25.4	36.57	39	38.1	
FF3020-2020 †	20	1.1/4"	1.11/16" - 12	20	31.8	42.92	39	44.5	
FF3020-2424 †	24	1.1/2"	2" - 12	24	38.1	50.8	39	54	

† Non-stocked, available on request

FF3031 SERIES

ORFS SHOULDER x IMPERIAL TUBE INTERNAL BRAZE

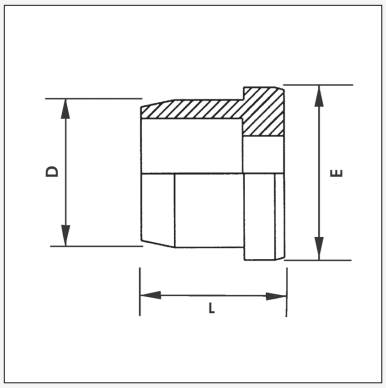

NOTE: Use in conjunction with ORFS Tube Nut FF1311 (see Page D 66)

Product Code	Tube Size	Tube Recess	ORFS Thread	ORFS Size	Dimensions (mm)				
	ins.	øD ins	ins	Dash	E	L			
FF3031-0404	04	6.25	9/16" - 18	04	12.5				
FF3031-0604	06	9.6	9/16" - 18	04	12.5				
FF3031-0606	06	9.6	11/16" - 16	06	15.5				
FF3031-0806	08	12.7	11/16" - 16	06	15.5				
FF3031-0808	08	12.7	13/16" - 16	08	18.6				
FF3031-1008	10	16.0	13/16" - 16	08	18.6				
FF3031-1010	10	16.0	1" - 14	10	23.1				
FF3031-1208	12	19.0	13/16" - 16	08	18.6				
FF3031-1210	12	19.0	1" - 14	10	23.1				
FF3031-1212	12	19.0	1.3/16" - 12	12	27.6				
FF3031-1612	16	25.4	1.3/16" - 12	12	27.6				
FF3031-1614	16	25.4		14					
FF3031-1616	16	25.4	1.7/16" - 12	16	33.9				
FF3031-2016	20	31.8	1.7/16" - 12	16	33.9				
FF3031-2020	20	31.8	1.11/16" - 12	20	40.3				
FF3031-2420	24	38.1	1.11/16" - 12	20	40.3				
FF3031-2424	24	38.1	2" - 12	24	48.2				

TUBE WELD

FF3032 SERIES

ORFS SHOULDER x IMPERIAL TUBE EXTERNAL BRAZE

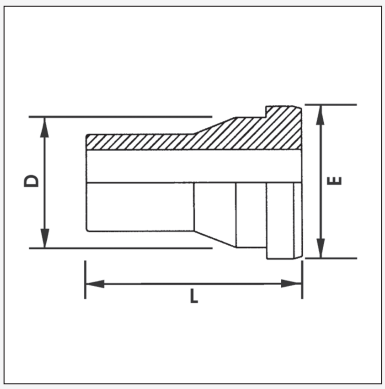

NOTE: Use in conjunction with ORFS Tube Nut FF1311 (see Page D 66)

Product Code	Tube Size	Tube Recess	ORFS	ORFS Size	Dimensions (mm)				
	ins.	øD ins	Thread	Dash	E	L	ins		
FF3032-0404	04	6.25	9/16" - 18	04					
FF3032-0606	06	9.6	11/16" - 16	06					
FF3032-0808	08	12.7	13/16" - 16	08					
FF3032-1010	10	16.0	1" - 14	10					
FF3032-1212	12	19.0	1.3/16" - 12	12					
FF3032-1616	16	25.4	1.7/16" - 12	16					
FF3032-2020	20	31.8	1.11/16" - 12	20					
FF3032-2424	24	38.1	2" - 12	24					

FF3021 SERIES

ORFS x ORFS x BRAZE PORT TEE

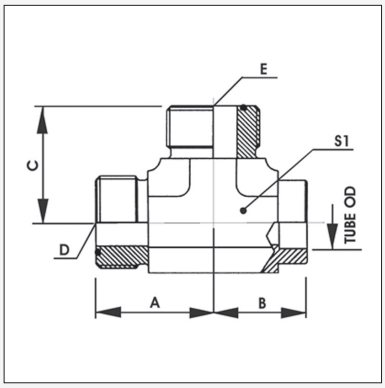

Product Code	Tube Size	Tube Recess	ORFS Thread	ORFS Size	Dimensions (mm)				
	Dash	øD ins	D & E	Dash	A	B	C	S1	
FF3021-0404	04	6.25	9/16" - 18	04					
FF3021-0604	06	9.6	9/16" - 18	04					
FF3021-0606	06	9.6	11/16" - 16	06					
FF3021-0806	08	12.7	11/16" - 16	06					
FF3021-0808	08	12.7	13/16" - 16	08					
FF3021-1008	10	16.0	13/16" - 16	08					
FF3021-1010	10	16.0	1" - 14	10					
FF3021-1208	12	19.0	13/16" - 16	08					
FF3021-1210	12	19.0	1" - 14	10					
FF3021-1212	12	19.0	1.3/16" - 12	12					
FF3021-1612	16	25.4	1.3/16" - 12	12					
FF3021-1614	16	25.4		14					
FF3021-1616	16	25.4	1.7/16" - 12	16					
FF3021-2016	20	31.8	1.7/16" - 12	16					
FF3021-2020	20	31.8	1.11/16" - 12	20					
FF3021-2420	24	38.1	1.11/16" - 12	20					
FF3021-2424	24	38.1	2" - 12	24					

PIRTEK

This page is part of a complete catalogue containing technical and safety data.
All data must be reviewed when selecting a product.
Pirtek reserve the right to change technical specifications without notice

THIS PAGE IS INTENTIONALLY LEFT BLANK

SECTION 6
TUBE FITTINGS

			PAGE
BB / BBI	JIC x JIC REDUCER	F / M	**D 63**
BBJM	BSP BANJO X JIC MALE	M	**D 63**
BAN	JIC FLARED NUT	F	**D 63**
BAS	FLARED IMP. TUBE SLEEVE	-	**D 64**
CAL	JIC SWEPT ELBOW (EXTENDED)	M / F	**D 64**
CAS	JIC SWEPT ELBOW (COMPACT)	M / F	**D 64**
FF1311	ORFS TUBE NUT	F	**D 65**
FF3018	ORFS x ORFS REDUCING INSERT	M / F_{SW}	**D 65**

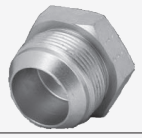

SECTION 7
PLUGS

AP	BSPP	M	**D 66**
AS	BSPT	M	**D 66**
AT / ATH	NPTF (**ATH** WITH HOLLOW HEX)	M	**D 66 / 67**
ASH	BSPT HEX SOCKET PLUG	-	**D 66**
AU / UCAP	JIC	M	**D 67**
AV / AVH	UN`O´ (**AVH** WITH HOLLOW HEX)	M	**D 67 / 68**
FF1254	ORFS	M	**D 68**
JU	JIS BSPP PLUG	-	**D68**
KU	JIS METRIC (KOMATSU®)	M	**D 68**

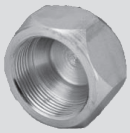

SECTION 8
CAPS

AW / AWI	JIC	F_{SW}	**D 69**
AX	BSPP	F_{SW}	**D 69**
FF1319	ORFS CAP	F_{SW}	**D 69**
KW/JW/UCAP	JIS METRIC / JIS BSPP / RUBBER PLUGS	F_{SW}	**D 70**

PIRTEK

This page is part of a complete catalogue containing technical and safety data.
All data must be reviewed when selecting a product.
Pirtek reserve the right to change technical specifications without notice

BB SERIES

JIC FEMALE x JIC FIXED MALE TUBE REDUCER & *EXPANDERS

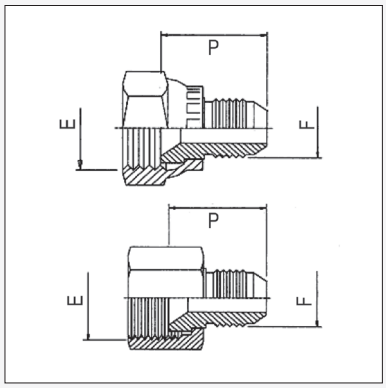

Product Code	JIC Size E		JIC Size F		Dimensions mm	
	Thread	Dash	Thread	Dash	P	Hex
BB-06-07 *	3/8" - 24	06	7/16" - 20	07	18	12.7
BB-07-09	7/16" - 20	07	9/16" - 18	09	23.5	15.9
BB-08-07	1/2"-20	08	7/16" - 20	07	28.5	15.9
BB-09-07	9/16" - 18	09	7/16" - 20	07	24.5	17.5
BB-09-08	9/16" - 18	09	1/2"-20	08	28.5	17.5
BB-12-07	3/4" - 16	12	7/16" - 20	07	25.5	22.2
BB-12-09	3/4" - 16	12	9/16" - 18	09	25.5	22.2
BB-12-14 *	3/4" - 16	12	7/8" - 14	14	29.5	23.8
BB-12-17	3/4" - 16	12	1.1/16" - 12	17	31.7	28.6
BB-14-07	7/8" - 14	14	7/16" - 20	07	26	25.4
BB-14-09	7/8" - 14	14	9/16" - 18	09	26	25.4
BB-14-12	7/8" - 14	14	3/4" - 16	12	29	25.4
BB-14-17	7/8" - 14	14	1.1/16" - 12	17	37.5	28.6
BB-17-07	1.1/16" - 12	17	7/16" - 20	07	27.5	31.8
BB-17-09	1.1/16" - 12	17	9/16" - 18	09	27.5	31.8
BB-17-12	1.1/16" - 12	17	3/4" - 16	12	30.5	31.8
BB-17-14	1.1/16" - 12	17	7/8" - 14	14	31	31.8
BB-17-21	1.1/16" - 12	17	1.5/16" - 12	21	40	34.9
BB-21-09	1.5/16" - 12	21	9/16" - 18	09	29	38.1
BB-21-12	1.5/16" - 12	21	3/4" - 16	12	30	38.1
BB-21-14	1.5/16" - 12	21	7/8" - 14	14	30.5	38.1
BB-21-17	1.5/16" - 12	21	1.1/16" - 12	17	37.5	38.1
BB-21-26	1.5/16" - 12	21	1.5/8" - 12	26	43	42.9
BB-26-17	1.5/8" - 12	26	1.1/16" - 12	17	37.5	50.8
BB-26-21	1.5/8" - 12	26	1.5/16" - 12	21	40	50.8
BB-30-26	1.7/8" - 12	30	1.5/8" - 12	26	43	57.2

* Tube Expander

BBJM SERIES

BSP BANJO X JIC MALE

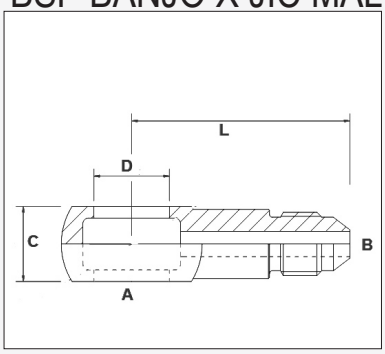

Product Code	A	B	Dimensions (mm)		
	BSPP	JIC	C	D	L
BBJM-04-07	1/4"	7/16" - 20	13	13.1	38
BBJM-04-09	1/4"	9/16" - 18	13	13.1	38.1
BBJM-06-09	3/8"	9/16" - 18	20	16.7	39

PIRTEK

This page is part of a complete catalogue containing technical and safety data.
All data must be reviewed when selecting a product.
Pirtek reserve the right to change technical specifications without notice

TUBE FITTINGS

BAN SERIES
JIC FLARED TUBE NUT

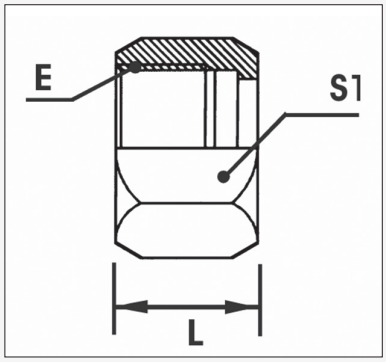

Product Code	Use with Sleeve	JIC Size E		Dimensions (mm)		
		Thread	Dash	L	S1	
BAN-07	BAS-04	7/16" - 20	07	15.5	14	
BAN-08	BAS-05	1/2" - 20	08	17	16	
BAN-09	BAS-06	9/16" - 18	09	18.5	17	
BAN-12	BAS-08	3/4" - 16	12	21.5	22	
BAN-14	BAS-10	7/8" - 14	14	24.5	27	
BAN-17	BAS-12	1.1/16" - 12	17	26	32	
BAN-21	BAS-16	1.5/16" - 12	21	28.5	38	
BAN-26	BAS-20	1.5/8" - 12	26	31	50	
BAN-30	BAS-24	1.7/8" - 12	30	36	57	

BAS SERIES
FLARED SLEEVE FOR IMPERIAL TUBE

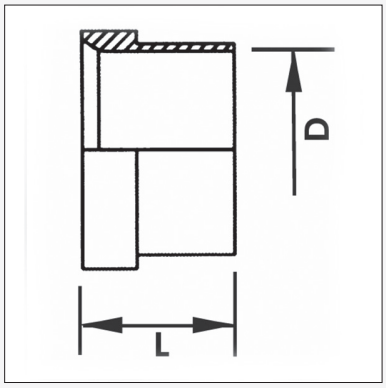

Product Code	Use with Nut	Tube øD		Dimensions (mm)		
		Tube	Dash	L	D	
BAS-04	BAN-07	6.25	04	10.5	6.27	
BAS-05	BAN-08	8.00	05	11.5	8	
BAS-06	BAN-09	9.6	06	12.5	9.55	
BAS-08	BAN-12	12.7	08	14.5	12.75	
BAS-10	BAN-14	16.0	10	16.5	15.9	
BAS-12	BAN-17	19.0	12	17	19.1	
BAS-16	BAN-21	25.4	16	19.5	25.55	
BAS-20	BAN-26	31.8	20	23	31.8	
BAS-24	BAN-30	38.1	24	28.5	38.15	

CAL SERIES
JIC MALE x JIC FEMALE SWEPT ELBOWS (EXTENDED)

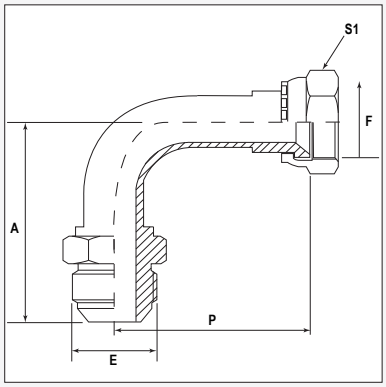

Product Code	Thread		Dimensions mm			
	E (JIC)	F (JIC)	A	S1	P	
CAL-07-07	7/16" - 20	7/16" - 20	39	14.3	45	
CAL-09-09	9/16" - 18	9/16" - 18	42	17.5	55	
CAL-12-12	3/4" - 16	3/4" - 16	54	22.2	62	
CAL-14-14	7/8" - 14	7/8" - 14	63	25.4	65	
CAL-17-17	1.1/16" - 12	1.1/16" - 12	73	32	91	
CAL-21-21	1.5/16" - 12	1.5/16" - 12	86	38	105	
CAL-26-26	1.5/8" - 12	1.5/8" - 12	101	50	127	

This page is part of a complete catalogue containing technical and safety data.
All data must be reviewed when selecting a product.
Pirtek reserve the right to change technical specifications without notice

CAS SERIES

JIC MALE x JIC FEMALE SWEPT ELBOWS (COMPACT)

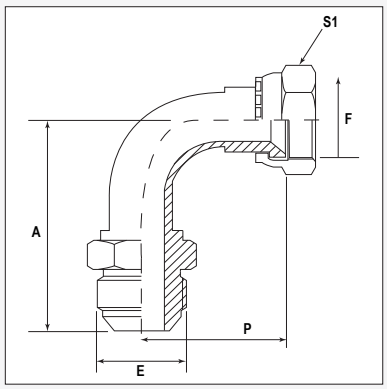

Product Code	Thread		Dimensions mm			
	E (JIC)	F (JIC)	A	S1	P	
CAS-07-07	7/16" - 20	7/16" - 20	39	14.3	29	
CAS-09-09	9/16" - 18	9/16" - 18	42	17.5	39	
CAS-12-12	3/4" - 16	3/4" - 16	54	22.2	44	
CAS-14-14	7/8" - 14	7/8" - 14	63	25.4	50	
CAS-17-17	1.1/16" - 12	1.1/16" - 12	73	32	58	
CAS-21-21	1.5/16" - 12	1.5/16" - 12	86	38	73	
CAS-26-26	1.5/8" - 12	1.5/8" - 12	101	50	85	

FF1311 SERIES

ORFS TUBE NUT

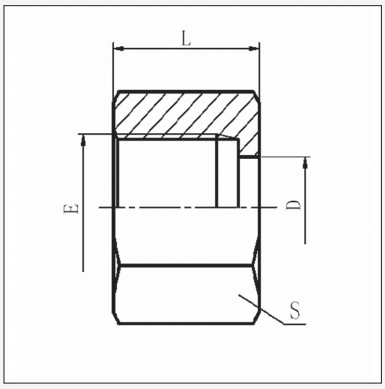

NOTE: Use in conjunction with ORFS Tube Weld insert FF3031, (see Page D 60)

Product Code	ORFS Size E		Dimensions (mm)				
	Thread	Dash	øD	L	S		
FF1311-04	9/16" - 18	04	10.5	14.7	19		
FF1311-06	11/16" - 16	06	13.5	17	22		
FF1311-08	13/16" - 16	08	16.5	21	27		
FF1311-10	1" - 14	10	21	23.5	30		
FF1311-12	1.3/16" - 12	12	24.1	26	36		
FF1311-16	1.7/16" - 12	16	29	27.8	41		
FF1311-20	1.11/16" - 12	20	36	27.8	50		
FF1311-24	2" - 12	24	44	27.8	60		

FF3018 SERIES

ORFS MALE x ORFS FEMALE REDUCING INSERT

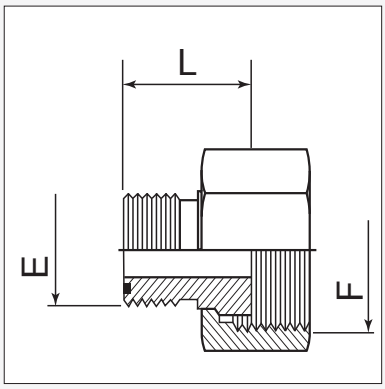

Product Code	ORFS Size E		ORFS Size F		Dimensions (mm)
	Thread	Dash	Thread	Dash	L
FF3018-0410	9/16" - 18	04	1" - 14	10	23
FF3018-0412	9/16" - 18	04	1.3/16" - 12	12	26
FF3018-0810	13/16" - 16	08	1" - 14	10	26
FF3018-0812	13/16" - 16	08	1.3/16" - 12	12	28
FF3018-0816	13/16" - 16	08	1.7/16" - 12	16	29.5
FF3018-1208	1.3/16"-12	12	13/16"-16	08	22

PIRTEK

This page is part of a complete catalogue containing technical and safety data.
All data must be reviewed when selecting a product.
Pirtek reserve the right to change technical specifications without notice

PLUGS

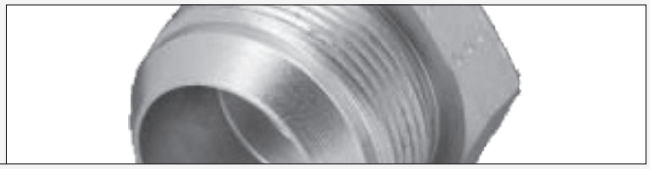

AP SERIES
BSPP MALE PLUG WITH CAPTIVE SEAL

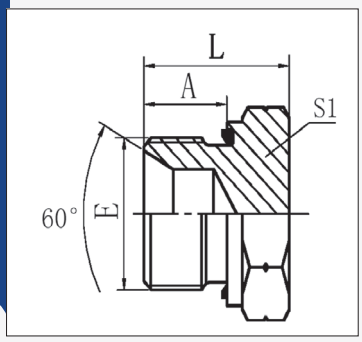

Product Code	BSPP Thread E		Dimensions (mm)		
	Thread	Dash	A	L	S1
AP-02	1/8" - 28	02	8	15.5	14
AP-04	1/4" - 19	04	12	20	19
AP-06	3/8" - 19	06	12	22	22
AP-08	1/2" - 14	08	14	26	27
AP-12	3/4" - 14	12	16	29	32
AP-16	1" - 11	16	18	35	41
AP-20	1.1/4" - 11	20	20	37	50
AP-24	1.1/2" - 11	24	22	39	55
AP-32	2" - 11	32	20	40	75

AS SERIES
BSPT MALE PLUG

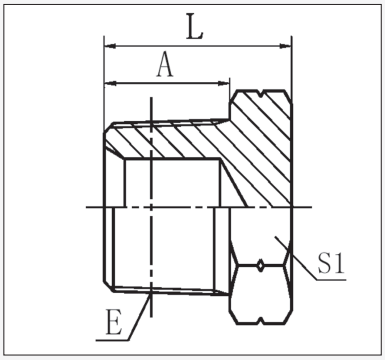

Product Code	BSPT Thread E		Dimensions (mm)		
	Thread	Dash	A	L	S1
AS-02	1/8" - 28	02	10	16	12
AS-04	1/4" - 19	04	14.5	20	17
AS-06	3/8" - 19	06	15	21	19
AS-08	1/2" - 14	08	20	27	22
AS-12	3/4" - 14	12	20	29	30
AS-16	1" - 11	16	25	36.5	36
AS-20	1.1/4" - 11	20	26.5	38.5	46
AS-24	1.1/2" - 11	24	26.5	42	50
AS-32	2" - 11	32	30	46	65

AT SERIES
NPTF MALE PLUG

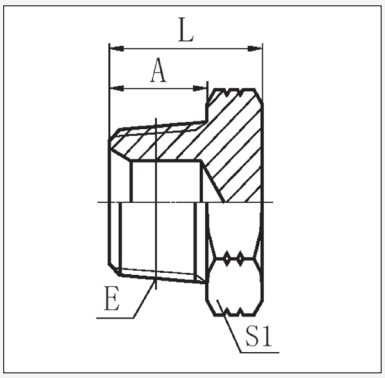

Product Code	NPT Thread E		Dimensions (mm)		
	Thread	Dash	A	L	S1
AT-02	1/8" - 27	02	10.5	16	12
AT-04	1/4" - 18	04	15	20	17
AT-06	3/8" - 18	06	16	21	19
AT-08	1/2" - 14	08	19.5	27	22
AT-12	3/4" - 14	12	19.5	29.5	30
AT-16	1" - 11.5	16	25.5	36.5	36
AT-20	1.1/4" - 11.5	20	26.5	38.5	46
AT-24	1.1/2" - 11.5	24	27.5	43	50
AT-32	2" - 11.5	32	27.5	43.5	65

ASH SERIES
BSPT HEX SOCKET PLUG

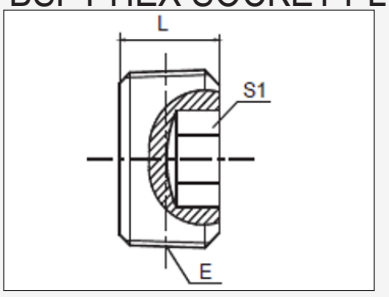

Product Code	Thread	Dimensionsmm	
	E (BSPT)	L	S1
ASH-02	1/8"-28	8	5
ASH-04	1/4"-19	9	6
ASH-06	3/8"-19	10	8
ASH-08	1/2"-14	12	10
ASH-12	3/4"-14	12	12
ASH-16	1"-11	17	17
ASH-20	1.1/4"-11	18	19

PIRTEK

This page is part of a complete catalogue containing technical and safety data.
All data must be reviewed when selecting a product.
Pirtek reserve the right to change technical specifications without notice

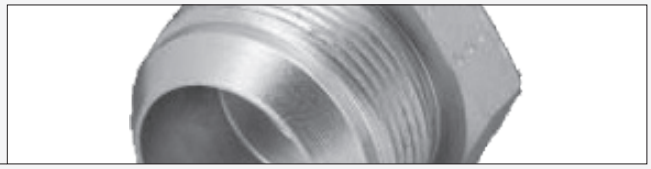

ATH SERIES
NPTF MALE PLUG HOLLOW HEX

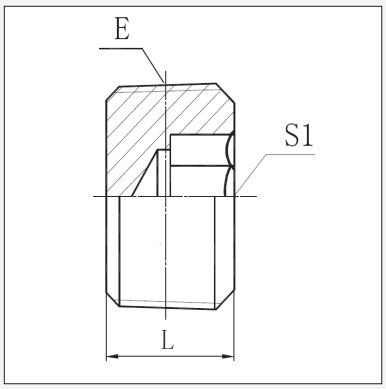

Product Code	NPT Thread E		Dimensions (mm)	
	Thread	Dash	L	S1
ATH-02	1/8" - 27	02	8	5
ATH-04	1/4" - 18	04	10	6
ATH-06	3/8" - 18	06	12	8
ATH-08	1/2" - 14	08	15	10
ATH-12	3/4" - 14	12	16	12
ATH-16	1" - 11.5	16	18	17
ATH-20	1.1/4" - 11.5	20		

AU SERIES (SEE ALSO **UC-P** PAGE 71)
JIC MALE PLUG

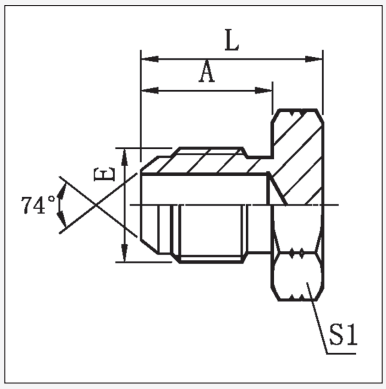

Product Code	JIC Size E		Dimensions (mm)		
	Thread	Dash	A	L	S1
AU-07	7/16" - 20	07	14	20	12
AU-08	1/2" - 20	08	14	20	14
AU-09	9/16" - 18	09	14.1	20	17
AU-10 [a]	5/8" - 18	10			
AU-12	3/4" - 16	12	16.7	25	22
AU-14	7/8" - 14	14	19.3	27.5	24
AU-17	1.1/16" - 12	17	21.9	32	30
AU-19	1.3/16" - 12	19	22.6	33.5	32
AU-21	1.5/16" - 12	21	23.1	34	36
AU-26	1.5/8" - 12	26	24.3	38	46
AU-30	1.7/8" - 12	30	27.5	44.5	50

[a] SAE Thread Form

AV SERIES
UN'O' MALE PLUG

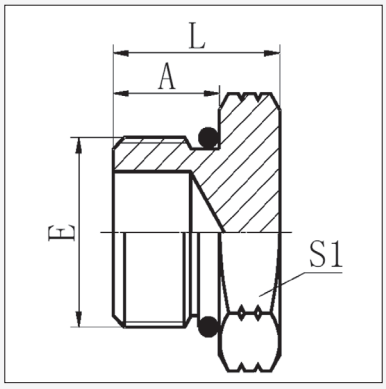

Product Code	UN'O' Size E		Dimensions (mm)		
	Thread	Dash	A	L	S1
AV-06	3/8"-24	06	8	15	14
AV-07	7/16" - 20	07	9.1	16	14
AV-08	1/2" - 20	08	9.1	16	17
AV-09	9/16" - 18	09	9.9	17.5	17
AV-10 [a]	5/8" - 18	10			
AV-12	3/4" - 16	12	11.1	19.5	22
AV-14	7/8" - 14	14	12.7	23	27
AV-17	1.1/16" - 12	17	15.1	26.5	32
AV-19	1.3/16" - 12	19	15.1	27	36
AV-21	1.5/16" - 12	21	15.1	27.5	38
AV-26	1.5/8" - 12	26	15.1	30	50
AV-30	1.7/8" - 12	30	15.1	30	55

[a] SAE Thread Form

PIRTEK

This page is part of a complete catalogue containing technical and safety data.
All data must be reviewed when selecting a product.
Pirtek reserve the right to change technical specifications without notice

PLUGS

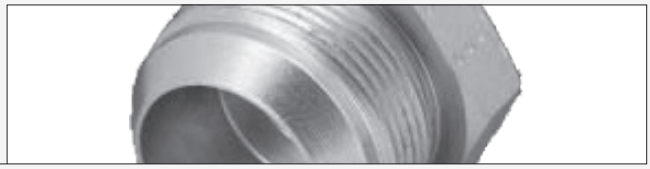

AVH SERIES

UN'O' MALE PLUG HOLLOW HEX

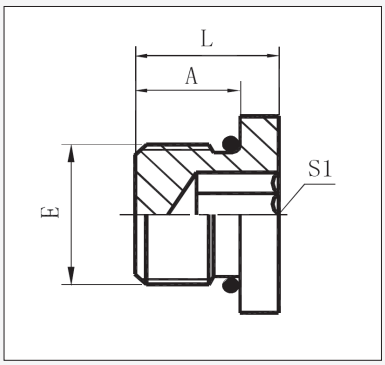

Product Code	UN'O' Size E		Dimensions (mm)		
	Thread	Dash	A	L	S1
AVH-05	5/16" - 24	05	7.5	10	3
AVH-07	7/16" - 20	07	9.1	11.5	5
AVH-08	1/2" - 20	08	9.5	12	5
AVH-09	9/16" - 18	09	9.9	12.2	6
AVH-12	3/4" - 16	12	11.1	14.3	8
AVH-14	7/8" - 14	14	13	17	9.5
AVH-17	1.1/16" - 12	17	15.1	19	14
AVH-21	1.5/16"-12	21	15.1	19	16
AVH-26	1.5/8"-12	26	15.1	19	19
AVH-30	1.7/8"12	30	-	20	19.05

FF1254 SERIES

ORFS MALE PLUG

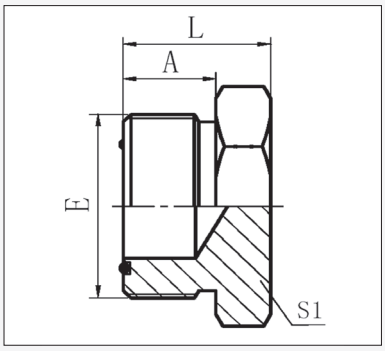

Product Code	ORFS Size E		Dimensions (mm)		
	Thread	Dash	A	L	S1
FF1254-04	9/16" - 18	04	9.8	16.8	17
FF1254-06	11/16" - 16	06	11.2	19.2	19
FF1254-08	13/16" - 16	08	12.8	21.8	22
FF1254-10	1" - 14	10	15.5	25.9	27
FF1254-12	1.316" - 12	12	17	27.4	32
FF1254-16	1.7/16" - 12	16	17.5	27.9	38
FF1254-20	1.11/16" - 12	20	17.5	27.9	46
FF1254-24	2" - 12	24	17.5	27.9	55

JU SERIES

JIS BSPP PLUG

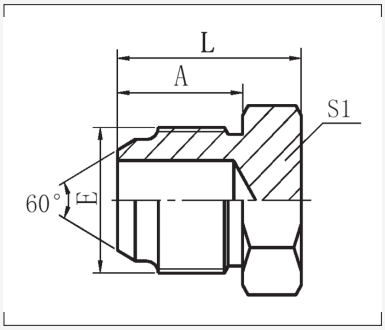

Product Code	BSPP Male 60° Cone Thread E		Dimensions (mm)		
	Thread	Dash	A	L	S1
JU-04	1/4" - 19	04	16	24	17
JU-06	3/8" - 19	06	18	24	19
JU-08	1/2" - 14	08	20	28	22
JU-12	3/4" - 14	12	22	33.5	30
JU-16	1" - 11	16	24	35	36

KU SERIES

JIS METRIC (KOMATSU®) PLUG

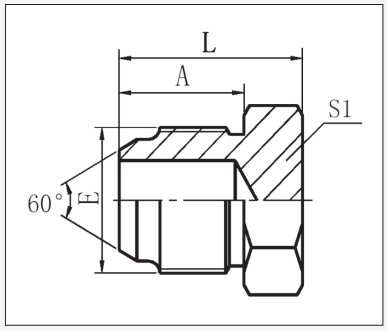

Product Code	JIS Met. Thread E		Dimensions (mm)		
	Thread	Dash	A	L	S1
KU-14	M14 x 1.5	14	17	23	19
KU-16	M16 x 1.5	16	18	24	19
KU-18	M18 x 1.5	18	18	26	22
KU-20	M20 x 1.5	20	20	28	24
KU-22	M22 x 1.5	22	20	30	27
KU-24	M24 x 1.5	24	21.5	32.5	32
KU-30	M30 x 1.5	30	26	37	36
KU-33	M33 x 1.5	33	30	41	41

PIRTEK

This page is part of a complete catalogue containing technical and safety data.
All data must be reviewed when selecting a product.
Pirtek reserve the right to change technical specifications without notice

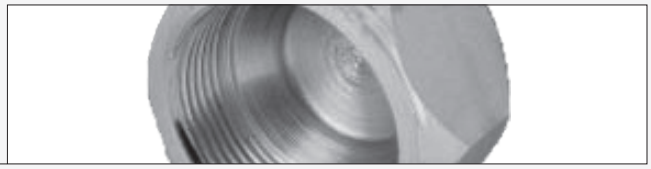

AW / AWI SERIES

JIC FEMALE CAP

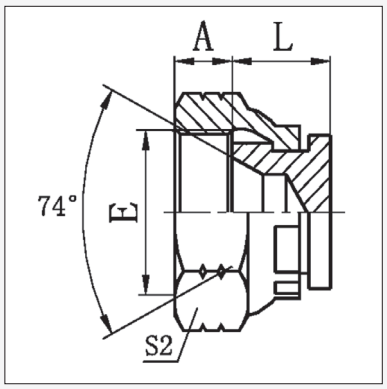

Product Code	JIC Size E		Dimensions (mm)		
	Thread	Dash	A	L	S2
AW-07	7/16" - 20	07	9	10.5	15
AW-08	1/2" - 20	08	9.5	11	17
AW-09	9/16" - 18	09	10.5	11	19
AU-10 [a]	5/8" - 18	10			
AW-12	3/4" - 16	12	11	13	24
AW-14	7/8" - 14	14	13	14	27
AW-17	1.1/16" - 12	17	15	15.5	32
AW-19	1.3/16" - 12	19	15	16	36
AW-21	1.5/16" - 12	21	16	17	41
AW-26	1.5/8" - 12	26	17	19	50
AW-30	1.7/8" - 12	30	20	21	55
IMPERIAL HEX (AWI)					
AWI-07	7/16" - 20	07	9	10.5	5/8"

[a] SAE Thread Form

AX SERIES

BSPP FEMALE CAP

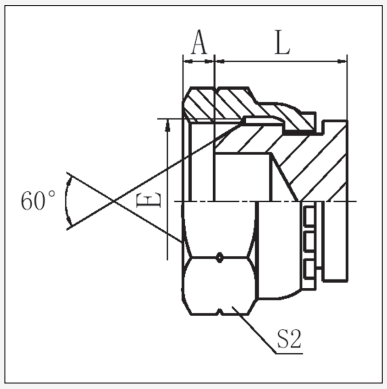

Product Code	BSPP Size E		Dimensions (mm)		
	Thread	Dash	A	L	S2
AX-02	1/8" - 28	02	5.5	12	14
AX-04	1/4" - 19	04	5.5	14	19
AX-06	3/8" - 19	06	6.3	15.5	22
AX-08	1/2" - 14	08	7.5	17.5	27
AX-12	3/4" - 14	12	10.9	18.5	32
AX-16	1" - 11	16	11.7	20	41
AX-20	1.1/4" - 11	20	11	23	50
AX-24	1.1/2" - 11	24	13	25	55
AX-32	2" - 11	32	16	26	70

FF1319 SERIES

ORFS CAP

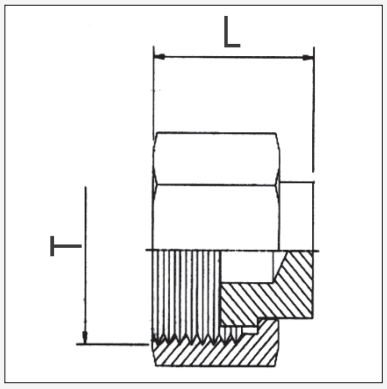

Product Code	ORFS Thread		SuitsTubeSize		Dimensions (mm)	
	Thread T	Dash	mm	ins	L	
FF1319-04	9/16" - 18	04	6	1/4"	16	
FF1319-06	11/16" - 16	06	8-10	5/16"-3/8"	18	
FF1319-08	13/16" - 16	08	12	1/2"	22	
FF1319-10	1" - 14	10	14-16	5/8"	25.5	
FF1319-12	1.3/16" - 12	12	18-20	3/4"	27	
FF1319-16	1.7/16" - 12	16	22-25	7/8"-1"	29	
FF1319-20	1.11/16" - 12	20	28-32	1.1/4"	29	
FF1319-24	2" - 12	24	35-38	1.1/2"	29	

CAPS

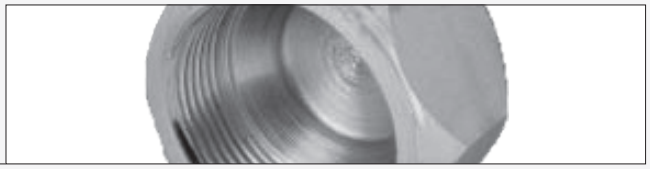

KW SERIES
JIS METRIC (KOMATSU®) CAP

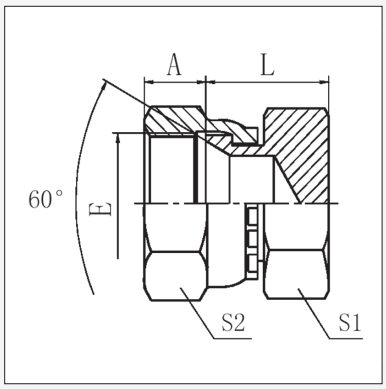

Product Code	JIS Met. Thread E		Dimensions (mm)			
	Thread	Dash	A	L	S1	S2
KW-14	M14 x 1.5	14	10.5	15	19	19
KW-16	M16 x 1.5	16	9.3	17.5	22	22
KW-18	M18 x 1.5	18	11.5	18.5	24	24
KW-20	M20 x 1.5	20				
KW-22	M22 x 1.5	22	14	21	27	27
KW-24	M24 x 1.5	24	15.1	22.5	32	32
KW-30	M30 x 1.5	30	18.3	25	36	36
KW-33	M33 x 1.5	33	21.3	25.5	41	41

JW SERIES
JIS BSPP CAP

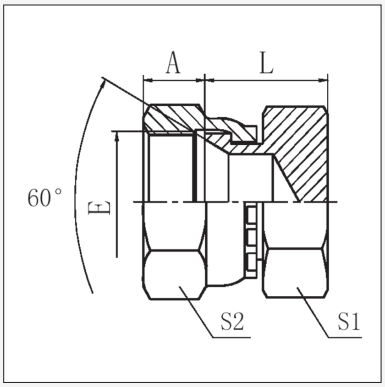

Product Code	BSPP Female 60° Cone Thread E		Dimensions (mm)			
	Thread	Dash	A	L	S1	S2
JW-04	1/4" - 19	04	8	15	17	19
JW-06	3/8" - 19	06	9	16	19	22
JW-08	1/2" - 14	08	12.5	19	22	27
JW-12	3/4" - 14	12	13.5	23.5	32	32
JW-16	1" - 11	16	15.5	25	36	41

UC-P SERIES
NBR RUBBER CAP / PLUG

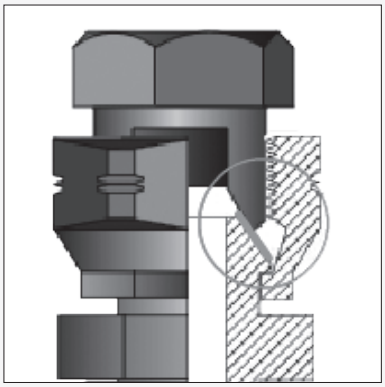

UCAP Product Code	5mm-35mm Size Range		
UC-05P	UC-13P	UC-21P	UC-29P*
UC-06P	UC-14P	UC-22P	UC-30P*
UC-07P	UC-15P	UC-23P	UC-31P*
UC-08P	UC-16P	UC-24P	UC-32P*
UC-09P	UC-17P	UC-25P	UC-33P*
UC-10P	UC-18P	UC-26P*	UC-34P*
UC-11P	UC-19P	UC-27P*	UC-35P*
UC-12P	UC-20P	UC-28P*	* 2 per pack

PackContents5unlessindicatedotherwise

SECTION 9
ADAPTOR UNIONS

AAB / AABI	BSPT x JIC	**M / F_{sw}**	**D 72**
AABN	NPTF x JIC	**M / F_{sw}**	**D 72**
AABP	BSPP x JIC	**M / F_{sw}**	**D 72**
AAM	BSPT x BSPP	**M / F_{sw}**	**D 73**
AAMG / AAMGT	BSP GAUGE ADAPTORS	**M / F_{sw}**	**D 73**
AAMGN	NPT MALE x BSPP FEMALE GAUGE ADAPTOR	**M / F**	**D 74**
AAMGJ	JIC MALE x BSPP FEMALE GAUGE ADAPTOR	**M / F**	**D 74**
AAMN	NPTF x NPSM	**M / F_{sw}**	**D 74**
AAMP	BSPP x BSPP	**M / F_{sw}**	**D 74**
AAP	UN`O´ x BSPP	**M / F_{sw}**	**D 75**
AAU	UN'O' x JIC	**M / F_{sw}**	**D 75**
FF1205	BSPP MALE (ED) X ORFS FEMALE	**M / F**	**D 75**
FF1209	JIC MALE X ORFS FEMALE	**M / F**	**D 76**
FF1214	ORFS MALE X JIC FEMALE	**M / F**	**D 76**
AABS	JIC FEMALE X JIC FEMALE	**F / F**	**D 77**
AAMF	BSPP FEMALE X BSPP FEMALE	**F / F**	**D 77**
AAPJ	JIC MALE X JIC FEMALE	**M / F**	**D 77**

SECTION 10
ADAPTORS FIXED

AA	BSPT x BSPT STUD ADAPTOR	**M / F**	**D 78**
AB	BSPT x JIC	**F / M**	**D 78**
ABH	BSPT FEMALE X JIC MALE BULKHEAD	**F / M**	**D 78**
ABN	NPTF x JIC	**F / M**	**D 78**
AAN	BSPT x NPTF	**M / F**	**D 79**
ANN	NPTF x NPTF	**M / F**	**D 79**
ANU	NPTF x UN'O'	**F / M**	**D 79**
AUU	UN'O' x UN'O'	**F / M**	**D 79**

SECTION 11
REDUCING BUSHES

AQ	BSPT x BSPT STUD ADAPTOR	**M / F**	**D 80**
AR	NPTF x NPTF	**M / F**	**D 80**
RI	BSPP x BSPP STUD (SOFT SEAL)	**M / F**	**D 81**

SECTION 12
SOCKETS

W	BSPT x BSPT	**F / F**	**D 82**
W_U	UNO FEMALE X UNO FEMALE	**F / F**	**D 82**
W (P)	BSPP x BSPP	**F / F**	**D 82**
V / VHD	NPTF x NPTF	**F / F**	**D 83**

ADAPTOR UNIONS

AAB / AABI SERIES

BSPT MALE x JIC FEMALE STRAIGHT UNION

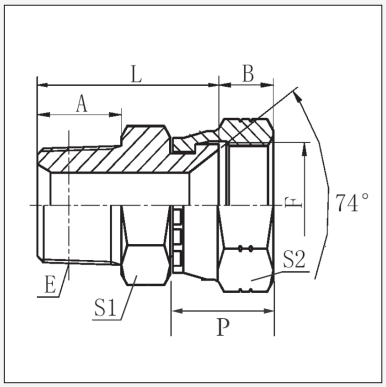

Product Code	Thread		Dimensions mm					
	E (BSPT)	F (JIC)	A	B	L	S1	S2	P
AAB-02-07	1/8" - 28	7/16" - 20	10	9	24	12	17	18.5
AAB-04-09	1/4" - 19	9/16" - 18	14	10.5	28.5	14	19	21.5
AAB-06-09	3/8" - 19	9/16" - 18	15	10.5	29.5	17	19	21.5
AAB-06-12	3/8" - 19	3/4" - 16	15	10.5	31.5	19	24	23
AAB-08-12	1/2" - 14	3/4" - 16	19	10.5	37.5	24	24	23
AAB-08-14	1/2" - 14	7/8" - 14	19	12	38	24	27	26
AAB-08-17	1/2"-14	1.1/16"-12	20.3	15	41.5	30	32	27.5
AAB-12-17	3/4" - 14	1.1/16" - 12	19	15	41.5	30	32	27.5
AAB-16-17	1"-11	1.1/16"-12	24.5	15	47	36	32	27.5
AAB-16-21	1" - 11	1.5/16" - 12	24	16	47.5	36	41	30
AAB-20-26	1.1/4" - 11	1.5/8" - 12	25	17	52	46	50	33
IMPERIAL HEX SIZES (AABI)								
AABI-02-07	1/8" - 28	7/16" - 20	10	9	24	12	5/8"	18.5
AABI-06-09	3/8" - 19	9/16" - 18	15	10.5	29.5	17	3/4"	21.5
AABI-16-21	1" - 11	1.5/16" - 12	24	16	47.5	36	1.5/8"	30

AABN SERIES

NPT MALE x JIC FEMALE STRAIGHT UNION

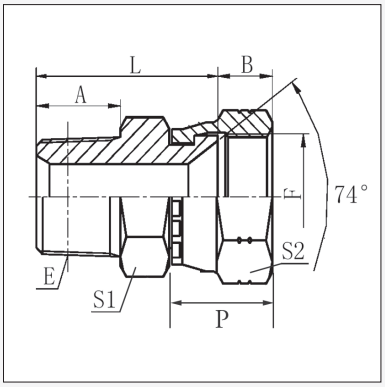

Product Code	Thread		Dimensions mm					
	E (NPT)	F (JIC)	A	B	L	S1	S2	P
AABN-02-07	1/8" - 27	7/16" - 20	10.5	9	24.5	12	17	18.5
AABN-04-07	1/4"-18	7/16"-20	19	9	29	17	17	17.1
AABN-04-09	1/4" - 18	9/16" - 18	15	10.5	29.5	17	19	21.5
AABN-06-12	3/8" - 18	3/4" - 16	16	10.5	32.5	19	24	23
AABN-06-14	3/8" - 18	7/8" - 14	16	13	35.5	22	27	23
AABN-08-12	1/2" - 14	3/4" - 16	19.5	10.5	37.5	22	24	23
AABN-08-14	1/2" - 14	7/8 - 14	19.5	13	38.5	22	27	23
AABN-12-17	3/4" - 14	1.1/16" - 12	19.5	15	42	30	32	27.5
AABN-16-21	1" - 11½	1.5/16" - 12	25.5	16	48	36	41	30
AABN-20-26	1.1/4" - 11½	1.5/8" - 12	26	15.3	41.5	43	51	32
AABN-24-30	1.1/2"-11.5	1.7/8"-12	27.5	23.5	57	50	60	36
AABN-32-40	2" - 11½	2.1/2" - 12						

AABP SERIES

BSPP MALE x JIC FEMALE STRAIGHT UNION

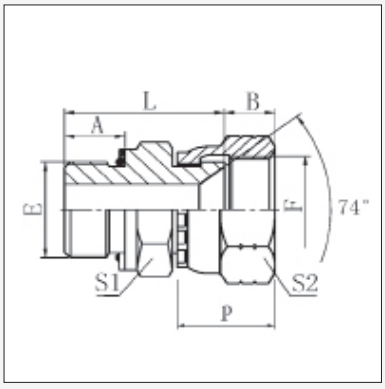

Product Code	Thread		Dimensions mm					
	E (BSPP)	F (JIC)	A	B	L	S1	S2	P
AABP-02-07	1/8" - 28	7/16" - 20	8	9	24	14	14.3	15
AABP-04-07	1/4" - 19	7/16" - 20	10	9	30	19	15	18.5
AABP-04-09	1/4" - 19	9/16" - 18	10	10.5	31.5	19	19	21.5
AABP-06-09	3/8" - 19	9/16" - 18	10	10.5	31.5	22	19	21.5
AABP-06-12	3/8" - 19	3/4" - 16	10	10.5	33	22	24	23
AABP-06-14	3/8" - 19	7/8" - 14	10	12	35	22	27	26
AABP-08-09	1/2"-14	9/16"-18	17	10	36.2	27	17.5	
AABP-08-12	1/2" - 14	3/4" - 16	12	10.5	36.5	27	24	23
AABP-08-14	1/2" - 14	7/8" - 14	12	12	38	27	27	26
AABP-08-17	1/2"-14	1.1/16"-12	17	15	38.5	32	32	
AABP-12-12	3/4"-11	3/4"-16	16	11	39.5	32	22.2	
AABP-12-14	3/4"-11	7/8" - 14	39.6	13	16	32	25.4	24.3
AABP-12-17	3/4" - 14	1.1/16" - 12	14	15	40.5	32	32	27.5
AABP-12-21	3/4" - 14	1.5/16"- 12	16.1	15.1	46.2	37.5	37.7	30
AABP-16-17	1"-11	1.1/16"-12	21	15	44	41	32	
AABP-16-21	1" - 11	1.5/16" - 12	15.5	16	44.5	41	41	30
AABP-20-21	1.14"-11	1.5/16"-12	23	15.2	56.8	50	38	
AABP-20-26	1.1/4"-11	1.5/8"-12	23	15.9	46	50	50	
AABP-20-30	1.1/4"-11	1.7/8"-12	23	16	57.5	55	55	

PIRTEK

This page is part of a complete catalogue containing technical and safety data.
All data must be reviewed when selecting a product.
Pirtek reserve the right to change technical specifications without notice

ADAPTOR UNIONS

AAM SERIES

BSPT MALE x BSPP FEMALE STRAIGHT UNION

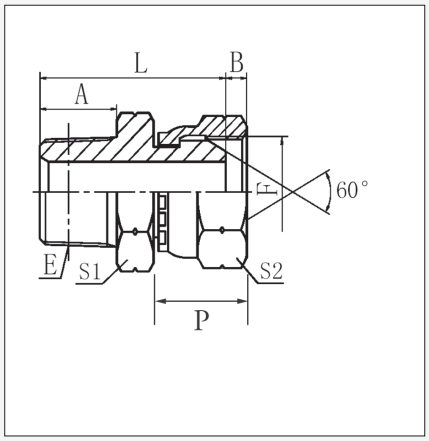

Product Code	Thread		Dimensions mm					
	E (BSPT)	F (BSPP)	A	B	L	S1	S2	P
AAM-02-02	1/8" - 28	1/8" - 28	10	5.5	25	12	14	16
AAM-02-04	1/8" - 28	1/4" - 19	10	5.5	27	12	19	17
AAM-04-02	1/4" - 19	1/8" - 28	14.5	5.5	29.5	17	14	16
AAM-04-04	1/4" - 19	1/4" - 19	14.5	5.5	31.5	17	19	17
AAM-04-06	1/4" - 19	3/8" - 19	15	6	33	19	22	19
AAM-06-04	3/8" - 19	1/4" - 19	15	5.5	32	19	19	17
AAM-06-06	3/8" - 19	3/8" - 19	15	6.3	33	19	22	19
AAM-06-08	3/8" - 19	1/2" - 14	15	7.5	35	19	27	22
AAM-08-06	1/2" - 14	3/8" - 19	20	6.3	40	22	22	19
AAM-08-08	1/2" - 14	1/2" - 14	20	7.5	42	22	27	22
AAM-08-12	1/2" - 14	3/4" - 14	20	10.9	45	27	32	25
AAM-12-08	3/4" - 14	1/2" - 14	20.3	7	45.7	30	27	20.4
AAM-12-12	3/4" - 14	3/4" - 14	20	10.9	45	30	32	25
AAM-12-16	3/4" - 14	1" - 11	20	11.7	46	32	41	32
AAM-16-12	1" - 11	3/4" - 14	20.3	9	49.6	32	38	21.7
AAM-16-16	1" - 11	1" - 11	25.5	11.7	52.5	36	41	32
AAM-16-20	1"-11	1.1/4"-11	27	9	59.6	46	50	33
AAM-20-12	1.1/4" - 11	3/4" - 14	26.5	10.9	54.5	46	32	25
AAM-20-16	1.1/4" - 11	1" - 11	26.5	11.7	55.5	46	41	32
AAM-20-20	1.1/4" - 11	1.1/4" - 11	26.5	11	58	46	50	33
AAM-20-24	1.1/4"-11	1.1/2"-11	26.6	12	61	50	55	33
AAM-24-24	1.1/2"-11	1.1/2"-11	27	12	62.5	50	55	35
AAM-32-32	2"-11	2"-11	30	16	69.1	65	70	40

AAMG / T SERIES

BSP MALE x BSPP FEMALE GAUGE ADAPTOR

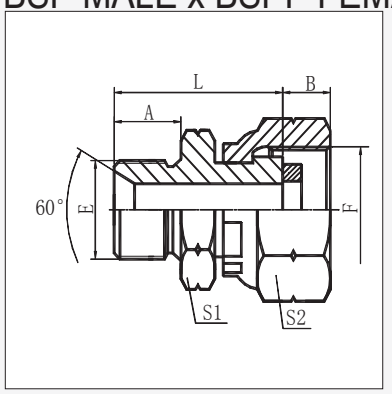

Product Code	Thread		Dimensions mm					
	E (BSPP)	F (BSPP)	A	B	L	S1	S2	O-RINGP/N
AAMG-04-04*	1/4" - 19	1/4" - 19	12	14.5	26.5	19	19	AAMGOR - 04
AAMG-04-08*	1/4" - 19	1/2" - 14	13.9	15.4	33.0	21.7	26.8	AAMGOR - 08
AAMG-06-08*	3/8" - 18	1/2" - 14	11.9	15.5	34.0	21.7	26.8	AAMGOR - 08
AAMG-08-08*	1/2" - 14	1/2" -14	14.0	15.5	38.0	26.7	26.8	AAMGOR - 08
	E (BSPT)	F (BSPP)						
AAMGT-02-04*	1/8" - 27	1/4" - 19	10.2	10.0	25.3	13.7	18.8	AAMGOR - 04
AAMGT-04-04*	1/4" - 19	1/4" - 19	14.9	10.4	32.6	16.8	18.8	AAMGOR - 04
AAMGT-04-08*	1/4" - 19	1/2" - 14	14.7	15.5	32.1	18.8	26.9	
AAMGT-06-08*	3/8" - 19	1/2" - 14	15.0	15.7	33.2	21.7	26.8	AAMGOR - 08

***NOTE:** The above adaptors are supplied with a sealing o-ring mounted internally. Refer to above table for replacement O-Ring part number

****NOTE:** The above adaptors are supplied with a sealing washer mounted internally.
Copper Seal **PGS-04P** is available separately as a spare part for the 1/4" gauge stem if needed..
Dimensions: 9.3mm x 5.4mm x 3.2mm

AAMGN SERIES

NPT MALE x BSPP FEMALE GAUGE ADAPTOR

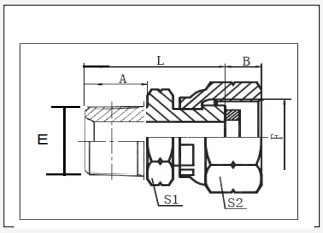

Product Code	Thread		Dimensions mm					
	E (NPT)	F (BSPP)	A	B	L	S1	S2	O-RING P/N
AAMGN-04-04*	1/4" - 18	1/4" - 19	12	14.5	26.5	19	19	AAMGOR - 04

***NOTE:** The above adaptor is supplied with a sealing o-ring mounted internally. Refer to above table for replacement O-Ring part number

ADAPTOR UNIONS

AAMGJ SERIES

JIC MALE x BSPP FEMALE GAUGE ADAPTOR

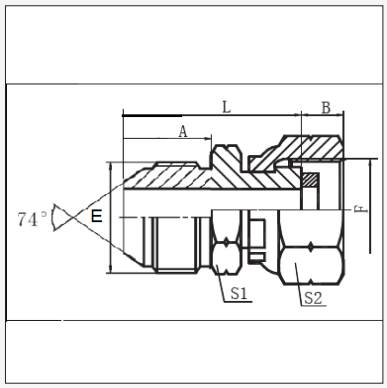

Product Code	Thread		Dimensions mm					
	E (JIC)	F (BSPP)	A	B	L	S1	S2	O-RING P/N
AAMGJ-07-04*	7/16" - 20	1/4" - 19	12	14.5	26.5	19	19	AAMGOR - 04
AAMGJ-09-04*	9/16" - 18	1/4" - 19	14.1	10.3	31.8	16.7	18.8	AAMGOR - 04
AAMGJ-09-08*	9/16" - 18	1/2" - 14	14.1	15.7	33.2	21.8	26.8	AAMGOR - 04

***NOTE:** All the above adaptors are supplied with a sealing o-ring mounted internally. Refer to above table for replacement O-Ring part number

AAMN SERIES

NPTF MALE x NPSM FEMALE STRAIGHT UNION

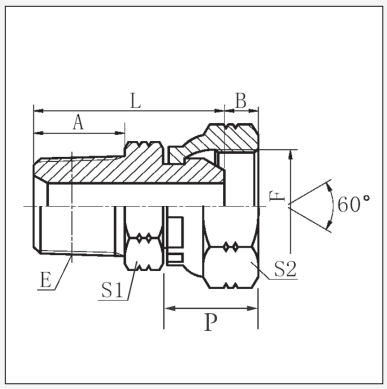

Product Code	Thread		Dimensions mm					
	E (NPT)	F (NPSM)	A	B	L	S1	S2	P
AAMN-02-02	1/8" - 27	1/8" - 27	10.5	3.5	25.5	12	15	16
AAMN-02-04	1/8" - 27	1/4" - 18	10.5	4.6	27	14	19	17
AAMN-04-04	1/4" - 18	1/4" - 18	15	4.6	31	17	19	17
AAMN-04-06	1/4" - 18	3/8" - 18	15	6	32.5	17	22	19
AAMN-06-04	3/8" - 18	1/4" - 18	16	4.6	33	19	19	17
AAMN-06-06	3/8" - 18	3/8" - 18	16	6	33.5	19	22	19
AAMN-06-08	3/8" - 18	1/2" - 14	16	7.5	36	19	27	22
AAMN-08-04	1/2" - 14	1/4" - 18	19.5	46	38.5	22	19	17
AAMN-08-06	1/2" - 14	3/8" - 18	19.5	6	39.5	22	22	19
AAMN-08-08	1/2" - 14	1/2" - 14	19.5	7.5	41	22	27	22
AAMN-08-12	1/2" - 14	3/4" - 14	19.5	8.9	44.5	27	32	25
AAMN-12-12	3/4" - 14	3/4" - 14	19.5	8.9	44.5	30	32	25
AAMN-16-16	1" - 11.5	1" - 11.5	25.5	10.5	52.5	36	41	32
AAMN-20-20	1.1/4" - 11.5	1.1/4" - 11.5	26.5	11.2	60.4	46	50	33
AAMN-24-24	1.1/2" - 11.5	1.1/2" - 11.5	27.5	11.2	62	50	55	37
AAMN-32-32	2" - 11.5	2" - 11.5	27.5	11.2	65.4	65	70	42

AAMP SERIES

BSPP MALE x BSPP FEMALE STRAIGHT UNION

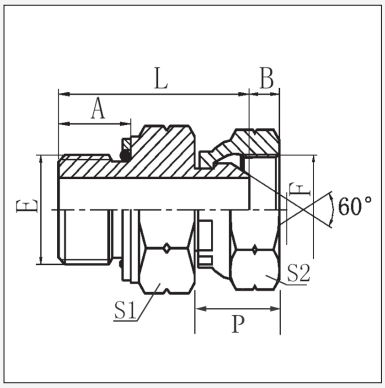

Product Code	Thread		Dimensions mm					
	E (BSPP)	F (BSPP)	A	B	L	S1	S2	P
AAMP-04-04	1/4" - 19	1/4" - 19	10.5	5.5	28.5	19	19	17
AAMP-06-06	3/8" - 19	3/8" - 19	11.5	6.3	32	22	22	19
AAMP-06-08	3/8" - 19	1/2" - 14	11.5	7.5	34	22	27	22
AAMP-08-08	1/2" - 14	1/2" - 14	14	7.5	38	27	27	22
AAMP-08-12	1/2"-14	3/4"-14	16	10.9	41	27	32	-
AAMP-08-16	1/2"-14	1"-11	16	11.7	43.5	32	41	-
AAMP-08-20	1/2"-14	1.1/4"-11	14	10.1	49	41	50	-
AAMP-12-12	3/4" - 14	3/4" - 14	15.5	10.9	41.5	32	32	25
AAMP-12-16	3/4" - 14	1" - 11	10	9	19	38	41	-
AAMP-16-12	1" - 11	3/4" - 14	12	9	21	41	32	-
AAMP-16-16	1" - 11	1" - 11	18	11.7	48	41	41	32
AAMP-20-20	1.1/4" - 11	1.1/4" - 11	20	11	53.5	50	50	33
AAMP-24-24	1.1/2"-11	1.1/2"-11	21.5	13	55.5	60	55	-

This page is part of a complete catalogue containing technical and safety data.
All data must be reviewed when selecting a product.
Pirtek reserve the right to change technical specifications without notice

ADAPTOR UNIONS

AAP SERIES
UN'O' MALE x BSPP FEMALE STRAIGHT UNION

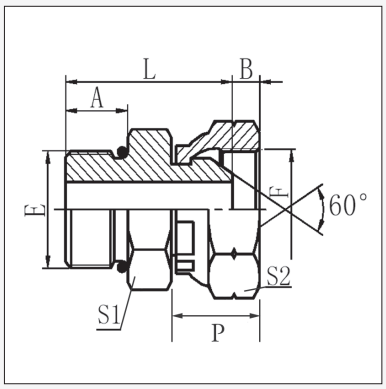

Product Code	Thread		Dimensions mm				
	E (UNO)	F (BSPP)	A	B	S1	S2	P
AAP-09-04	9/16" - 18	1/4" - 19	9.9	5.5	27	17	19
AAP-09-06	9/16" - 18	3/8" - 19	9.9	6.3	28	17	22
AAP-12-06	3/4" - 16	3/8" - 19	11.1	6.3	31	22	22
AAP-12-08	3/4" - 16	1/2" - 14	11.1	7.5	33	22	27
AAP-14-06	7/8" - 14	3/8" - 19	12.7	6.3	35	27	22
AAP-14-08	7/8" - 14	1/2" - 14	12.7	7.5	36.5	27	27
AAP-17-12	1.1/16" - 12	3/4" - 14	15.1	10.9	41	32	32
AAP-21-16	1.5/16" - 12	1" - 11	15.1	11.7	42	38	41

AAU SERIES
UN'O' MALE x JIC FEMALE STRAIGHT UNION

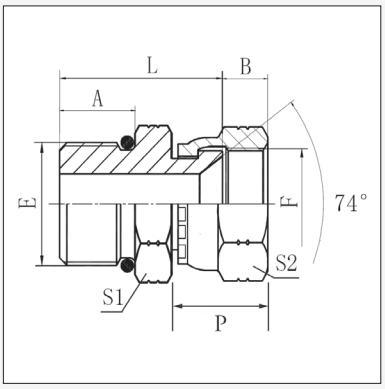

Product Code	Thread		Dimensions mm					
	E (UNO)	F (JIC)	A	B	L	S1	S2	P
AAU-07-07	7/16" - 20	7/16" - 20	9.1	9	23	14	15	18.5
AAU-09-09	9/16" - 18	9/16" - 18	9.9	10.5	24.5	17	19	21.5
AAU-12-12	3/4" - 16	3/4" - 16	11.1	10.5	29.5	22	24	23
AAU-14-14	7/8" - 14	7/8" - 14	12.7	12	34	27	27	
AAU-17-17	1.1/16" - 12	1.1/16" - 12	15.1	15	38.5	32	32	27.5
AAU-21-21	1.5/16" - 12	1.5/16" - 12	15.1	16	38.5	38	41	30

FF1205 SERIES
BSPP MALE (ED) X ORFS FEMALE

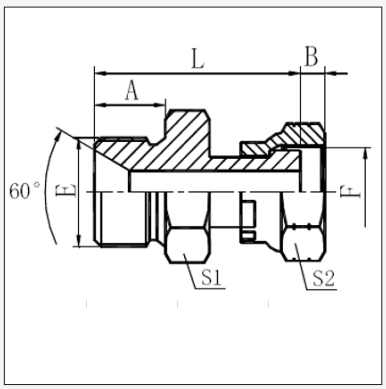

Product Code	Thread		Dimensions mm				
	E (BSPP)	F (ORFS)	A	B	L	S1	S2
FF1205-0404	1/4"-19	9/16"-18	12	8.2	34	19	17
FF1205-0606	3/8"-19	11/16"-16	13.5	9	40	22	22
FF1205-0808	1/2"-14	13/16"-16	16	11	46.5	27	27
FF1205-0810	1/2"-14	1"-14	16	13.5	50.5	27	30
FF1205-1212	3/4"-14	1.3/16"-12	16	17.5	56	32	35
FF1205-1616	1"11	1.7/16"-12	18	17.5	61.7	41	41.3

This page is part of a complete catalogue containing technical and safety data.
All data must be reviewed when selecting a product.
Pirtek reserve the right to change technical specifications without notice

ADAPTOR UNIONS

FF1209 SERIES
JIC MALE X ORFS FEMALE

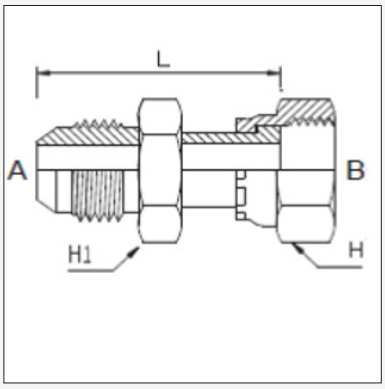

Product Code	Thread		Dimensions mm		
	A (JIC)	B (ORFS)	L	H1	H
FF1209-0704	7/16-20	9/16-18	35.5	14	19
FF1209-0706	7/16-20	11/16-16	32	19.1	20.6
FF1209-0904	9/16-18	9/16-18	35.5	17	17
FF1209-0906	9/16-18	11/16-16	32	19.05	22.23
FF1209-0908	9/16-18	13/16-16	36	22.2	23.8
FF1209-1208	3/4-16	13/16-16	37	22.23	27
FF1209-1410	7/8-14	1-14	44	27	28.58
FF1209-1412	7/8-14	1.3/16-12	47	31.8	34.9
FF1209-1416	7/8-14	1.7/16-12	48	38.1	41.3
FF1209-1712	1.1/16-12	1.3/16-12	49	31.75	34.93
FF1209-2116	1.5/16-12	1.7/16-12	52	38.1	41.28
FF1209-2616	1.5/16-12	1.7/16-12	58	38.1	41.3
FF1209-2620	1.5/8-12	1.11/16-12	58	47.63	47.63

FF1214 SERIES
ORFS MALE X JIC FEMALE

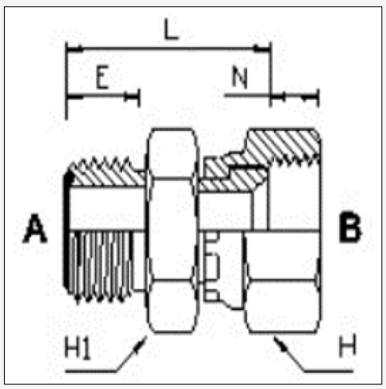

Product Code	Thread		Dimensions mm				
	A (ORFS)	B (JIC)	L	E	N	H1	H
FF1214-0407	9/16-18	7/16-20	25	10	9	14.3	14.3
FF1214-0607	11/16-16	7/16-20	29	11	9	17.5	14.3
FF1214-0609	11/16-16	9/16-18	30	11	10	17.5	17.5
FF1214-0809	13/16-16	9/16-18	33	13	10	22.2	22.2
FF1214-0812	13/16-16	3/4-16	34	13	11	22.2	22.2
FF1214-1014	1-14	7/8-14	40	16	13	25.4	25.4
FF1214-1214	1.3/16-12	7/8-14	44	17	13	31.8	25.4
FF1214-1217	1.3/16-12	1.1/16-12	44	17	14	31.8	31.8
FF1214-1614	1.7/16-12	7/8-14	44	18	13	38.1	25.4
FF1214-1621	1.7/16-12	1.5/16-12	47	18	15	38.1	38.1
FF1214-1626	1.7/16-12	1.5/8-12	51	18	16	50.8	50
FF1214-2026	1.11/16-12	1.5/8-12	51	18	16	50.8	50

FF121M SERIES
ORFS MALE X METRIC MALE (ENCAPSULATED SEAL)

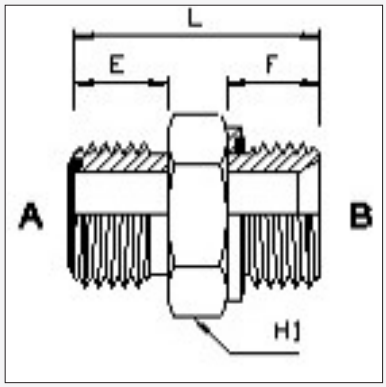

Product code	Thread		Dimensions mm			
	E (ORFS)	F (METRIC)	L	E	F	H1
FF121M-0614	1.1/16" - 16	M14 X 1.5	33	11	12	19

PIRTEK

This page is part of a complete catalogue containing technical and safety data.
All data must be reviewed when selecting a product.
Pirtek reserve the right to change technical specifications without notice

AABS SERIES
JIC FEMALE X JIC FEMALE

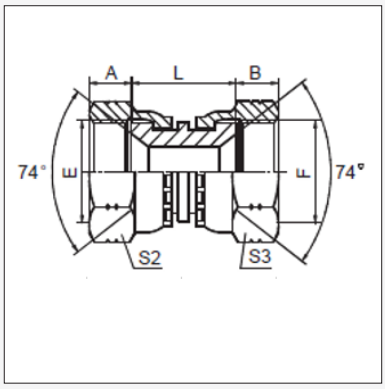

Product Code	Thread		Dimensions mm				
	E (JIC)	F (JIC)	A	B	L	S2	S3
AABS-07-07	7/16"-20	7/16"-20	9	9	19	15	15
AABS-09-09	9/16"-18	9/16"-18	10.5	10.5	21	19	19
AABS-12-12	3/4"-16	3/4"-16	11	11	26	24	24
AABS-14-14	7/8"-14	7/8"-14	13	13	27	27	27
AABS-17-17	1.1/16"-12	1.1/16"-12	15	15	29	32	36
AABS-21-21	1.5/16"-12	1.5/16"-12	16	16	29	41	41

AAMF SERIES
BSPP FEMALE X BSPP FEMALE

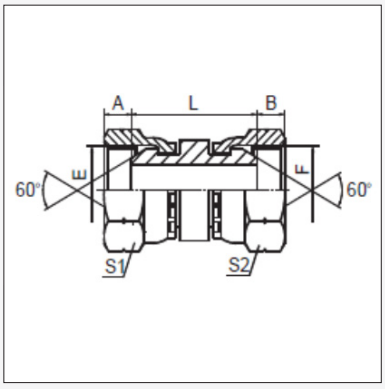

Product Code	Thread		Dimensions mm				
	E (BSPP)	F (BSPP)	A	B	L	S1	S2
AAMF-06-06	3/8"-19	3/8"-19	-	-	28	22	22
AAMF-08-08	1/2"-14	1/2"-14	7.5	7.5	31	27	27
AAMF-16-16	1"-11	1"-11	11.7	11.7	36.5	41	41

AAPJ SERIES
JIC MALE X JIC FEMALE

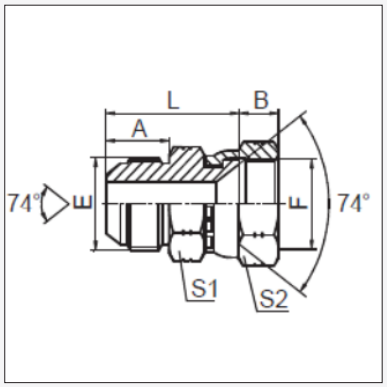

Product Code	Thread		Dimensions mm				
	E (JIC)	F (JIC)	A	B	L	S1	S2
AAPJ-07-07	7/16"-20	7/16"-20	14	9	28	12	15
AAPJ-09-09	9/16"-18	9/16"-18	14.1	10.5	29	17	19
AAPJ-12-12	3/4"-16	3/4"-16	16.7	11	36	22	24
AAPJ-14-14	7/8"-14	7/8"-14	19.3	13	39	24	27
AAPJ-17-17	1.1/16"-12	1.1/16"-12	21.9	15	44.5	30	32
AAPJ-21-21	1.5/16"-12	1.5/16"-12	23	15	49	34.9	38.1

PIRTEK

This page is part of a complete catalogue containing technical and safety data.
All data must be reviewed when selecting a product.
Pirtek reserve the right to change technical specifications without notice

ADAPTORS FIXED

AA SERIES

BSPT MALE x BSPT STUD ADAPTOR

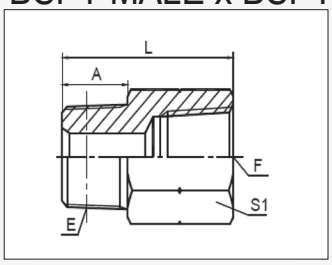

Product Code	BSPT Thread E	BSPT Thread F	Dimensions (mm)		
			A	L	S1
AA-02-02	1/8" - 28	1/8" - 28	11.5	27.5	14
AA-02-04	1/8" - 28	1/4" - 19	10	31	17
AA-04-04	1/4"-19	1/4"-19	14	35	20
AA-04-06	1/4" - 19	3/8" - 19	14	37	22
AA-06-06	3/8"-19	3/8"-19	15	41	25
AA-06-08	3/8" - 19	1/2" - 14	15	43	27
AA-08-08	1/2" - 14	1/2" - 14	19.6	49	27
AA-08-12	1/2" - 14	3/4" - 14	19	50	32
AA-12-16	3/4"-14	1"-11	-	57	41

AB SERIES

BSPT FEMALE x JIC MALE STRAIGHT

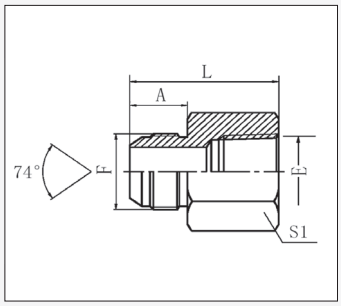

Product Code	Thread		Dimensions mm		
	E (BSPT)	F (JIC)	A	L	S1
AB-02-07	1/8" - 28	7/16" - 20	14	30	14
AB-04-07	1/4" - 19	7/16" - 20	14	35.5	19
AB-04-08	1/4" - 19	1/2" - 20	14	35.5	19
AB-04-09	1/4" - 19	9/16" - 18	14	35.5	19
AB-06-09	3/8" - 19	9/16" - 18	14	36.5	22
AB-06-12	3/8" - 19	3/4" - 16	16.7	39.5	22
AB-08-09	1/2" - 14	9/16" - 18	14	42.5	27
AB-08-12	1/2" - 14	3/4" - 16	16.7	45.5	27
AB-08-14	1/2" - 14	7/8" - 14	19.3	48	27
AB-12-17	3/4" - 14	1.1/16" - 12	22	52.5	36
AB-16-21	1" - 11	1.5/16" - 12	23	59.5	41

ABH SERIES

BSPT FEMALE X JIC MALE BULKHEAD

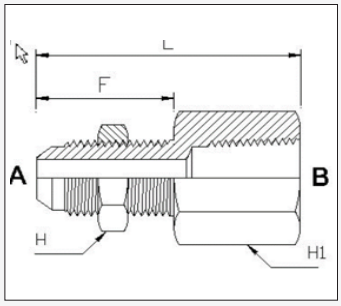

Product Code	Thread		Dimensions mm		
	A (JIC)	B (BSPT)	L	F	H1
ABH-02-07	7/16-20	1/8-28	47	31	14
SSABH-02-07	7/16-20	1/8-28	47	31	14

*SSABH-02-07 stainless steel

ABN SERIES

NPT FEMALE x JIC MALE STRAIGHT

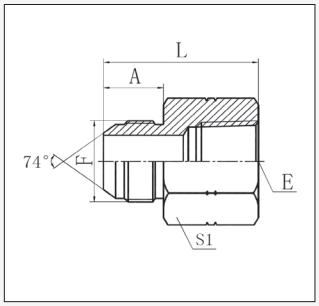

Product Code	Thread		Dimensions mm		
	E (NPT)	F (JIC)	A	L	S1
ABN-02-07	1/8" - 28	7/16" - 20	14	30.2	14
ABN-04-07	1/4" - 19	7/16" - 20	14	35.3	19
ABN-04-09	1/4" - 19	9/16" - 18	14.1	35.6	19
ABN-06-09	3/8" - 19	9/16" - 18	14.1	37.1	22
ABN-06-12	3/8" - 19	3/4" - 16	16.7	39.6	22
ABN-08-09	1/2" - 14	9/16" - 18	14.5	43	26
ABN-08-12	1/2" - 14	3/4" - 16	16.7	45.6	30
ABN-08-14	1/2" - 14	7/8" - 14	19.5	48	29
ABN-12-17	3/4" - 14	1.1/16" - 12	21.9	52.3	36
ABN-16-21	1" - 11	1.5/16" - 12	23.1	59.7	41

PIRTEK
This page is part of a complete catalogue containing technical and safety data.
All data must be reviewed when selecting a product.
Pirtek reserve the right to change technical specifications without notice

AAN SERIES

BSPT MALE X NPT FEMALE

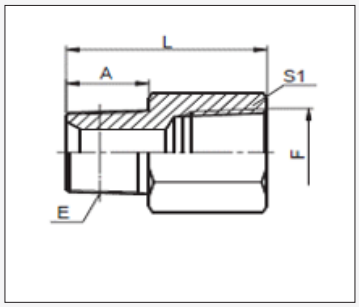

Product Code	Thread		Dimensions mm		
	E(BSPT)	F(NPT)	A	L	S1
AAN-02-02	1/8"X28	1/8"X27	10	25	17

ANN SERIES

NPT MALE x NPT FEMALE REDUCER

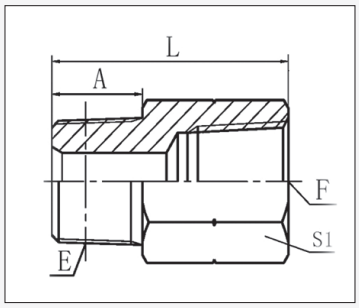

Product Code	NPT Thread E	NPT Thread F	Dimensions (mm)		
			A	L	S1
ANN-02-02	1/8" - 27	1/8" - 27	10.5	25.5	17
ANN-02-04	1/8" - 27	1/4" - 18	10.5	31	19
ANN-04-04	1/4" - 18	1/4" - 18	15	35.3	19
ANN-08-12	1/2"-14	3/4"-14	19.5	49	36

ANU SERIES

NPT FEMALE x UN'O' MALE STRAIGHT

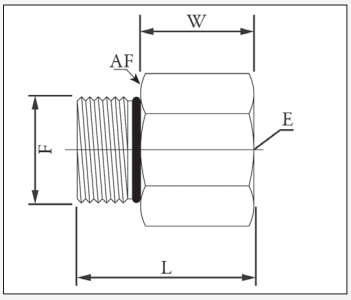

Product Code	Thread		Dimensions mm		
	E (NPT)	F (UNO)	W	L	AF
ANU-04-09	1/4" - 18	9/16" - 18	22.6	29.2	19.1
ANU-08-14	1/2" - 14	7/8" - 14	23.4	39.3	28.6
ANU-08-17	1/2" - 14	1.1/16" -12	23.4	38	31.8
ANU-12-14	3/4" - 19	7/8" - 14	25.7	42.2	34.9

AUU SERIES

UN'O' FEMALE x UN'O' MALE STRAIGHT UNION

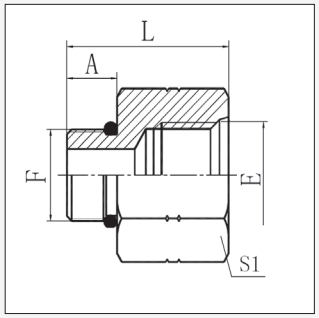

Product Code	Thread		Dimensions mm		
	E (UNO)	F (UNO)	A	L	S1
AUU-07-09	7/16" - 20	9/16" - 18	11.13	28	17.5
AUU-07-12	7/16" - 20	3/4" - 16	11.13	19.5	22
AUU-09-07	9/16" - 18	7/16" - 20	9.14	31	22
AUU-09-12	9/16" - 18	3/4" - 16	11.13	31.5	22
AUU-09-14	9/16" - 18	7/8" - 14	12.7	20.6	27
AUU-12-17	3/4" - 16	1.1/16" - 12	15.09	26	32
AUU-17-26	1.1/16"-12	1.5/8"-12	-	26	47.6
AUU-21-26	1.5/16" - 12	1.5/8" - 12	15.1	40	50

PIRTEK

This page is part of a complete catalogue containing technical and safety data.
All data must be reviewed when selecting a product.
Pirtek reserve the right to change technical specifications without notice

REDUCING BUSHES

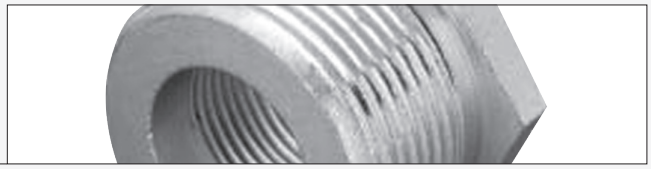

AQ SERIES

BSPT MALE x BSPT FEMALE REDUCER

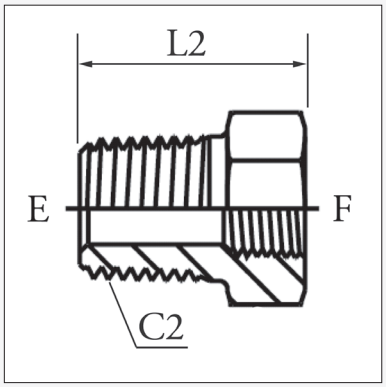

Product Code	Thread		Dimensions mm				
	E (BSPT)	F (BSPT)	C2	L2			
AQ-04-02	1/4" - 19	1/8" - 28	14	20.5			
AQ-06-02	3/8" - 19	1/8" - 28	19	21.6			
AQ-06-04	3/8" - 19	1/4" - 19	19	21.6			
AQ-08-04	1/2" - 14	1/4" - 19	22	28			
AQ-08-06	1/2" - 14	3/8" - 19	22	28			
AQ-12-04	3/4" - 14	1/4" - 19	29	29			
AQ-12-06	3/4" - 14	3/8" - 19	29	29			
AQ-12-08	3/4" - 14	1/2" - 14	29	29			
AQ-16-04	1"-11	1/4"-19	36	34			
AQ-16-06	1" - 11	3/8" - 19	35	34			
AQ-16-08	1" - 11	1/2" - 14	35	34			
AQ-16-12	1" - 11	3/4" - 14	35	34			
AQ-20-08	1.1/4" - 11	1/2" - 14	45	36.6			
AQ-20-12	1.1/4" - 11	3/4" - 14	45	37.6			
AQ-20-16	1.1/4" - 11	1" - 11	45	37.6			
AQ-24-12	1.1/2" -11	3/4" - 14	50	39.6			
AQ-24-16	1.1/2" -11	1" - 11	50	39.6			
AQ-24-20	1.1/2" -11	1.1/4" - 11	50	39.6			
AQ-32-16	2" - 11	1" - 11	65	45			
AQ-32-20	2" - 11	1.1/4" - 11	65	45			

AR SERIES

NPTF MALE x NPTF FEMALE REDUCER

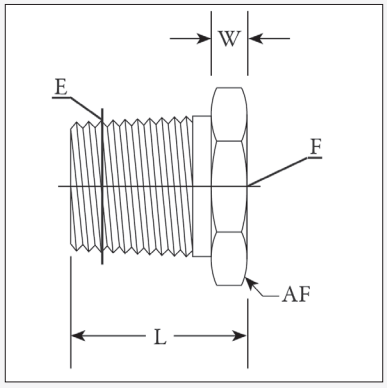

Product Code	Thread		Dimensions mm				
	E (NPT)	F (NPT)	L	W	AF		
AR-04-02	1/4" - 18	1/8" - 27	21.8	6.4	15.9		
AR-06-02	3/8" - 18	1/8" - 27	21.8	6.4	19.1		
AR-06-04	3/8" - 18	1/4" - 17	21.8	6.4	19.1		
AR-08-02	1/2" - 14	1/8" - 27	28.2	7.9	22.2		
AR-08-04	1/2" - 14	1/4" - 18	28.2	7.9	22.2		
AR-08-06	1/2" - 14	3/8" - 18	28.2	7.9	22.2		
AR-12-04	3/4" - 14	1/4" - 18	29.7	9.7	28.6		
AR-12-06	3/4" - 14	3/8" - 18	29.7	9.7	28.6		
AR-12-08	3/4" - 14	1/2" - 14	29.7	9.7	28.6		
AR-16-06	1" - 11.5	3/8" - 18	34.5	9.7	34.9		
AR-16-08	1" - 11.5	1/2" - 14	34.5	9.7	34.9		
AR-16-12	1" - 11.5	3/4" - 14	34.5	9.7	34.9		
AR-20-08	1.1/4" - 11.5	1/2" - 14	37.3	11.7	44.5		
AR-20-12	1.1/4" - 11.5	3/4" - 14	37.3	11.7	44.5		
AR-20-16	1.1/4" - 11.5	1" - 11.5	37.3	11.7	44.5		
AR-24-16	1.1/2" -11.5	1" - 11.5	39.9	13.5	50.8		
AR-24-20	1.1/2" -11.5	1.1/4" - 11.5	39.9	13.5	50.8		
AR-32-16	2" - 11.5	1" - 11.5	44.5	17.3	63.5		
AR-32-20	2" - 11.5	1.1/4" - 11.5	44.5	17.3	63.5		
AR-32-24	2" - 11.5	1.1/2" -11.5	44.5	17.3	63.5		

This page is part of a complete catalogue containing technical and safety data.
All data must be reviewed when selecting a product.
Pirtek reserve the right to change technical specifications without notice

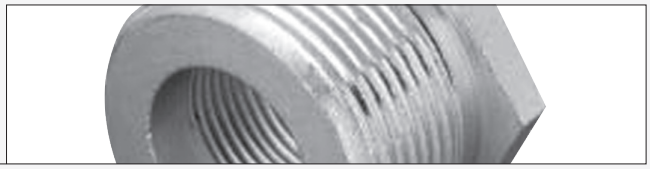

RI SERIES

BSPP REDUCING ADAPTOR
ELASTOMERIC SEAL

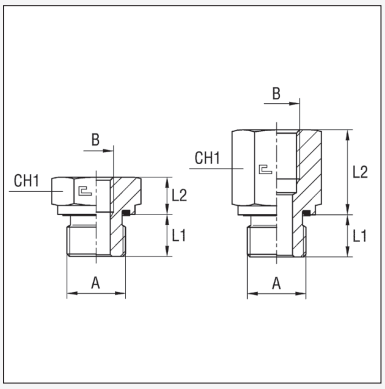

Max.W.P.bar	Product Code	A	B	L1	L2	CH1
400	RI-02-04	1/8	1/4	8	23	19
	RI-02-06 †	1/8	3/8	8	24	24
	RI-04-02	1/4	1/8	12	16	19
	RI-04-04	1/4	1/4	11.8	21.7	19
	RI-04-06	1/4	3/8	12	24	24
	RI-04-08	1/4	1/2	12	28	30
	RI-04-12	1/4	3/4	12	31	36
	RI-06-02 †	3/8	1/8	12	10.5	22
	RI-06-04	3/8	1/4	12	24	22
	RI-06-06	3/8	3/8	11.8	25.7	22
	RI-06-08	3/8	1/2	12	29	30
315	RI-06-12	3/8	3/4	12	32	36
400	RI-08-02 †	1/2	1/8	14	10	27
	RI-08-04 †	1/2	1/4	14	10	27
	RI-08-06	1/2	3/8	14	22	27
	RI-08-08	1/2	1/2	13.6	32.4	27
315	RI-08-12	1/2	3/4	14	32	36
	RI-08-16	1/2	1	14	35	41
	RI-08-20	1/2	1.1/4	14	39	55
	RI-12-04 †	3/4	1/4	16	10	32
	RI-12-06 †	3/4	3/8	16	10	32
	RI-12-08	3/4	1/2	16	26	32
	RI-12-12	3/4	3/4	15.9	32.2	36
	RI-12-16	3/4	1	16	35	41
	RI-12-20	3/4	1.1/4	16	39	55
250	RI-12-24	3/4	1/1/2	16	41	60
315	RI-16-04 †	1	1/4	18	11	41
	RI-16-06 †	1	3/8	18	11	41
	RI-16-08 †	1	1/2	18	11	41
	RI-16-12	1	3/4	18	29	41
	RI-16-20	1	1.1/4	18	39	55
250	RI-16-24	1	1.1/2	18	41	60
315	RI-20-08 †	1.1/4	1/2	20	12	50
	RI-20-12 †	1.1/4	3/4	20	12	50
	RI-20-16	1.1/4	1	20	31	50
250	RI-20-24	1.1/4	1.1/2	20	40	60
	RI-24-08 †	1.1/2	1/2	22	14	55
	RI-24-12 †	1.1/2	3/4	22	14	55
	RI-24-16 †	1.1/2	1	22	14	55
	RI-24-20	1.1/2	1.1/4	22	46	50

† Limited stock available

PIRTEK

This page is part of a complete catalogue containing technical and safety data.
All data must be reviewed when selecting a product.
Pirtek reserve the right to change technical specifications without notice

SOCKETS

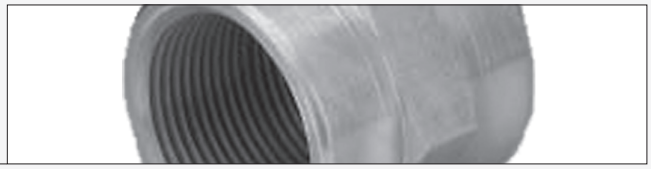

W SERIES

BSPT FEMALE x BSPT FEMALE
† BSPP FEMALE x BSPP FEMALE

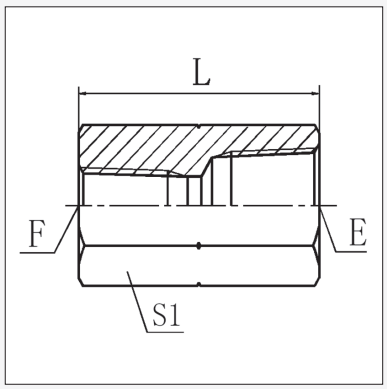

Product Code	Thread		Dimensions mm				
	E (BSPT)	F (BSPT)	L	S1			
W-02-02	1/8" - 28	1/8" - 28	20	14			
W-02-02P †	1/8"-28	1/8"-28	20	14			
W-04-02	1/4" - 19	1/8" - 28	30	19			
W-04-04	1/4" - 19	1/4" - 19	30	19			
W-04-04P †	1/4" - 19	1/4" - 19	30	19			
W-06-04	3/8" - 19	1/4" - 19	30	22			
W-06-06	3/8" - 19	3/8" - 19	30	22			
W-06-06P †	3/8" - 19	3/8" - 19	30	22			
W-08-04	1/2"-14	1/4"-19	37	27			
W-08-06	1/2" - 14	3/8" - 19	40	27			
W-08-08	1/2" - 14	1/2" - 14	40	27			
W-08-08P †	1/2" - 14	1/2" - 14	40	27			
W-12-08	3/4" - 14	1/2" - 14	42	36			
W-12-12	3/4" - 14	3/4" - 14	42	36			
W-12-12P †	3/4" - 14	3/4" - 14	42	36			
W-16-12	1" - 11	3/4" - 14	50	41			
W-16-16	1" - 11	1" - 11	50	41			
W-16-16P †	1" - 11	1" - 11	50	41			
W-20-16	1.1/4" - 11	1" - 11	52	50			
W-20-20	1.1/4" - 11	1.1/4" - 11	55	50			
W-20-20P †	1.1/4" - 11	1.1/4" - 11	50	50			
W-24-24P †	1.1/2" - 11	1.1/2" - 11	55	55			

† BSPP threads at both ends

W_U SERIES

UNO FEMALE X UNO FEMALE

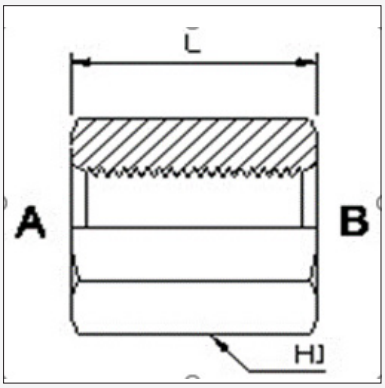

Product Code	Thread		Dimensionsmm	
	A (UNO)	B (UNO)	L	H1
W-07-07U	7/16"-20	7/16"-20	28.9	15.9
W-09-09U	9/16"-18	9/16"-18	29.5	20.6
W-12-12U	3/4"-16	3/4"-16	36	27
W-14-14U	7/8"-14	7/8"-14	40.6	28.6
W-17-17U	1.1/16"-12	1.1/16"-12	46.7	31.8

PIRTEK

† BSPP threads at both ends
This page is part of a complete catalogue containing technical and safety data.
All data must be reviewed when selecting a product.
Pirtek reserve the right to change technical specifications without notice

V / VHD SERIES

NPTF FEMALE x NPTF FEMALE

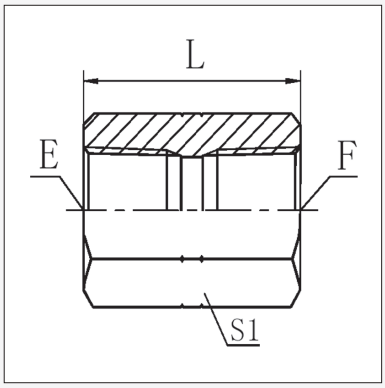

Product Code	Thread		Dimensions mm				
	E (NPT)	F (NPT)	L	S1			
V-02-02	1/8" - 27	1/8" - 27	24	17			
V-04-04	1/4" - 18	1/4" - 18	29	19			
V-06-06	3/8" - 18	3/8" - 18	29	22			
V-08-08	1/2" - 14	1/2" - 14	38	30			
V-12-12	3/4" - 14	3/4" - 14	39	36			
V-16-16	1" - 11.5	1" - 11.5	48	41			
V-20-20	1.1/4" - 11.5	1.1/4" - 11.5	49	50			
V-24-24	1.1/2" -11.5	1.1/2" -11.5	49	60			
V-32-32	2" - 11.5	2" - 11.5	50	70			
V-02-02	1/8" - 27	1/8" - 27	24	17			
V-04-04	1/4" - 18	1/4" - 18	29	19			
V-06-06	3/8" - 18	3/8" - 18	29	22			
V-08-08	1/2" - 14	1/2" - 14	38	30			
V-12-12	3/4" - 14	3/4" - 14	39	36			
V-16-16	1" - 11.5	1" - 11.5	48	41			
V-20-20	1.1/4" - 11.5	1.1/4" - 11.5	49	50			
V-24-24	1.1/2" -11.5	1.1/2" -11.5	49	60			
V-32-32	2" - 11.5	2" - 11.5	50	70			
HEAVY DUTY 10,000 PSI (700 BAR) HIGH PRESSURE SERIES							
VHD-04-04	1/4" - 18	1/4" - 18	29	19			
VHD-06-04	3/8" - 18	1/4" - 18	29	24			
VHD-06-06	3/8" - 18	3/8" - 18	29	24			

SECTION 13
FLANGE FITTINGS

			PAGE
AF3 / AF6	CODE 61/62 UNCUT SPLIT FLANGES	-	**D 85**
AFTF6	CODE 62 TAPERED FLANGE CLAMP	-	**D 85**
AXP3/AXP6	CODE 61 & 62 BLANKING PLUGS	-	**D 85 / D 86**
AX3	CODE 61 'BLIND' FLANGES	-	**D 86**
AX6	CODE 62 'BLIND' FLANGES	-	**D 86**
AZ3	CODE 61 SPLIT FLANGE CLAMPS	-	**D 86**
AZ6	CODE 62 SPLIT FLANGE CLAMPS	-	**D 87**
AZLT	LETOURNEAU SPLIT FLANGE CLAMPS	-	**D 87**
BFS	CODE 61 FLANGE THREADED BSPP	- / F	**D 87**
BFH	CODE 62 FLANGE THREADED BSPP	- / F	**D 87**
C611JM-C629JM	CODE FLANGES x JIC MALE	- / M	**D 88 - D 89**
C62JM9	CODE 62 x JIC MALE 90° FORGED	- / M	**D 90**
C62IPM	CODE 62 x BSPP MALE		**D 90**

SECTION 14 SEALS & ACCESSORIES

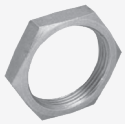

ED/ED-V	ELASTOMER SEAL ENCAPULATED BSPP & METRIC	-	**D 91**
FF3030	O-RINGS - ORFS	-	**D 87**
OKS	O-RINGS - SAE FLANGE (POLY)	-	**D 93**
KY	O-RINGS KOMATSU® FLANGE	-	**D 93**
X	UN-'O' RING (SAE O-RING BOSS)	-	**D 94**
Y / YD / YEH	O-RINGS - SAE FLANGE (NITRILE)	-	**D 94**
Q	BONDED SEAL - METRIC	-	**D 95**
Z	BONDED SEAL - BSPP	-	**D 95**
FF1332	ORFS LOCK NUT	-	**D 96**
CW	SAE CODE 62 / SUPERCAT SPACER	-	**D 96**
LNB	LOCKING NUT BSPP	-	**D 97**
LNJ	LOCKING NUT JIC / UNO	-	**D 97**
RRB	RETAINING RING BSPP	-	**D 98**
RROB	O-RING SUIT RRB RETAINING RING	-	**D 98**

PIRTEK

This page is part of a complete catalogue containing technical and safety data.
All data must be reviewed when selecting a product.
Pirtek reserve the right to change technical specifications without notice

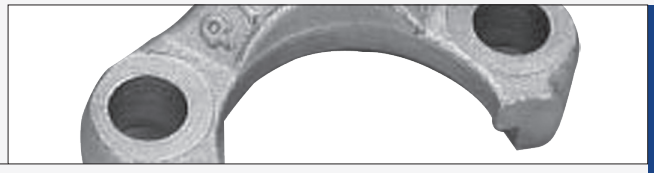

AF3 SERIES

CODE 61 UNCUT FLANGE CLAMP (3,000 PSI)

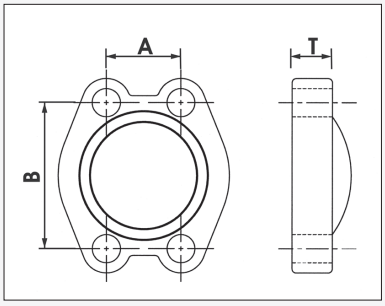

Product Code	Flange Size	Maximum W.P. bar	Dimensions mm			Bolt Size	
			A	B	T	Metric	UNC
AF3-12	3/4"	345	22.23	47.63	14	M10 x 30	3/8" - 1.5
AF3-16	1"	345	26.19	52.37	16	M10 x 30	3/8" - 1.5
AF3-20	1.1/4"	276	30.18	58.72	14	M10 x 30	7/16" - 1.75
AF3-24	1.1/2"	207	35.71	69.85	16	M12 x 35	1/2" - 1.75
AF3-32	2"	207	42.88	77.77	16	M12 x 35	1/2" - 1.75
AF3-40	2.1/2"	172	50.8	88.90	19	M12 x 40	1/2" - 1.75
AF3-48	3"	138	61.93	106.4	22	M16 x 50	5/8" - 2

AF6 SERIES & AFBS6

CODE 62 UNCUT FLANGE CLAMP (6,000 PSI)

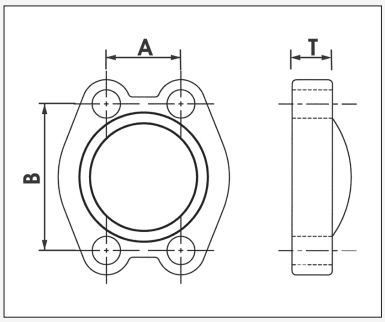

Product Code	Flange Size	Maximum W.P. bar	Dimensions mm			Bolt Size	
			A	B	T	Metric	UNC
AF6-12	3/4"	420	23.80	50.80	19	M10 x 35	3/8" - 1.5
AF6-16	1"	420	27.76	57.15	24	M12 x 45	7/16" - 1.75
AF6-20	1.1/4"	420	31.75	66.68	27	M12 x 45	1/2" - 1.75
AF6-24	1.1/2"	420	36.50	79.38	30	M16 x 55	5/8" - 11
AF6-32	2"	420	44.45	96.82	37	M20 x 70	3/4" - 10
AFBS6-32	2"	420	44.45	96.82	37	M20 x 70	3/4" - 10

AFTF6 SERIES

CODE 62 UNCUT TAPERED FLANGE CLAMP (6,000 PSI)

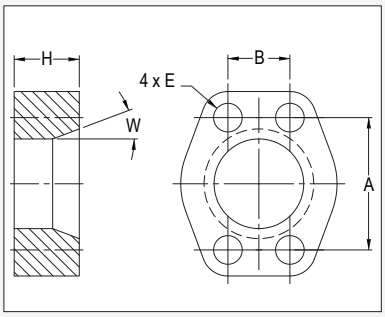

Product Code	Flange Size	Maximum W.P. bar	Dimensions mm			Bolt Size E	
			A	B	H	Metric	UNC
AFTF6-32	2"	420	44.45	96.82	50	M20 x 100	3/4" - 10

AXP3 SERIES

CODE 61 FLANGE BLANKING PLUG (3,000 PSI) DISC c/w O-Ring

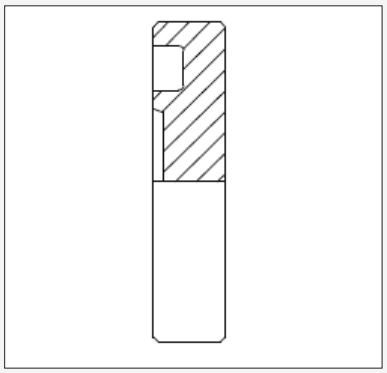

Product Code	Flange Size	Maximum W.P. Bar	Dimensions mm	
			A (Height)	B (Diameter)
AXP3-08	1/2"	345	6.73	30.18
AXP3-12	3/4"	345	6.73	38.10
AXP3-16	1"	345	8.00	44.45
AXP3-20	1 1/4"	276	8.00	50.80
AXP3-24	1 1/2"	207	8.00	60.33
AXP3-32	2"	207	9.53	71.42
AXP3-40	2 1/2"	172	9.53	84.12
AXP3-48	3"	138	9.53	101.60

PIRTEK

This page is part of a complete catalogue containing technical and safety data.
All data must be reviewed when selecting a product.
Pirtek reserve the right to change technical specifications without notice

FLANGE FITTINGS

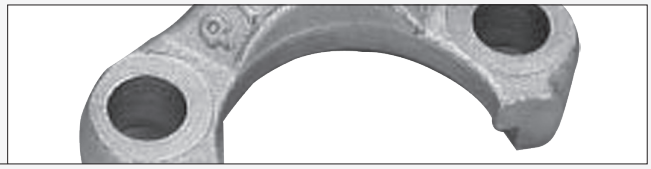

AXP6 SERIES

CODE 62 FLANGE BLANKING PLUG (6,000 PSI) DISC c/w O-Ring

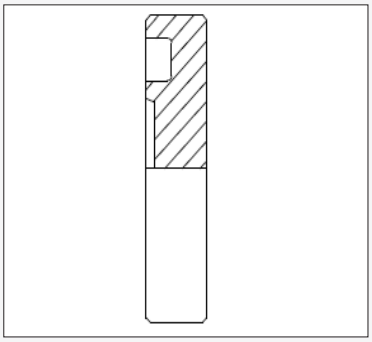

Product Code	Flange Size	Maximum W.P. Bar	Dimensions mm	
			A (Height)	B (Diameter)
AXP6-12	3/4"	414	8.76	41.28
AXP6-16	1"	414	9.53	47.63
AXP6-20	1.1/4"	414	10.29	53.98
AXP6-24	1.1/2"	414	12.57	63.50
AXP6-32	2"	414	12.57	79.38

AX3 SERIES

CODE 61 'BLIND' FLANGE (3,000 PSI)

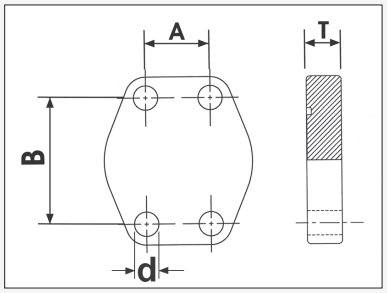

Product Code	Flange Size	Maximum W.P. bar	Dimensions mm				Bolt Size	
			A	B	d	T	Metric	UNC
AX3-12	3/4"	345	22.23	47.63	11	16	M10 x 30	3/8" - 16
AX3-16	1"	345	26.19	52.37	11	19	M10 x 30	3/8" - 16
AX3-20	1.1/4"	276	30.18	58.72	12	19	M10 x 30	7/16" - 14
AX3-24	1.1/2"	207	35.71	69.85	13.5	20	M12 x 35	1/2" - 13
AX3-32	2"	207	42.88	77.77	13.5	20	M12 x 35	1/2" - 13
AX3-40	2.1/2"	172	50.8	88.90	13.5	20	M12 x 40	1/2" - 13
AX3-48	3"	138	61.93	106.4	17.5	24	M16 x 50	5/8" - 11

AX6 SERIES

CODE 62 'BLIND' FLANGE (6,000 PSI)

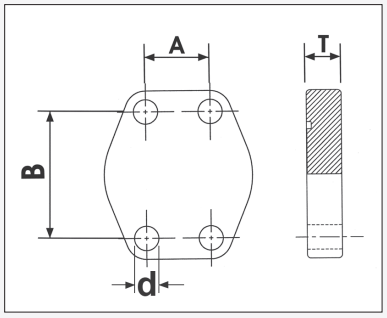

Product Code	Flange Size	Maximum W.P. bar	Dimensions mm				Bolt Size	
			A	B	d	T	Metric	UNC
AX6-12	3/4"	414	23.80	50.80	11	19	M10 x 35	3/8" - 16
AX6-16	1"	414	27.76	57.15	13	24	M12 x 45	7/16" - 14
AX6-20	1.1/4"	414	31.75	66.68	15	27	M12 x 45	1/2" - 13
AX6-24	1.1/2"	414	36.50	79.38	17	30	M16 x 55	5/8" - 11
AX6-32	2"	414	44.45	96.82	21	28	M20 x 70	3/4" - 10

AZ3 SERIES

CODE 61 SPLIT FLANGE (3,000 PSI)

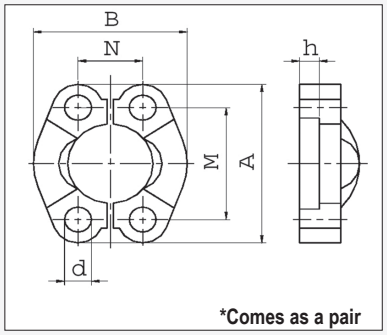

Product Code	Flange Size	Maximum W.P. bar	Dimensions mm						Bolt Size	
			A	B	M	N	h	d	Metric	UNC
AZ3-08	1/2"	345	53.8	46.1	38.1	17.5	6.2	9	M8 x 25	5/16" - 18
AZ3-10	5/8"	345	22.8	47.6	42.9	19.8	6.2	9	M8 x 35	5/16" - 18
AZ3-12	3/4"	345	65	52.4	47.6	22.2	6.2	11	M10 x 30	3/8" - 16
AZ3-16	1"	345	69.9	58.7	52.4	26.2	7.5	11	M10 x 30	3/8" - 16
AZ3-20	1.1/4"	276	79.2	73	58.7	30.2	7.5	12	M10 x 30	7/16" - 14
AZ3-24	1.1/2"	207	93.7	82.6	69.9	35.7	7.5	13.5	M12 x 35	1/2" - 13
AZ3-32	2"	207	101.6	96.8	77.8	42.9	9	13.5	M12 x 35	1/2" - 13
AZ3-40	2.1/2"	172	114	108	88.9	50.8	9	13.5	M12 x 40	1/2" - 13
AZ3-48	3"	138	135	130.6	106.4	61.9	9	17.5	M16 x 50	5/8" - 11
AZ3-56	3.1/2"	35	152	139.2	120.7	69.8	10.7	17.5	M16 x 50	5/8" - 11
AZ3-64	4"	35	161	149.8	130.3	76.8	10.7	16.8	M16 x 50	5/8" - 11

This page is part of a complete catalogue containing technical and safety data.
All data must be reviewed when selecting a product.
Pirtek reserve the right to change technical specifications without notice

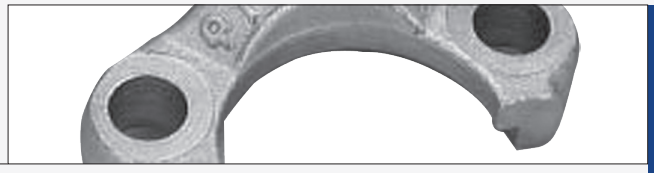

AZ6 SERIES

CODE 62 SPLIT FLANGE (6,000 PSI)

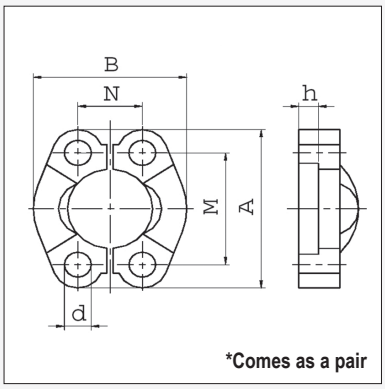

Product Code	Flange Size	Maximum W.P. bar	Dimensions mm						Bolt Size	
			A	B	M	N	h	d	Metric	UNC
AZ6-08	1/2"	414	56.3	49.2	40.5	18.2	7.2	9	M8 x 30	5/16" - 18
AZ6-12	3/4"	414	71.4	61.8	50.8	23.8	8.3	11	M10 x 35	3/8" - 16
AZ6-16	1"	414	81	71.4	57.2	27.8	9	13	M12 x 45	7/16" - 14
AZ6-20	1.1/4"	414	95.3	79.2	66.6	31.8	9.8	15	M12 x 45	1/2" - 13
AZ6-24	1.1/2"	414	112.8	96.8	79.3	36.6	12	17	M16 x 55	5/8" - 11
AZ6-32	2"	414	133.4	115.6	96.8	44.4	12	21	M20 x 70	3/4" - 10

AZLT SERIES

Letourneau SPLIT FLANGE

Product Code	Flange Size	Dimensions mm						Bolt Size	
		A	B	M	N	h	d	Metric	UNC
AZLT-24	1.1/2"	94	82.2	69.8	35.7	10	13.3	M12	7/16"

BFS SERIES

CODE 61 BSPP THREADED FLANGE (3,000 PSI)

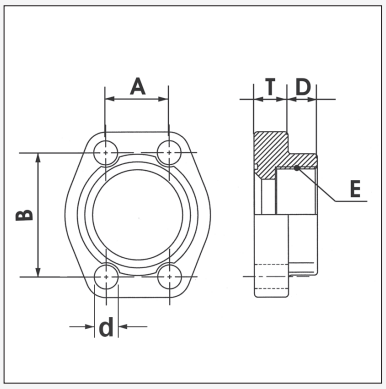

Product Code	Nominal Flange Size	Thread'E' BSPP	Maximum W.P. bar	Dimensions mm					Bolt Size	
				A	B	d	T	D	Metric	UNC
BFS-08	1/2"	1/2" - 14	345	17.48	38.1	9	16	20	M8 x 25	5/16" - 18
BFS-12	3/4"	3/4" - 14	345	22.23	47.63	11	18	18	M10 x 30	3/8" - 16
BFS-16	1"	1" - 11	345	26.19	52.37	11	18	20	M10 x 30	3/8" - 16
BFS-20	1.1/4"	1.1/4" - 11	276	30.18	58.72	12	21	20	M10 x 30	7/16" - 14
BFS-24	1.1/2"	1.1/2" - 11	207	35.71	69.85	13.5	25	20	M12 x 35	1/2" - 13
BFS-32	2"	2" - 11	207	42.88	77.77	13.5	25	20	M12 x 35	1/2" - 13

BFH SERIES

CODE 62 BSPP THREADED FLANGE (6,000 PSI)

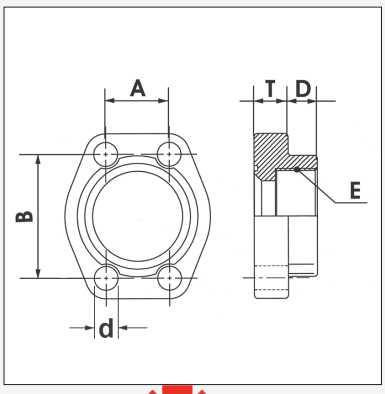

Product Code	Nominal Flange Size	Thread'E' BSPP	Maximum W.P. bar	Dimensions mm					Bolt Size	
				A	B	d	T	D	Metric	UNC
BFH-12	3/4"	3/4" - 14	414	23.80	50.80	11	21	14	M10 - 35	3/8" - 16
BFH-16	1"	1" - 11	414	27.76	57.15	13	25	17	M12 - 45	7/16" - 14
BFH-20	1.1/4"	1.1/4" - 11	414	31.75	66.68	15	27	18	M12 - 45	1/2" - 13
BFH-24	1.1/2"	1.1/2" - 11	414	36.50	79.38	17	30	20	M16 - 55	5/8" - 11
BFH-32	2"	2" - 11	414	44.45	96.82	21	37	28	M20 - 70	3/4" - 10

PIRTEK

This page is part of a complete catalogue containing technical and safety data.
All data must be reviewed when selecting a product.
Pirtek reserve the right to change technical specifications without notice

FLANGE FITTINGS

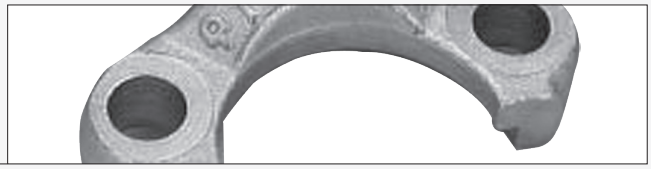

C611JM SERIES

CODE 61 FLANGE x JIC MALE STRAIGHT ADAPTOR

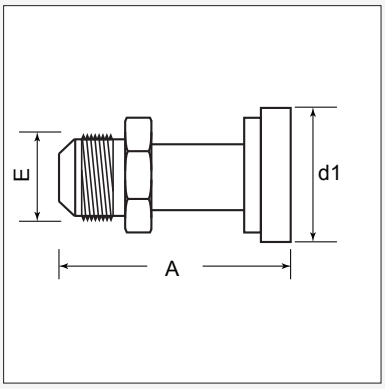

Product Code	Flange Size	JICThread E	Dimensions mm							
			A	d1						
C611JM-1217	3/4"	1.1/16" - 12	70.0	38.1						
C611JM-1617	1"	1.1/16" - 12	71.7	44.5						
C611JM-1621	1"	1.5/16" - 12	71.7	44.5						
C611JM-2021	1.1/4"	1.5/16" - 12	72.0	50.8						
C611JM-2026	1.1/4"	1.5/8" - 12	71.0	50.8						

C614JM SERIES

CODE 61 FLANGE x JIC MALE 45° ADAPTOR

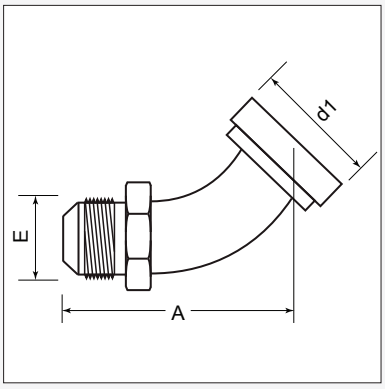

Product Code	Flange Size	JICThread E	Dimensions mm							
			A	d1						
C614JM-1217	3/4"	1.1/16" - 12	76.7	38.1						
C614JM-1617	1"	1.1/16" - 12	76.8	44.5						
C614JM-1621	1"	1.5/16" - 12	90.2	44.5						
C614JM-2021	1.1/4"	1.5/16" - 12	91.5	50.8						
C614JM-2026	1.1/4"	1.5/8" - 12	105.8	50.8						
C614JM-2430	1.1/2"	1.7/8" - 12	125.4	60.4						

C619JM SERIES

CODE 61 FLANGE x JIC MALE 90° ADAPTOR

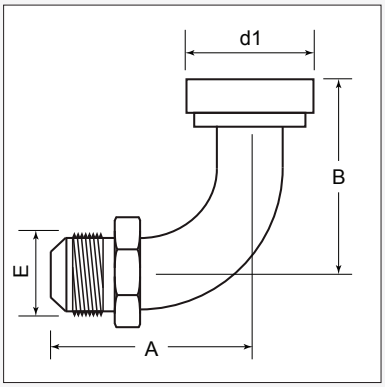

Product Code	Flange Size	JICThread E	Dimensions mm							
			A	d1	B					
C619JM-1217	3/4"	1.1/16" - 12	76.4	38.1	47.7					
C619JM-1617	1"	1.1/16" - 12	72.1	44.5	47.5					
C619JM-1621	1"	1.5/16" - 12	80.5	44.5	61.9					
C619JM-2021	1.1/4"	1.5/16" - 12	86.7	50.8	64.8					
C619JM-2026	1.1/4"	1.5/8" - 12	97.5	50.8	70.3					
C619JM-2421	1.1/2"	1.5/16" - 12	89.4	60.4	65.9					

This page is part of a complete catalogue containing technical and safety data.
All data must be reviewed when selecting a product.
Pirtek reserve the right to change technical specifications without notice

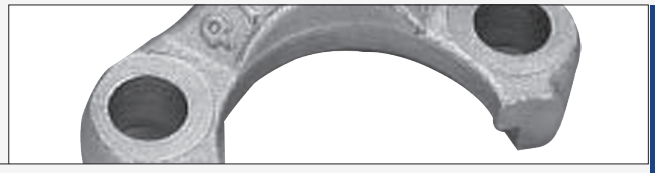

C621JM SERIES

CODE 62 FLANGE x JIC MALE STRAIGHT ADAPTOR

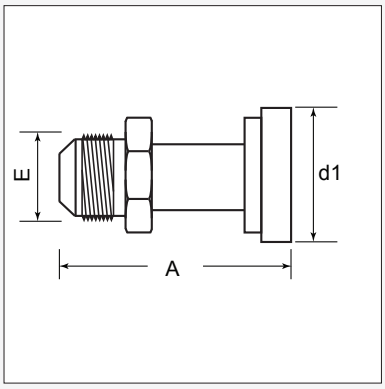

Product Code	Flange Size	JICThread E	Dimensions mm	
			A	d1
C621JM-1217	3/4"	1.1/16" - 12	69.6	41.4
C621JM-1617	1"	1.1/16" - 12	71.7	47.8
C621JM-1621	1"	1.5/16" - 12	72.0	47.8
C621JM-2021	1.1/4"	1.5/16" - 12	78.2	54.1
C621JM-2026	1.1/4"	1.5/8" - 12	77.1	54.1

C624JM SERIES

CODE 62 FLANGE x JIC MALE 45° ADAPTOR

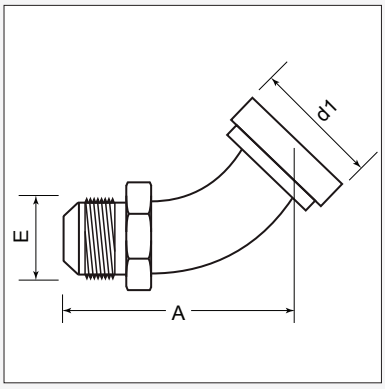

Product Code	Flange Size	JICThread E	Dimensions mm	
			A	d1
C624JM-1217	3/4"	1.1/16" - 12	76.3	41.4
C624JM-1617	1"	1.1/16" - 12	75.6	47.8
C624JM-1621	1"	1.5/16" - 12	83.8	47.8
C624JM-2021	1.1/4"	1.5/16" - 12	93.0	54.1
C624JM-2026	1.1/4"	1.5/8" - 12	117.3	63.5

C629JM SERIES

CODE 62 FLANGE x JIC MALE 90° ADAPTOR

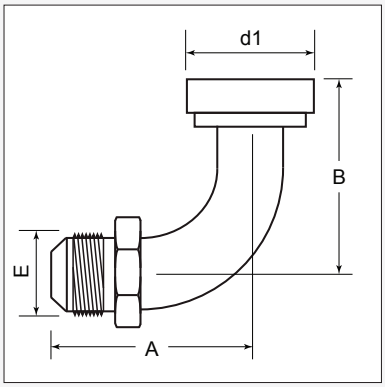

Product Code	Flange Size	JICThread E	Dimensions mm		
			A	d1	B
C629JM-1212	3/4"	3/4" - 16	52.9	41.4	49.4
C629JM-1217	3/4"	1.1/16" - 12	67.5	41.4	54.2
C629JM-1221	3/4"	1.5/16" - 12	84.3	41.4	64.2
C629JM-1617	1"	1.1/16" - 12	71.6	47.8	60.1
C629JM-1621	1"	1.5/16" - 12	82.0	47.8	70.0
C629JM-2021	1.1/4"	1.5/16" - 12	84.2	54.1	71.9
C629JM-2026	1.1/4"	1.5/8" - 12	101.0	54.1	88.0
C629JM-2430	1.1/2"	1.7/8"-12	116	63.5	109

FLANGE FITTINGS

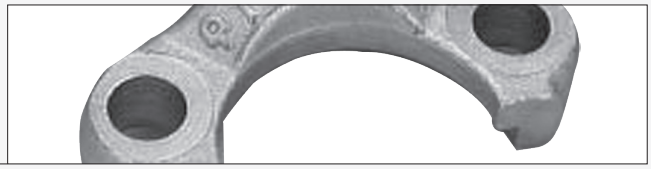

C62JM9 SERIES

CODE 62 FLANGE x JIC MALE 90° FORGED BODY

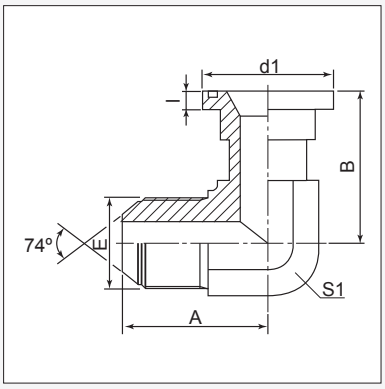

Product Code	Flange Size	JICThread	Dimensions mm							W.P.
			A	B	I	d1	S1			bar
C62JM9-1621	1"	1.5/16" - 12	49	60.2	9.53	47.6	33			414

C621PM SERIES

CODE 62 FLANGE x BSPP MALE STRAIGHT ADAPTOR

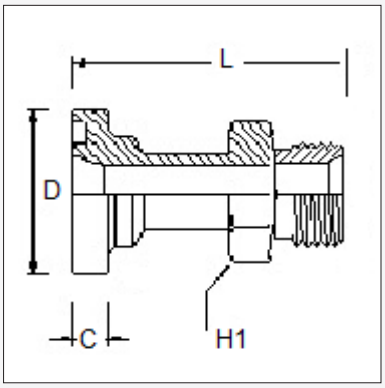

Product Code	Flange Size	BSPP Thread	Dimensions mm			
			C	D	L	H1
C621PM - 3224	2"	1.1/2" - 11	12.6	79.4	95	69

PIRTEK

This page is part of a complete catalogue containing technical and safety data.
All data must be reviewed when selecting a product.
Pirtek reserve the right to change technical specifications without notice

BO SERIES

O-RINGS TO SUIT BF1HD HOSE TAILS

Material: 90 Durometer Buna N **Temperature Range:** -34°C to +120°C

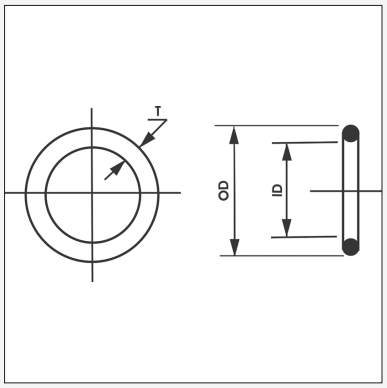

Product Code	Dash Size	SuitBF1HD	Dimensions mm		
			OD	ID	T
BO-12	12	BF1HD-1212J	19.9	16.7	1.6
BO-16	16	BF1HD-1616J	25.3	22.1	1.6
BO-20	20	BF1HD-2020J	32.3	29.1	1.6

ELASTOMER SEAL DIN 3869

SUITS BSP PARALLEL & METRIC PARALLEL ENCAPSULATED THREADS

ED = NBR 85 DuroA Temperature range: -30ºC to 100ºC

ED-V = Viton®(FKM) 80 DuroA Temperature range: -20ºC to 200ºC

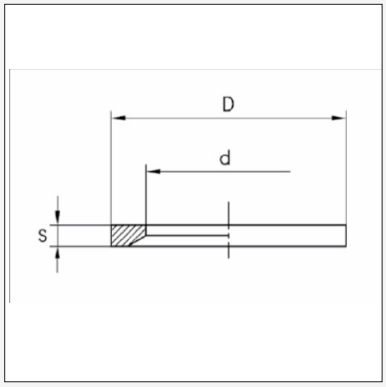

Product Code		Interchange	Dimensions (mm)				
NBR	Viton®		Metric	BSPP	D	d	s
ED-02/10M		*	10X1	1/8	11.9	8.4	1
ED-04/14M	ED-V-04/14M	*	14X1.5	1/4	16.5	11.6	1.5
ED-06	ED-V-06			3/8	18.9	14.7	1.5
ED-08	ED-V-08			1/2	23.9	18.5	1.5
ED-08M			8X1		9.9	6.5	1
ED-12/26M/27M	ED-V-12/26M/27M	*	26X1.5 - 27X2	3/4	29.2	23.9	1.5
ED-12M			12X1.5		14.4	9.8	1.5
ED-16/33M	ED-V-16/33M	*	33X2	1	35.7	29.7	2
ED-16M			16X1.5		18.9	13.8	1.5
ED-18M			18X1.5		20.9	15.7	1.5
ED-20/42M	ED-V-20/42M	*	42X2	1.1/4	45.8	38.8	2
ED-20M			20X1.5		22.9	17.8	1.5
ED-22M			22X1.5		24.3	19.6	1.5
ED-24/48M	ED-V-24/48M	*	48X2	1.1/2	50.7	44.7	2
ED-32				2	66.1	56.5	4

FF3030 SERIES

O-RINGS TO SUIT ORFS ADAPTORS

Material: 90 Durometer Buna N **Temperature Range:** -34°C to +120°C

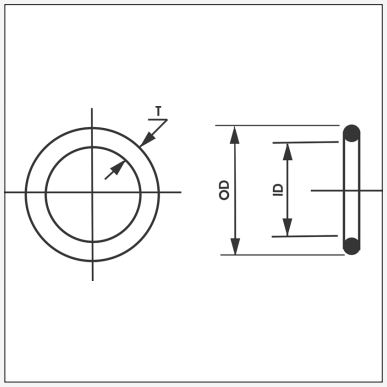

Product Code	Dash Size	Suit ORFS	Dimensions mm			
			OD	ID	T	
FF3030-11	04	9/16" - 18	11.20	7.65	1.78	
FF3030-12	06	11/16" -16	12.80	9.25	1.78	
FF3030-14	08	13/16" - 16	15.98	12.42	1.78	
FF3030-16	10	1" - 14	19.16	15.60	1.78	
FF3030-18	12	1.3/16" - 12	22.33	18.77	1.78	
FF3030-21	16	1.7/16" - 12	27.08	23.52	1.78	
FF3030-25	20	1.11/16" - 12	33.43	29.87	1.78	
FF3030-29	24	2" - 12	41.38	37.82	1.78	

PIRTEK

This page is part of a complete catalogue containing technical and safety data.
All data must be reviewed when selecting a product.
Pirtek reserve the right to change technical specifications without notice

O-RING DATA

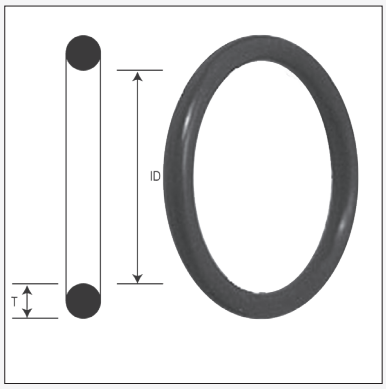

O-RING DETAILS FOR LIGHT & HEAVY METRIC HOSE TAILS - 70 DURO NBR					
PRODUCT CODE	METRIC SERIES	METRIC THREAD SIZE		TUBE O.D. (MM)	DIMENSIONS (MM)
		LIGHT SERIES	HEAVY SERIES		I.D. X THICKNESS (T)
DKOR-06L/S	DKL / DKS	M12X1.5	M14X1.5	6	4 X 1.5
DKOR-08L/S	DKL / DKS	M14X1.5	M16X1.5	8	6 X 1.5
DKOR-10L/S	DKL / DKS	M16X1.5	M18X1.5	10	7.5 X 1.5
DKOR-12L/S	DKL / DKS	M18X1.5	M20X1.5	12	9 X 1.5
DKOR-14S	DKS	-	M22X1.5	14	10 X 2
DKOR-15L/16S	DKL / DKS	M22X1.5	M24X1.5	15 /16	12 X 2
DKOR-18L	DKL	M26X1.5	-	18	15 X 2
DKOR-20S	DKS	-	M30X2	20	16.3 X 2.4
DKOR-22L	DKL	M30X2	-	22	20 X 2
DKOR-25S	DKS	-	M36X2	25	20.3 X 2.4
DKOR-28L	DKL	M36X2	-	28	26 X 2
DKOR-30S	DKS	-	M42X2	30	25.3 X 2.4
DKOR-35L	DKL	M45X2	-	35	32 X 2.5
DKOR-38S	DKS	-	M52X2	38	33.3 X 2.4
DKOR-42L	DKL	M52X2	-	42	38 X 2.5

PIRTEK
This page is part of a complete catalogue containing technical and safety data.
All data must be reviewed when selecting a product.
Pirtek reserve the right to change technical specifications without notice

OKS SERIES

HIGH PERFORMANCE SEALS TO SUIT SAE FLANGE FITTINGS

Material: Blue 93 Duro Polyester Polyurethane (AU) Temperature range -30°C to 100°C

Product Code	Dash Size		Dimensions mm				
			OD	ID	T		
OKS-12	12		31.75	23.37	3.50		
OKS-16	16		39.62	31.24	3.50		
OKS-20	20		44.45	36.07	3.50		
OKS-24	24		53.98	45.34	3.50		
OKS-32	32		63.5	54.86	3.50		

FEATURES:

- A general purpose compound suitable for applications requiring resistance to high temperatures and compression set
- Recommended for use in SAE flanges (especially Code 62) where elevated temperatures and arduous conditions are expected
- Special square section profile prevents seal 'pumping' to provide reliable flange sealing
- Outstanding resistance to blended aromatic fuels and straight aromatics as well as halogenated hydrocarbons
- 600 bar maximum working pressure
- Good resistance to strong acids and steam

KY SERIES

O-RINGS TO SUIT KOMATSU® FLANGES

Material: 90 Durometer Buna N **Temperature Range:** -34°C to +120°C

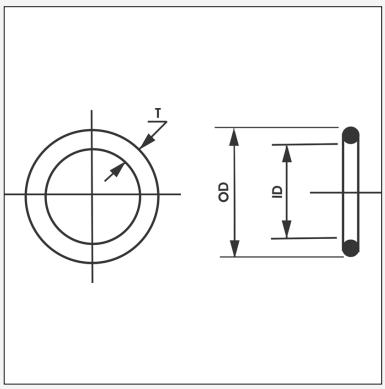

Product Code	Dash Size	BSNumber	Dimensions mm				
			OD	ID	T		
KY-08	1/2"	HNBR-90		20.80	2.40		
KY-10 †	5/8"	HNBR-90		21.70	3.50		
KY-12	3/4"	HNBR-90		24.70	3.50		
KY-16	1"	HNBR-90		31.70	3.50		
KY-20	1.1/4"	HNBR-90		37.70	3.50		
KY-24	1.1/2"	HNBR-90		47.70	3.50		
KY-32	2"	HNBR-90		59.40	3.10		

IMPORTANT NOTE:

These O-Rings incorporate metric dimensions and are specifically for use in conjunction with Komatsu® flanges only (ie K Prefix Pirtek Flanges).

The SAE Standard is not applicable.

DO NOT use these O-Rings in conjunction with SAE Standard flanges.

ACCESSORIES

X SERIES

O-RINGS TO SUIT UN'O' RING ADAPTORS

Material: 90 Durometer Buna N **Temperature Range:** -34°C to +120°C

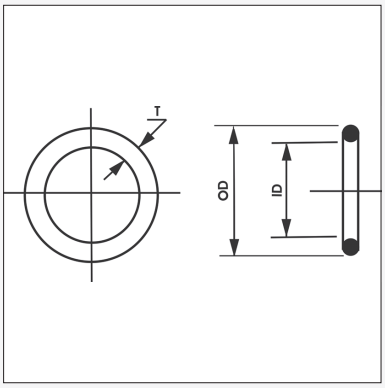

Product Code	Dash Size	BSNumber	Dimensions mm				
			OD	ID	T		
X-07	7/16" - 20	BS904	12.57	8.92	1.83		
X-08	1/2" - 20	BS905	14.18	10.52	1.83		
X-09	9/16" - 18	BS906	15.85	11.89	1.98		
X-10	5/8" - 18	BS907	17.46	13.46	2.08		
X-12	3/4" - 16	BS908	20.78	16.36	2.21		
X-14	7/8" - 14	BS910	24.10	19.18	2.46		
X-17	1.1/16" - 12	BS912	29.37	23.47	2.95		
X-19	1.3/16" - 12	BS914	32.51	26.61	2.95		
X-21	1.5/16" - 12	BS916	35.64	29.74	2.95		
X-26	1.5/8" - 12	BS920	43.47	37.47	3.00		
X-30	1.7/8" - 12	BS924	49.69	43.69	3.00		
X-40	2.1/2" - 12	BS932	65.36	59.36	3.00		

Y / YD* SERIES

O-RINGS TO SUIT SAE FLANGE FITTINGS

*YD SERIES O-RINGS ARE FOR GENUINE CATERPILLAR® XT FITTINGS ONLY

Material: 90 Durometer Buna N **Temperature Range:** -34°C to +120°C

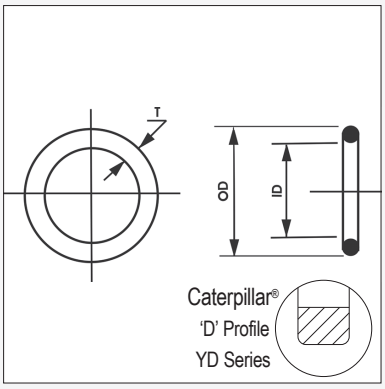

For arduous conditions, please consider the use of OKS O-Rings as an alternative

Product Code	Dash Size	BS	Dimensions mm				
			OD	ID	T		
Y-08	1/2"	210	25.7	18.64	3.53		
Y-10 †	5/8"		29.0	21.82	3.57		
Y-12	3/4"	214	32.05	24.99	3.53		
Y-16	1"	219	39.98	32.92	3.53		
Y-20	1.1/4"	222	44.75	37.69	3.53		
Y-24	1.1/2"	225	54.28	47.22	3.53		
Y-32	2"	228	63.8	56.74	3.53		
Y-40	2.1/2"	232	76.5	69.44	3.53		
Y-48	3"	237	92.38	85.32	3.53		
Y-56	3.1/2"	241	105.08	98.02	3.53		
Y-64	4"	245	117.7	110.7	3.53		
'D' PROFILE O-RINGS - CATERPILLAR® SPECIFICATION							
YD-12	3/4"			25.4	5		
YD-16	1"			31.9	5		
YD-20	1.1/4"			38.2	5		
YD-24	1.1/2"			44.7	5		
YD-32	2"			63.9	5		

† SAE Standard not applicable on this size (Komatsu specific) See KY-10 for stock and for ordering.

YEH SERIES

2" O-RINGS TO SUIT EXTRA HEAVY HOSE TAILS

Material: 70 Durometer EPDM **Temperature Range:** -40°C to +100°C

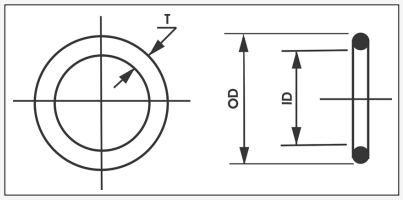

Product Code	Dash Size	BSNumber	Dimensions mm				
			OD	ID	T		
YEH-32	2"	-	49.36	44.12	2.62		

IMPORTANT NOTE:

These O-Rings are not used as a flange seal, but to provide a hydraulic seal between the hose tail and hose inner liner when using 2" extra heavy interlock series hose tails.

2 O-Rings are needed for each tail.

PIRTEK

This page is part of a complete catalogue containing technical and safety data.
All data must be reviewed when selecting a product.
Pirtek reserve the right to change technical specifications without notice

BONDED / DOWTY WASHERS

Standard Washers

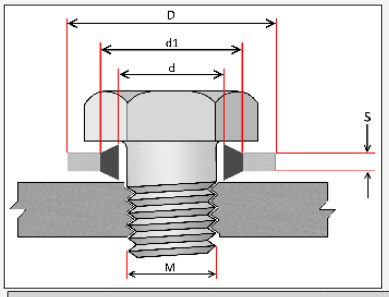

Self Centering Washers

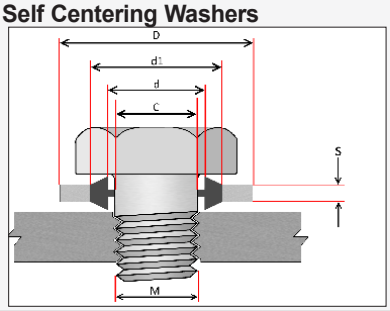

Q SERIES - METRIC

"Product Code"	"Thread Size (M)"	Size Reference	Dimensions (mm) D	d1	d	S
Q-10	M10	217	16	12.4	10.7	1.5
Q-12	M12	222	18	14.4	12.7	1.5
Q-14	M14	227	22	16.4	14.7	1.5
Q-16	M16	229	24	18.4	16.7	1.5
Q-18	M18	232	26	20.4	18.7	1.5
Q-20	M20	233	28	22.5	20.7	1.5
Q-22	M22	236	30	24.4	22.7	2
Q-26	M26	239	35	26.7	28.4	2
Q-27	M27	240	36	29	27.2	2
Q-30	M30	242	39	33	31	2
Q-33	M33	243	42	35.8	33.7	2
Q-42	M42	247	53	44.4	42.7	3
Q-48	M48	248	59	50.8	48.7	3

"Product Code"	"Thread Size (M)"	Size Reference	Dimensions (mm) D	d1	d	S	C	Min Burst (Bar)
QC-08	M8	866	14	10.4	8.7	1.8	6.6	1330
QC-10	M10	217	16	12.4	10.7	1.5	8.1	1300
QC-12	M12	222	18	14.4	12.7	1.5	9.7	1150
QC-14	M14	227	22	16.4	14.7	1.5	11.38	1510
QC-16	M16	229	24	18.4	16.7	1.5	13.41	1370
QC-18	M18	232	26	20.4	18.7	1.5	14.76	1260
QC-20	M20	233	28	22.5	20.7	1.5	16.76	1140
QC-22	M22	236	30	24.4	22.7	2	18.74	1080
QC-24	M24	875	32	26.4	24.7	2	20.11	1065
QC-26	M26	239	35	26.7	28.4	2	22.3	1050
QC-27	M27	240	36	29	27.2	2	23.3	1130
QC-30	M30	242	39	33	31	2	25.7	870
QC-33	M33	243	42	35.8	33.7	2	28.7	840
QC-42	M42	247	53	44.4	42.7	3	36.5	930
QC-48	M48	248	59	50.8	48.7	3		790

Z SERIES - BSPP Mild Steel & Stainless Steel

MILD STEEL ZINC PLATED

"Product Code"	"Thread Size (M)"	Size Reference	Dimensions (mm) D	d1	d	S
Z-02	1/8" - 28	020	15.88	11.84	10.37	2
Z-04	1/4" - 19	021	20.57	15.21	13.74	2
Z-06	3/8" - 19	023	23.8	18.75	17.28	2
Z-08	1/2" - 14	025	28.58	23.01	21.54	2.34
Z-10	5/8" - 14	026	31.75	24.97	23.49	2.34
Z-12	3/4" - 14	027	34.93	28.53	27.05	2.34
Z-16	1" - 11	030	42.8	36.88	33.89	3.25
Z-20	1.1/4" - 11	032	52.38	45.93	42.93	3.25
Z-24	1.1/2" - 11	033	58.6	51.39	48.44	3.25
Z-32	2" - 11	036	73.03	63.63	60.58	3.25
Z-40	2.1/2" - 11	039	90.17	79.38	76.08	3.25

"Product Code"	"Thread Size (M)"	Size Reference	Dimensions (mm) D	d1	d	S	C	Min Burst (Bar)
ZC-02	1/8" - 28	020	15.88	11.84	10.37	2	8.3	1480
ZC-04	1/4" - 19	021	20.57	15.21	13.74	2	11.2	1540
ZC-06	3/8" - 19	023	23.8	18.75	17.28	2	14.76	1230
ZC-08	1/2" - 14	025	28.58	23.01	21.54	2.34	18.24	1120
ZC-10	5/8" - 14	026	31.75	24.97	23.49	2.34	20.27	1240
ZC-12	3/4" - 14	027	34.93	28.53	27.05	2.34	23.83	1050
ZC-16	1" - 11	030	42.8	36.88	33.89	3.25	29.92	780
ZC-20	1.1/4" - 11	032	52.38	45.93	42.93	3.25	38.45	690
ZC-24	1.1/2" - 11	033	58.6	51.39	48.44	3.25	44.45	690
ZC-32	2" - 11	036	73.03	63.63	60.58	3.25	56.26	780
ZC-40	2.1/2" - 11	039	90.17	79.38	76.08	3.25	71.5	680

304 STAINLESS STEEL

SSZ-04	1/4" - 19	021	20.57	15.21	13.74	2	SSZC-04	1/4" - 19	021	20.57	15.21	13.74	2	11.2	1540
SSZ-06	3/8" - 19	023	23.8	18.75	17.28	2	SSZC-06	3/8" - 19	023	23.8	18.75	17.28	2	14.76	1230
SSZ-08	1/2" - 14	025	28.58	23.01	21.54	2.34	SSZC-08	1/2" - 14	025	28.58	23.01	21.54	2.34	18.24	1120
SSZ-12	3/4" - 14	027	34.93	28.53	27.05	2.34	SSZC-12	3/4" - 14	027	34.93	28.53	27.05	2.34	23.83	1050
SSZ-16	1" - 11	030	42.8	36.88	33.89	3.25	SSZC-16	1" - 11	030	42.8	36.88	33.89	3.25	29.92	780

Bonded Dowty Washers

Two versions: Mild steel zinc plated and 304 Stainless Steel
Steel BS1449 Part 1: 1983 CS4 BRH 5
Tensile strength of steel 540 MN/m^2 min.
Zinc plated to DEF STAN 03-20/1
Colour passivated to DEF 03-33
Rubber: NBR nitrile

A rectangular section, metal washer, with a trapezoidal shaped ring of vulcanised nitrile rubber bonded to the inside.

The seal is for use in high pressure environments where copper washers are unsuitable.

Sometimes equipped with a thin additional membrane to assist in self centralising the seal over the BSPP thread during installation.

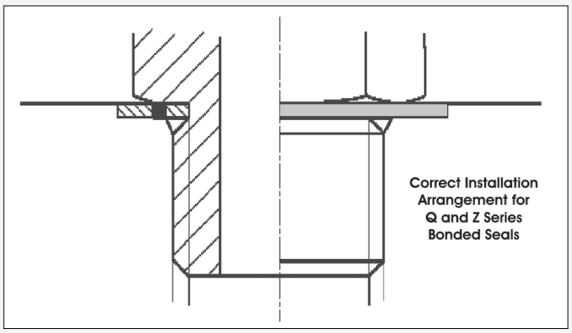

PIRTEK

This page is part of a complete catalogue containing technical and safety data.
All data must be reviewed when selecting a product.
Pirtek reserve the right to change technical specifications without notice

FF1332 SERIES
LOCK NUT FOR ORFS ADAPTORS

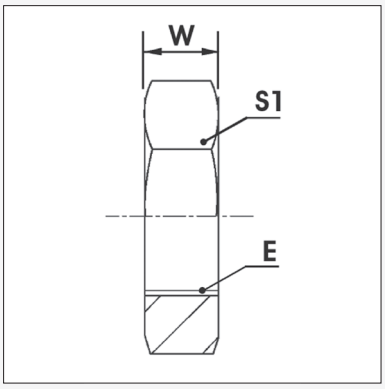

Product Code	Dash Size	ORFS Thread	Dimensions mm				
			OD	ID	T		
FF1332-04	04	9/16" - 18					
FF1332-06	06	11/16" -16					
FF1332-08	08	13/16" - 16					
FF1332-10	10	1" - 14					
FF1332-12	12	1.3/16" - 12					
FF1332-16	16	1.7/16" - 12					
FF1332-20	20	1.11/16" - 12					
FF1332-24	24	2" - 12					

CW SERIES
'SUPERCAT' FLANGE WASHER

Spacer Ring to allow use of Code 62 flanges where a 14.2 mm thick flange is required

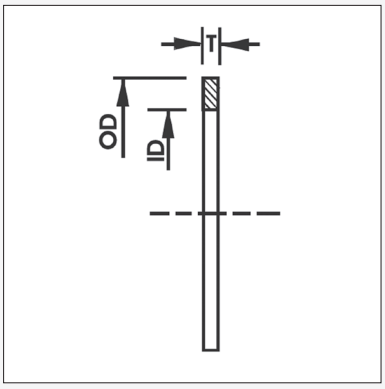

This adaptor is provided only for emergency use in conjunction with Pirtek 'I' Series Interlock hose tails.

Always use Pirtek Supercat flanges as a first preference

Product Code	Dash Size	BSNumber	Dimensions mm				
			OD	ID	T		
CW-12	12		41.3		5.4		
CW-16	16		47.6		4.7		
CW-20	20		54.0		3.9		
CW-24 †	24		63.5		1.6		
CW-32	32		79.4		1.6		

† Some minor filing may be needed to achieve a sliding fit over Code 62 flanges in this size

This page is part of a complete catalogue containing technical and safety data.
All data must be reviewed when selecting a product.
Pirtek reserve the right to change technical specifications without notice

LNB SERIES

LOCKING NUT BSPP

Suits adjustable elbows and Bulkheads using a BSPP thread

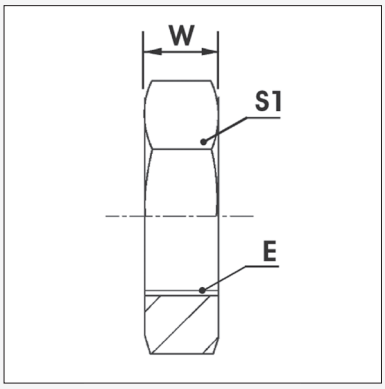

Product Code	Dash Size	Suits BSPP Thread	Dimensions mm		
			W	S1	E
LNB-02	02	1/8" - 28			
LNB-04	04	1/4" - 19			
LNB-06	06	3/8" - 19			
LNB-08	08	1/2" - 14			
LNB-12	12	3/4" - 14			
LNB-16	16	1" - 11			

LNJ SERIES

LOCKING NUT JIC

Suits adjustable elbows and Bulkheads using a JIC / UNO thread

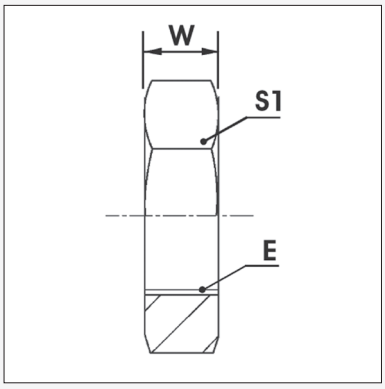

Product Code	Dash Size	Suits JIC Thread	Dimensions mm		
			W	S1	E
LNJ-07	07	7/16" - 28			
LNJ-09	09	9/16" - 18			
LNJ-12	12	3/4" - 16			
LNJ-14	14	7/8" - 14			
LNJ-17	17	1.1/16" - 12			
LNJ-21	21	1.5/16" - 12			

RRB SERIES

RETAINING RING BSPP - STEEL

Suits adjustable elbows using a BSPP adjustable thread

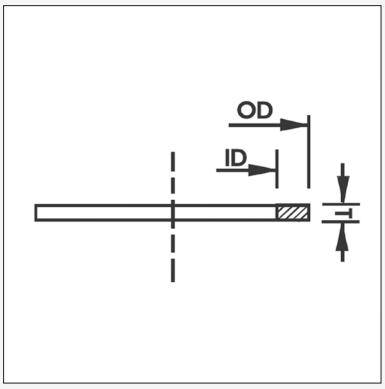

Product Code	Dash Size	Suits BSPP Thread	Dimensions mm				
			OD	ID	T		
RRB-02	02	1/8" - 28	15.0	12.0	1.4		
RRB-04	04	1/4" - 19	19.5	15.8	1.9		
RRB-06	06	3/8" - 19	23.5	19.4	1.9		
RRB-08	08	1/2" - 14	28.5	23.0	1.9		
RRB-12	12	3/4" - 14	34.5	28.5	1.9		
RRB-16	16	1" - 11	43.5	36.4	2.6		
RRB-20	20	1.1/4" - 11	52.5	45.2	2.6		
RRB-24	24	1.1/2" - 11	60.0	50.7	2.6		

RROB SERIES

O-RING TO SUIT BSPP

Suits adjustable elbows using a BSPP adjustable thread - NBR - 90 Duro

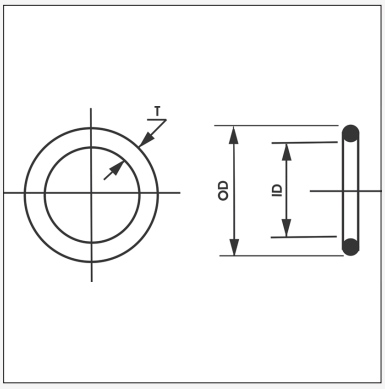

Product Code	Dash Size	Suits BSPP Size	BS Number	Dimensions mm		
				OD	ID	T
RROB-02	02	1/8" - 28	BS011	11.21	7.65	1.78
PROB-04	04	1/4" - 19	BS111	16.00	10.77	2.62
RROB-06	06	3/8" - 19	BS113	19.19	13.95	2.62
RROB-08	08	1/2" - 14	BS115	22.36	17.142	2.62
RROB-12	12	3/4" - 14	BS119	28.71	23.47	2.62
RROB-16	16	1" - 11	BS217	36.80	29.74	3.53
RROB-20	20	1.1/4" - 11	BS222	44.75	37.69	3.53
RROB-24	24	1.1/2" - 11	BS224	51.15	44.09	3.53

This page is part of a complete catalogue containing technical and safety data.
All data must be reviewed when selecting a product.
Pirtek reserve the right to change technical specifications without notice

ALPHANUMERIC INDEX

ProductCode	Page #
45°ELBOWS	D 48
90°ELBOWS	D 31
A	D 3
AA	D 78
AAB	D 72
AABN	D 72
AABP	D 72
AAM	D 73
AAMG/AAMN	D 73
AAMP	D 74
AAP	D 75
AAU	D 75
AB	D 78
ABN	D 78
ADAPTFIXED	D 71
ADAPTUNION	D 71
AF3	D 85
AF6	D 85
AH	D 12
AM	D 12
AN / ANHD	D 13
ANN	D 76
ANU	D 76
AP	D 65
AQ	D 77
AR	D 77
AS	D 65
AT	D 65
ATH	D 66
AU	D 66
AUU	D 76
AV	D 67
AVH	D 68
AW	D 69
AX	D 69
AX3	D 86
AX6	D 86
AZ3	D 86
AZ6	D 87
B	D 3
BAN	D 63

ProductCode	Page #
BAS	D 64
BB	D 63
BBJM	D 63
BC	D 57
BD	D 58
BF	D 58
BFH	D 87
BFS	D 87
BG	D 55
BH	D 55
BJ	D 56
BM / BP	D 56
BO	D 91
C	D 4
C611JMetc	D 88
CAA	D 32
CAB	D 32
CABI	D 32
CAH	D 33
CAL	D 64
CAS	D 64
CBA	D 19
CBB	D 19
CBBI	D 19
CBH	D 20
CBJ	D 20
CBJN	D 21
CBM	D 21
CEA	D 33
CED	D 35
CEJ	D 36
CEPN	D 35
CFA	D 36
CFAE	D 37
CFJ	D 37
CGB	D 49
CJA	D 49
CJAN	D 50
CJD	D 50
CJDN	D 51
CJJ	D 51

ProductCode	Page #
CJPN	D 52
CKA/CKB	D 52
CLA	D 36
CLAN	D 37
CLF	D 37
CLJ	D 37
CLJN	D 38
CLP	D 38
CLPN	D 38
CMA	D 21
CMAI	D 21
CROSSES	D 18
CSA	D 39
CTA	D 22
CTAN	D 22
CTP	D 22
CVA	D 39
CVAN	D 40
CVANE (/L)	D 41
CVD	D 41
CVDN	D 42
CVDP/CVDPA	D 42
CVE	D 42
CVF	D 43
CVJ / CVJN	D 43
CW	D 96
CXA	D 21
CYA	D 23
D	D 5
DKOR	D 92
ED	D 91
EPD / EPDP	D 23
EPF	D 23
EPFFM	D 24
EPFLF	D 24
EPJ	D 24
EPK	D 25
EPKKL	D 25
EPKLK	D 25
EPP	D 26
EPS	D 26

ProductCode	Page #
F	D 6
FF1201	D 15
FF1202	D 16
FF1204	D 16
FF1206	D 53
FF1208	D 44
FF1220	D 27
FF1221	D 28
FF1227	D 29
FF1229	D 30
FF1231	D 17
FF1234	D 44
FF1236	D 44
FF1238	D 45
FF1239	D 45
FF1240	D 53
FF1248	D 29
FF1254	D 68
FF1260LN	D 17
FF1262LN	D 46
FF1265	D 28
FF1266	D 28
FF1291	D 46
FF1311	D 65
FF1319	D 69
FF1332	D 96
FF3018	D 64
FF3020	D 58
FF3021	D 59
FF3030	D 87
FF3031	D 58
FF3032	D 59
FLANGE	D 81
H	D 7
HN	D 7
J	D 8
K	D 9
KA	D 13
KAB	D 45
KB / KN / KS	D 14
KEA	D 47

ProductCode	Page #
KF	D 14
KFA	D 47
KJA	D 54
KKA	D 54
KMA	D 29
KP	D 14
KU	D 67
KVA	D 47
KW	D 70
KY	D 93
KYA	D 30
L	D 9
LNB / LNJ	D 97
M	D 10
OKS	D 93
P	D 11
PLUGS	D 62
PS	D 15
Q	D 95
R	D 11
REDBUSHES	D 70
RI	D 81
RRB/RROB	D 98
SEALS	D 84
SOCKETS	D 70
STRAIGHT	D 02
TEES	D 18
TUBEFITTINGS	D 61
TUBEWELD	D 48
V / VHD	D 83
W	D 82
W_U	D 82
W (P)	D 82
X	D 94
Y / YD / YEH	D 94
Z / SSZ	D 95