Click on Produce Code / Description to Be Linked to That Page

Safe Practice Requirements for H.P. Ball Valves	F 3
SLV / SSV Lockable Ball Valves	F 4
CLBV Clipline Ball Valve	F 7
SPBV Threaded BSPP Ball Valve	F 8
Ball Valve Accessories Handles Seal Kits Lock Plate	F 10
Large Bore / Flanged / Stainless Steel Ball Valves	F 12
SSBV Stainless Steel High Pressure Ball Valves	F 13
STBV 3-Way Ball Valves	F 15
Flow Rates for Ball Valves	F 16
Couplings Pictorial Index	F 17
ISO-A and ISO-B Couplers	F 18-22
7000 / 7500 Series Flat Face Couplers	F 23
7200 / 7600 Series Couple under Pressure Flat Face	F 24
8000 Series Screw to Connect Couplers	F 25-26
9000 Series 'Tema' Compatible High Flow Couplers	F 27
9500 Series High Flow Couplers	F 28
3000 Series 'Enerpac' Compatible Couplers	F 29
DQ Series Diagnostic Couplers	F 30
2000 Series Inline Check Valves	F 31
SJ Series Swivel Joints	F 32

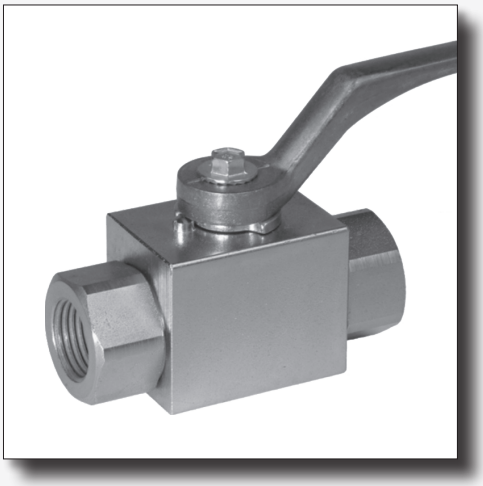

NOTES

PIRTEK

This page is part of a complete catalogue containing technical and safety data.
All data must be reviewed when selecting a product.
Pirtek reserve the right to change technical specifications without notice

HIGH PRESSURE BALL VALVES
SAFE PRACTICE REQUIREMENTS

GENERAL INSTRUCTION

- Ball valves must be operated only at the positions of the stop pins ie fully open or fully closed
- Never use a ball valve to control or throttle flow - seals and seats will be damaged and heat will be induced to the system
- Do not use mechanical aids to assist turning ball valves (gripping jaws on spindles, levers, pipe extensions, hammers etc)
- Ensure all special operating conditions concerning the application are communicated to the supplier before selecting a ball valve (including criteria such as humidity, vibrations, operation frequency, electromagnetic fields, explosive zones, anti-static etc)
- Store valves as supplied in a dry area free of contamination and with protective caps in place
- Do not operate ball valves more than 10 times per minute in explosive zones, as induced heat may create a dangerous situation
- Always wear protective gloves - the handle will adopt the temperature of the fluid
- Never modify a ball valve by drilling mounting holes, welding etc

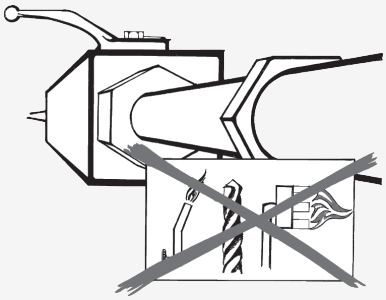

INSTALLATION

- Use only a ball valve that is correctly matched to the intended application with regard to pressure rating, materials of construction, operating temperature, port configuration and lock out capabilities
- EN ISO 5211.8 stipulates that a ball valves must turn 1/4 turn clockwise to close the valve, and incorporate a notch on the spindle to show the current ball position
- Installation should be by qualified people and in a totally depressurised pipe system
- Clean thoroughly all system components prior to installation to prevent damage to the sealing elements
- Always hold any end adaptors securely to counter torque loads when tightening fittings
- Do not tighten or loosen the end adaptors from their factory settings in any way

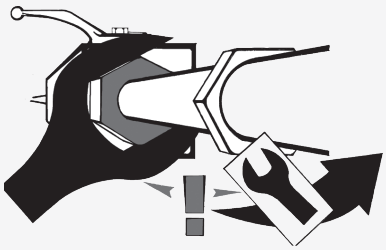

- Always drain a valve and the complete system before dismantling if dealing with toxic, combustible or explosive media
- With flanged valves, ensure flange connection bolts are properly centred with the opposing flange before tightening bolts in a crosswise procedure
- Use only clean undamaged seals of the correct Standard between flanges
- Use correct size and strength of bolts, and heed length of engagement requirements in tapped holes
- Heed good welding practice when using welded end valves
- Eliminate any welding residue to ensure a clean internal space of the valve
- Ensure the ball cavity remains within tolerable limits during the welding process to prevent distortion and seat / seal damage
- Ensure the installed valve meets with the requirements of the pipe layout to ensure proper accessibility

INITIAL OPERATION

- Reread all instructions and operational requirements prior to commissioning, and gain any necessary approvals
- Use only qualified personnel for initial commissioning of the system
- Note that the operating torque of a valve that has been in storage or has been in the same operating position for a prolonged period will be noticeably higher than published breakaway torques
- Fully bleed the pipeline system before initial operation

ALL AIR BUBBLES MUST BE REMOVED PRIOR TO FULL PRESSURISATION. RISK OF EXPLOSION!!

- Build the pressure up slowly
- If a ball valve is used as a pipe line termination point, the open end adaptor must be properly closed to prevent any internal debris being expelled unexpectedly

MAINTENANCE & SURVEYS

- When draining a system to prevent frost damage or for cleaning, drain the ball cavity by opening the ball to the 45° position
- Disassembly of ball valves must only be performed by authorised Personnel only
- Poor quality sealants must not be used for storage
- Inspect valves regularly for proper operating function (6 monthly minimum)
- Replace corroded, leaking or immovable ball valves without delay

REMOVAL FROM SERVICE

- Never remove a ball valve without first relieving system pressure
- Always turn a valve to the mid position to properly relieve the internal cavity pressure
- Drain the system of fluid completely
- Wear personal protective equipment as necessary

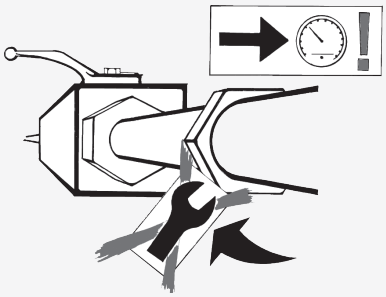

FLOW RATES

- See page F 16

SLV / SSV

LOCKABLE BALL VALVES
STANDARD AND SUPER STAPLE

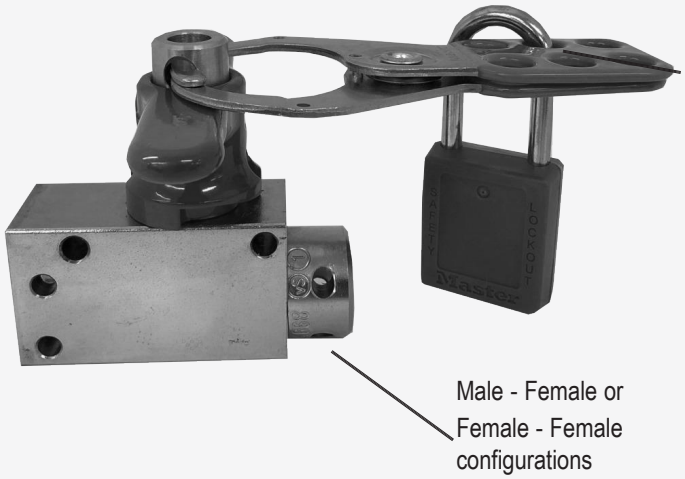

Description:

- Steel bodied ball valve with either fixed female or male - female configurations
- Patented safety locking design that is fully compliant with padlock and scissor lock in common use, **refer to note**.
- Able to be configured to the customer requirement as to handle position (standard configuration is for the valve to be closed when the handle is in the pictured position)

Materials and Specifications:

- Passivated zinc corrosion protection
- All steel construction
- Nitrile seals
- High working pressures
- Handle movement involves a lift and twist operation, preventing tampering or disassembly when a padlock is in place (the lifting action is prevented by the presence of a padlock)
- Temp. Range -20 to +100°C with standard seals

Features:

- Handles can be colour coded to customer request (red is standard)
- Mounting holes are incorporated in some styles - Refer Pirtek

NOTE: 38mm dia. Safety lockout jaws and / or 6mm dia. shackle safety padlock to be used only.

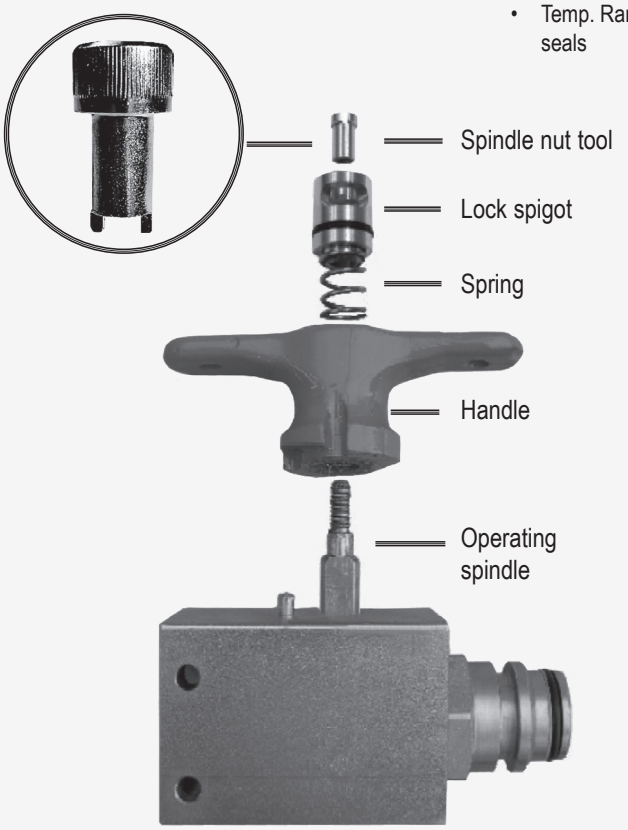

PROCEDURE TO ALTER THE LOCK FUNCTION

1. Start with the handle in the open position
2. Unscrew the spindle nut at the top of the handle (use the tool circled at left)
3. Remove the lock spigot and spring before sliding the handle vertically clear of the operating spindle
4. Rotate the handle through 1/2 turn anti-clockwise
5. Refit the handle in the new position
6. Replace the spring and lock spigot
7. Secure the handle using the spindle nut tool

REPLACEMENT HANDLE REPAIR KIT

The components shown at left (excluding the valve body and spindle nut tool) can be ordered using Product Code **SV-HD6RD-KIT**

SPINDLE NUT TOOL

Available to order using Product Code **SLV-TOOL**

PIRTEK

This page is part of a complete catalogue containing technical and safety data.
All data must be reviewed when selecting a product.
Pirtek reserve the right to change technical specifications without notice

SLV01

LOCKABLE BALL VALVE
FEMALE - FEMALE STD. STAPLE

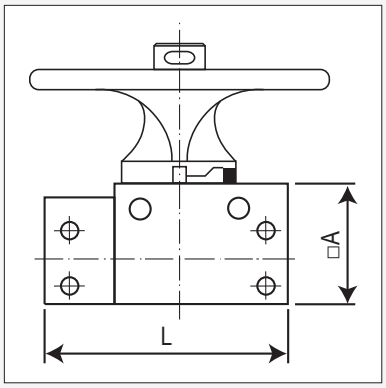

Config. 1 Square

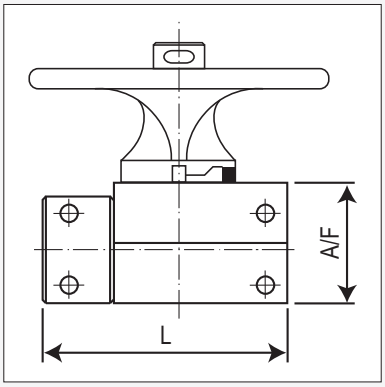

Config. 2 Hexagonal

Product Code	Configuration	Nominal Bore			Pressure Rating bar		Dimensions mm		
		Dash	Inch	DN	Working	Burst	L	□A	AF
SLV01-06-6RD	1	6	3/8"	10	500	1250	88	40	-
SLV01-08-6RD	1	8	1/2"	12	500	1250	112	40	-
SLV01-12-6RD	1	12	3/4"	20	500	1250	115	50	-
SLV01-16-6RD	2	16	1"	25	400	1000	135	-	60

SLV31F

LOCKABLE BALL VALVE
MALE - FEMALE STD. STAPLE

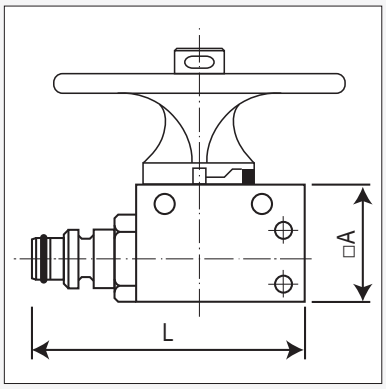

Config. 1 Square

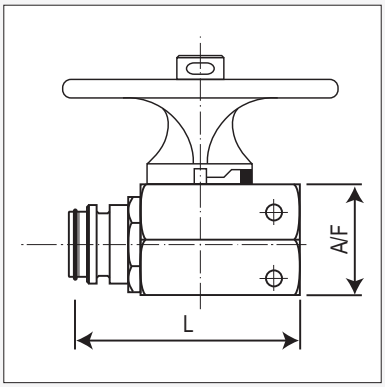

Config. 2 Hexagonal

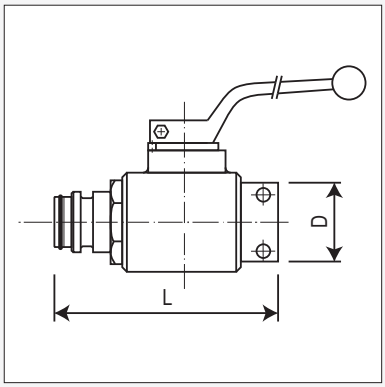

Config. 3 Round

Product Code	Configuration	Nominal Bore			Pressure Rating bar		Dimensions mm			
		Dash	Inch	DN	Working	Burst	L	□A	AF	D
SLV31F-06-6RD	1	6	3/8"	10	500	1250	88	40	-	-
SLV31F-08-6RD	1	8	1/2"	12	500	1250	112	40	-	-
SLV31F-12-6RD	1	12	3/4"	20	500	1250	115	50	-	-
SLV31F-16-6RD	2	16	1"	25	400	1000	135	-	60	-
SLV31F-20-6RD	2	20	1.1/4"	32	300	600	145	-	60	-
SLV31F-24-1PL †	3	24	1.1/2"	40	250	500	190	-	-	70
SLV31F-32-1PL †	3	32	2"	50	200	400	200	-	-	82

† See next page for Configuration 3 padlock arrangement (1PL suffix)

PIRTEK

This page is part of a complete catalogue containing technical and safety data.
All data must be reviewed when selecting a product.
Pirtek reserve the right to change technical specifications without notice

SSV01

LOCKABLE BALL VALVE
FEMALE - FEMALE SUPER STAPLE

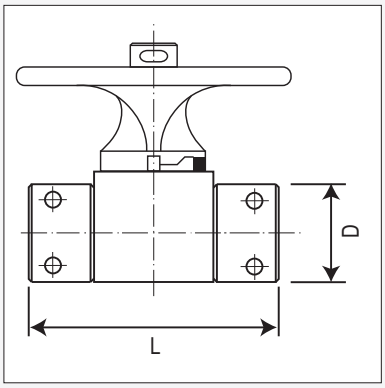

Product Code	Configuration	Nominal Bore			Pressure Rating bar		Dimensions mm		
		Dash	Inch	DN	Working	Burst	L	D	
SSV01-20-6RD	1	20	1.1/4"	32	420	700	195	70	

SSV31

LOCKABLE BALL VALVE
MALE - FEMALE SUPER STAPLE

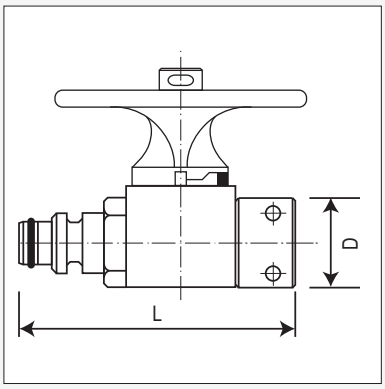

Config. 1 Square

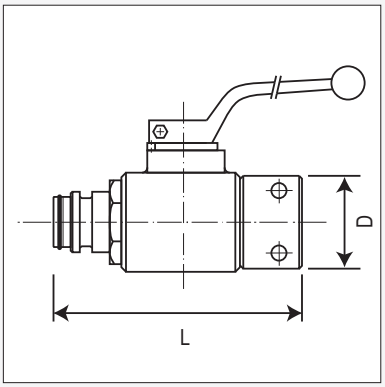

Config. 3 Round

Config. 3 Padlock Arrangement

Product Code	Configuration	Nominal Bore			Pressure Rating bar		Dimensions mm			
		Dash	Inch	DN	Working	Burst	L	D		
SSV31-12-6RD	1	12	3/4"	20	500	1250	160	45		
SSV31-16-6RD	1	16	1"	25	420	1000	205	60		
SSV31-20-6RD	1	20	1.1/4"	32	420	700	205	95		
SSV31-20-1PL	3	20	1.1/4"	32	420	700	205	82		
SSV31-24-1PL	3	24	1.1/2"	40	420	700	235	82		
SSV31-32-1PL	3	32	2"	50	350	700	260	95		

PIRTEK

This page is part of a complete catalogue containing technical and safety data.
All data must be reviewed when selecting a product.
Pirtek reserve the right to change technical specifications without notice

CLBV

LOCKABLE BALL VALVE
CLIPLINE MALE - FEMALE

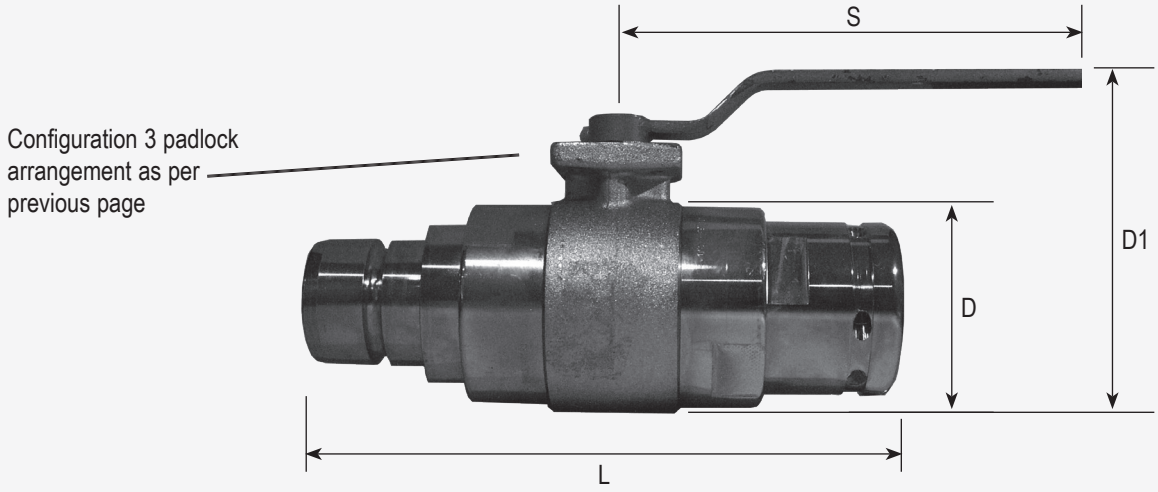

Description:

- Steel bodied ball valve with fixed male - female configuration
- Lockable lever handle with positive stop points at the open and closed positions
- Lever can be removed (Allen key required) and repositioned as desired

Materials and Specifications:

- CR6 free corrosion protection
- All steel construction
- Nitrile seals
- 140 bar working pressure
- Temp. Range -20°C to 100°C with standard seals

Features:

- Allows lockable valve installation on Clipline circuits

Product Code	Configuration	Nominal Bore			Pressure Rating bar		Dimensions mm			
		Dash	Inch	DN	Working	Burst	L	D	D1	S
CLBV-63	3	63	2.1/2"	65	140	280	370	125	215	300

SCV

STAPLELOK CHECK VALVE
STANDARD STAPLELOK M-F

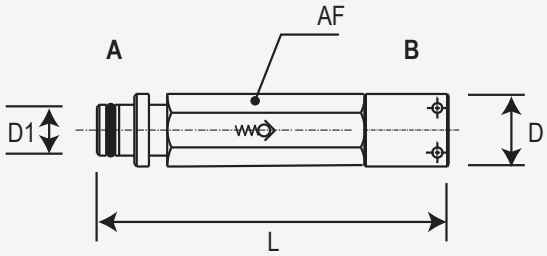

Product Code	Nominal Bore			Pressure Rating bar			Dimensions mm			
	Dash	Inch	DN	Cracking	Working	Burst	D	D1	L	AF
SCV-10	6	3/8"	10	0.5	420	700	30	14	132	36

SPBV

HIGH PRESSURE BALL VALVES
CONVENTIONAL BSPP FEMALE ENDS

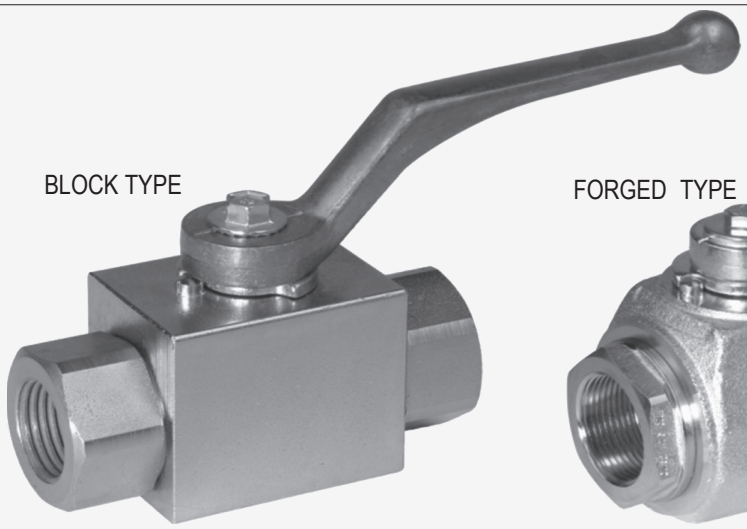

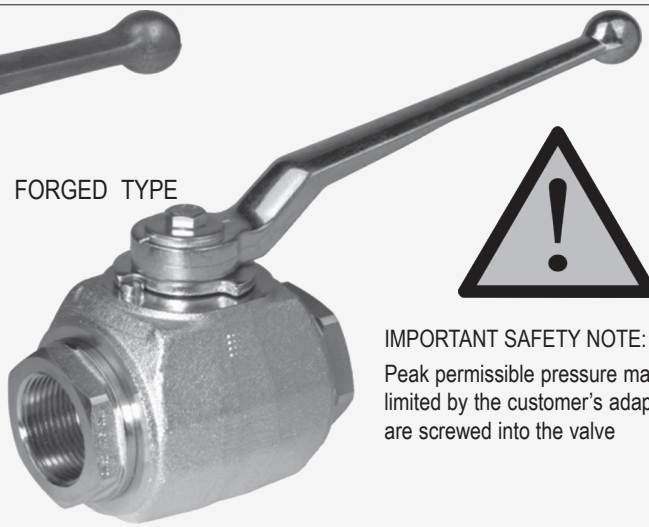

IMPORTANT SAFETY NOTE:

Peak permissible pressure may be limited by the customer's adaptors that are screwed into the valve

Description:

- Steel bodied ball valve in either block style or forged steel
- Pressure balanced floating ball between seals ensures a maintenance free life
- Pre-loaded ball seats guarantee tightness even in vacuum
- Stem fitted from within the housing prevents blow-off of the stem
- Block type comes with mounting holes -04 = 4.5mm -06 through -20 = 6.5mm

Materials and Specifications:

- Free cutting steel body, ball, seat and stem
- Polyamide ball seat
- Perbunan NBR O-rings
- CR6 free corrosion protection
- Steel handle for block type
- Zinc alloy handles for forged type
- Temp. Range -20 to +100°C with standard seals

Applications:

- General hydraulics
- steam
- paint
- thermo oil
- Special seals may be required in some applications. Please advise if planning an application other than normal hydraulics

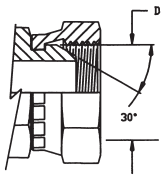

Applicable Standards
Thread Form: AS 1722.2-1992, ISO 228
Materials Available: S12L14 (Mild Steel) GB12361-12362 Part II (Drop-Forged) 316 Stainless Steel

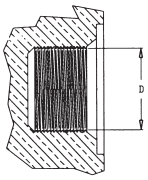

Applicable Standards
Thread Form: AS 1722.2-1992, ISO 228
Sealing area: DIN 3852 Part 2 Form X

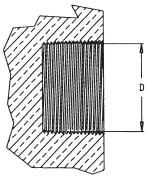

Applicable Standards
Thread Form: AS 1722.2-1992, ISO 228
Materials Available: S12L14 (Mild Steel) GB12361-12362 Part II (Drop-Forged) 316 Stainless Steel

Pipe Size	Dash Size	Correct Torque (Nm)	Nominal Thread Size & Pitch	Max Work Press (Bar)		Thread ID 'D' on Diagram	
				Fixed	Swivel	mm	ins
1/8"	2	20	1/8" - 28	550	550	8.59	0.338
1/4"	4	50	1/4" - 19	550	550	11.46	0.451
3/8"	6	80	3/8" - 19	520	520	14.96	0.589
1/2"	8	100	1/2" - 14	380	380	18.65	0.734
5/8" *	10	120	5/8" - 14	275	275	20.6	0.811
3/4"	12	200	3/4" - 14	275	275	24.13	0.95
1"	16	380	1" - 11	240	240	30.3	1.193
1 1/4"	20	500	1 .1/4" - 11	200	200	38.97	1.534
1 1/2"	24	600	1. 1/2" - 11	175	175	44.86	1.766
2"	32	750	2" - 11	140	140	56.67	2.231

** 5/8" Size is not subject to Standards*

Note: The torque values given are for plated carbon steel components without lubrication.

PIRTEK

This page is part of a complete catalogue containing technical and safety data.
All data must be reviewed when selecting a product.
Pirtek reserve the right to change technical specifications without notice

SPBV

HIGH PRESSURE BALL VALVES
CONVENTIONAL BSPP FEMALE ENDS

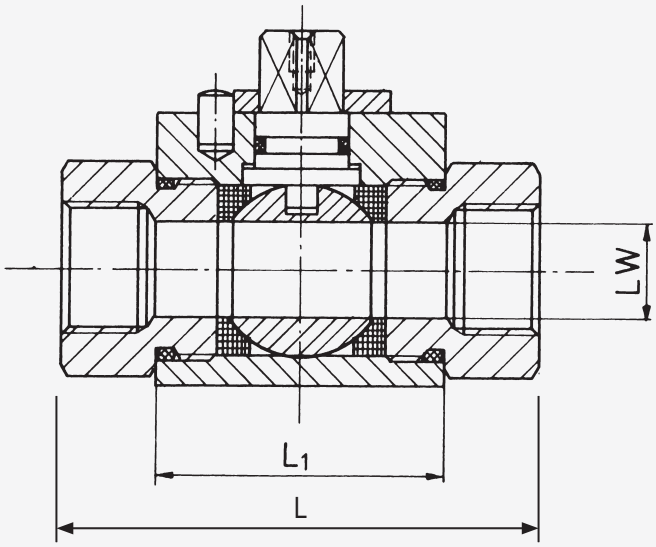

BLOCK TYPE BODY
REFER COLUMN 2
OF TABLE BELOW

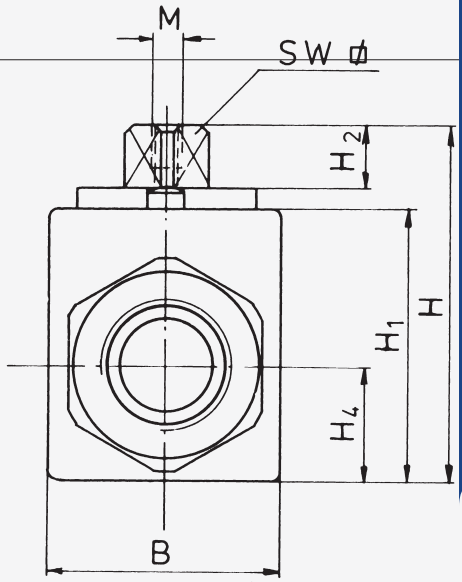

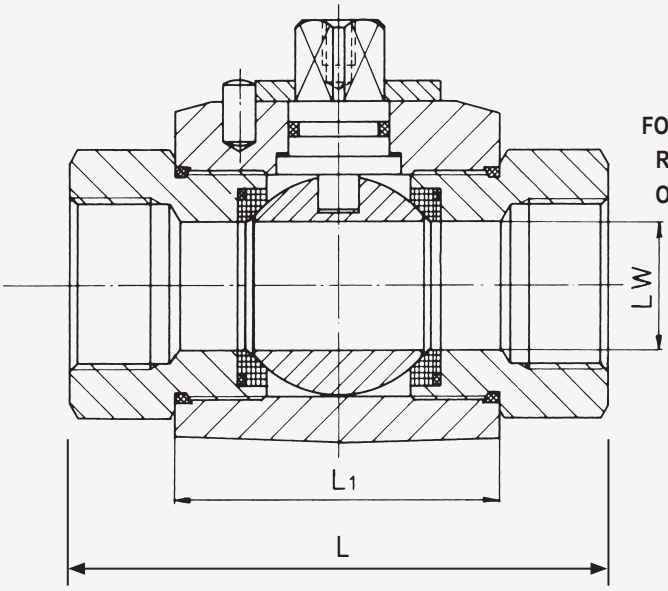

FORGED TYPE BODY
REFER COLUMN 2
OF TABLE BELOW

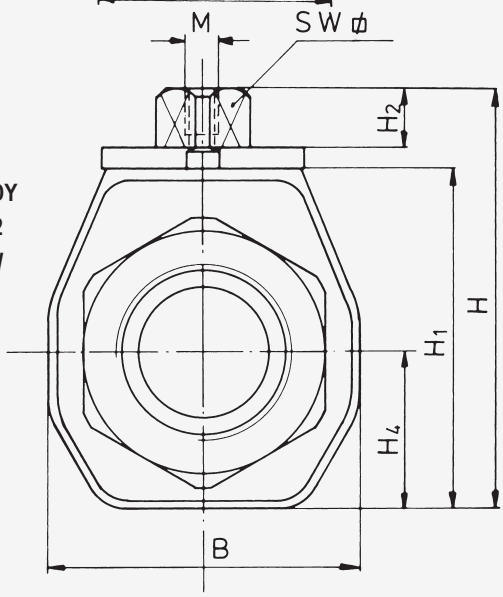

PIRTEK SPBV HIGH PRESSURE BALL VALVES															
"Product Code"	"Body Type"	Nominal Size			"Valve W.P *"	Dimensions mm									
		Dash	BSPP	DN	Bar	LW	L1	L	B	H	H1	H2	H4	SW	M
SPBV-04	Block	04	1/4"	6	500	6	40	69	26	46.5	33	13.5	12	9	M6
SPBV-06	Block	06	3/8"	10	500	10	42	71	33	54	38	16	14.4	9	M6
SPBV-08	Block	08	1/2"	13	500	13	48	82	36	57.5	40	17.5	14.3	9	M6
SPBV-12	Block	12	3/4"	20	400	20	62	96	49	81.5	57	24.5	17.5	14	M6
SPBV-16	Block	16	1"	25	400	25	66	113	58	94.5	65	29.5	17.7	14	M6
SPBV-16G	Forged	16	1"	25	400	24	65	113	58	79.4	63	16	28.2	14	M6
SPBV-20	Block	20	1.1/4"	32	400	25	66	120	58	94.5	65	29.5	17.7	14	M6
SPBV-20A	Forged (Black)	20	1.1/4"	32	400	32	80	110	80	104.4	85.4	18.5	39.5	17	M8
SPBV-20G	Forged	20	1.1/4"	32	400	32	80	110	80	104.4	85.4	18.5	39.5	17	M8
SPBV-24	Forged (Black)	24	1.1/2"	40	400	38	85	120	84	111.4	92.4	18.5	42	17	M8
SPBV-24G	Forged	24	1.1/2"	40	400	38	85	120	84	111.4	92.4	18.5	42	17	M8
SPBV-32	Forged (Black)	32	2"	50	400	47.5	100	140	104	129	110	18.5	52	17	M8
SPBV-32G	Forged	32	2"	50	400	47.5	100	140	104	129	110	18.5	52	17	M8
SPBV-40PL	Forged	40	2.1/2"	63	160	65	122	185	141	172	154	16.4	71	17	-

* Peak permissible pressure is limited by the customers adaptors screwed into the valves.

SHBV

HANDLES TO SUIT HIGH PRESSURE BALL VALVES

Product Code	To suit Product Codes				Material	Dimensions mm		
	Conventional	Stainless Steel	Flanged	3-Way		Valve Stem	L	Offset
SHBV-06	SPBV-04, -06, -08	SSBV-04, -06, -08		STBV-04, -06, -08	Steel Plated	9	110	36
SHBV-16	SPBV-12, -16, -20	SSBV-12, -16	FBVC62-16		Steel Plated	14	165	65
SHBV-24	SPBV-20A/G, -24, -24A/G, -32/G	SSBV-20, -24, -32	FBVC62-20, -24, -32		Zinc alloy	17	280	16

PLEASE NOTE

Zinc alloy handles contain no aluminium and are suited for use in underground coal mines. Steel handles for the same purpose are available to special request. Please contact your nearest Pirtek Centre

SHTV

BUTTERFLY HANDLES TO SUIT BALL VALVES

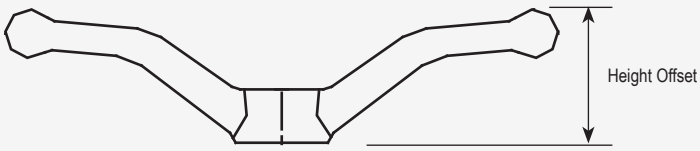

Product Code	To suit Product Codes	Material	Dimensions mm		
			Valve Stem	Width	Height Offset
SHTV-06	SPBV-04, -06, -08 SSBV-04, -06, -08 STBV-04, -06, -08	Zinc alloy	9	116.5	27.8
SHTV-12	SPBV-12, -16, -20 SSBV-12, -16, -20 STBV-12, -16, -20	Zinc Alloy	14	116.5	27.8

* Note: Handle is not compatible with BVPK locking plate.

PIRTEK

This page is part of a complete catalogue containing technical and safety data.
All data must be reviewed when selecting a product.
Pirtek reserve the right to change technical specifications without notice

SKBV
O-RING KITS TO SUIT HIGH PRESSURE BALL VALVES

Kit consists of :- For -04 to -16
2 x Ball seats (POM material)
2 x Adaptor O-rings (NBR material)
1 x Stem O-ring (NBR Material)
1 x Thrust ring (POM material)

IMPORTANT SAFETY NOTE:
Ball Valve overhaul using these kits should be performed by authorised personnel only. Please consult important safety notes concerning ball valves on page 3

Coal Mines Regulations Approval

Product Code	To suit Product Codes	
	Conventional BSPP	Flanged
SKBV-04	SPBV-04	
SKBV-06	SPBV-06	
SKBV-08	SPBV-08	
SKBV-12	SPBV-12	
SKBV-16	SPBV-16, -20	FBVC62-16
SKBV-20	SPBV-20A	FBVC62-20
SKBV-24	SPBV-24	FBVC62-24
SKBV-32	SPBV-32	FBVC62-32

BVPK *(replaces VLP)*
STEEL LOCK PLATES TO SUIT MOST BALL VALVES

Easily fitted locking device for Pirtek ball valves bearing
Product Codes:
SPBV / SSBV / STBV / FBVC62
These lock plates are not compatible with SHTV butterfly handle.
Accomodates 6mm padlock

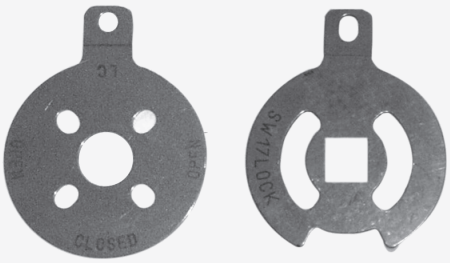

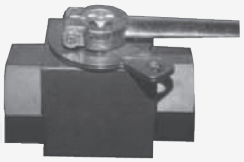

Product Code	Description
BVPK-08	Fits 9mm stem. Suits -04, -06, -08 Ball valves
BVPK-16	Fits 14mm stem. Suits -12, -16, -20 ball valves
BVPK-32	Fits 17mm stem. Suits -20A, -20G, -24, -32 Ball valves

HPBV

HIGH PRESSURE BALL VALVES
LARGE BORE (BODY ONLY)

Description:

- Steel block bodied ball valve
- 3 piece construction
- optional end pieces for DIN or ANSI flanges

Materials and Specifications:

- steel body, stainless steel ball and stem
- Polyamide ball seat
- Perbunan NBR O-rings
- nickel plated or yellow passivated zinc
- Temp. Range -20°C to 100°C with standard seals

Applications:

- general hydraulics
- gas
- environmental engineering
- petrochemical industry

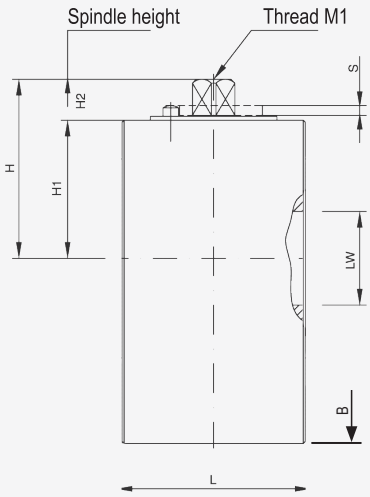

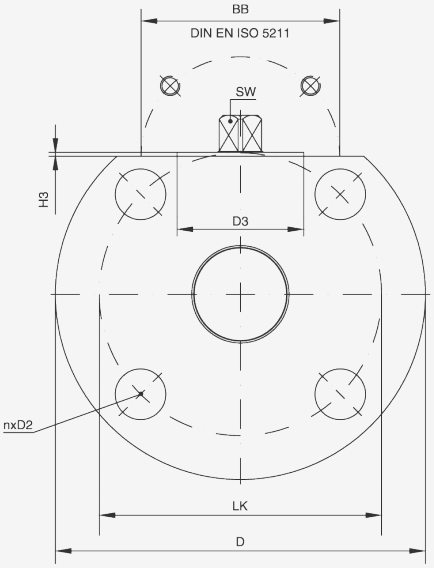

PIRTEK HPBV HIGH PRESSURE LARGE BORE VALVE (BODY ONLY)																
Product Code	Body Type	Surface Finish	Nominal Size			Peak WP	Dimensions mm									
			Dash	Inch	DN	bar	L	B	H	H_1	H_2	H_3	M1	SW	D3	H3
HPBV-63	Forged	Yellow Pass.	40	2.1/2"	65	160	82	218	123	101.5	18.5	5	M8	19	55	2

This page is part of a complete catalogue containing technical and safety data.
All data must be reviewed when selecting a product.
Pirtek reserve the right to change technical specifications without notice

SSBV

HIGH PRESSURE BALL VALVES
STAINLESS STEEL

IMPORTANT SAFETY NOTE: Refer also to the BSPP Thread Table on page 8 when determining the pressure rating of threaded adaptors in combination with SSBV Ball Valves

Description:

- 1.4571 Stainless steel ball valve
- Pressure balanced floating ball between seals ensures a maintenance free life
- Pre-loaded ball seats guarantee tightness even in vacuum
- Stem fitted from within the housing prevents blow-off of the stem

Materials and Specifications:

- SS316Ti steel body, ball, and stem
- Polyamide ball seat
- Perbunan NBR O-ring
- ball seats and seals must be chosen as appropriate to the intended application
- Steel handle for -04 -16 Sizes
- Zinc alloy handles -20 to -32 Sizes
- Temp. Range -20°C to 100°C with standard seals

Applications:

- Chemicals
- Petrochemical
- Environmental technologies
- Offshore
- High pressure cleaning equipment

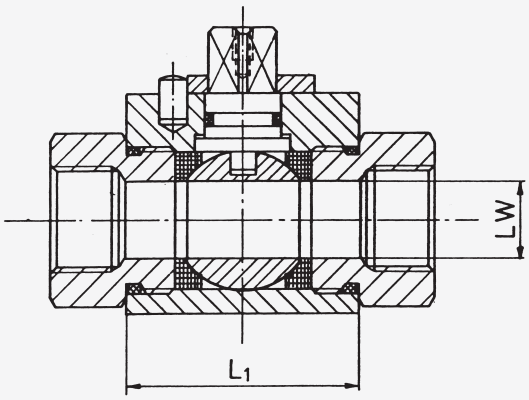

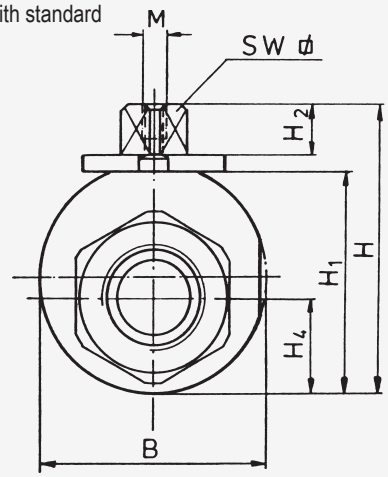

PIRTEK SSBV STAINLESS STEEL BALL VALVES

Product Code	Body Type	Screwed Ends	Nominal Size			Peak WP	Dimensions mm								
		BSPP	Dash	Inch	DN	bar	LW	L1	B	H	H1	H2	H4	M	SW⌀
SSBV-02	Round Bar	1/8”	06	1/8”	4	400	5	36.2	35	43.6	32.2	11	13	M5	9
SSBV-04	Round Bar	1/4”	06	1/4”	6	400	6	36.2	35	43.6	32.2	11	13	M5	9
SSBV-06	Round Bar	3/8”	06	3/8”	10	400	10	43.2	42	49.5	38.25	10.9	16.5	M5	9
SSBV-08	Round Bar	1/2”	08	1/2”	13	400	13	48.2	45	52	40.75	10.9	18	M5	9
SSBV-12	Round Bar	3/4”	12	3/4”	20	350	20	62.2	60	74.4	57.8	16	25.5	M6	14
SSBV-16	Round Bar	1”	16	1”	25	350	24	66.2	65	79.2	62.8	16	28	M6	14
SSBV-20	Round Bar	1.1/4”	20	1.1/4”	32	250 †	32	81.6	90	103	84	18.5	38.1	M8	17
SSBV-24	Round Bar	1.1/2”	24	1.1/2”	32	250 †	38	86.6	100	114.9	95.9	18.5	45.5	M8	17
SSBV-32	Round Bar	2”	32	2”	32	250 †	47.5	101.6	115	129.5	110.5	18.5	52.5	M8	17

† Peak permissible pressure limited by BSPP thread capability

This page is part of a complete catalogue containing technical and safety data.
All data must be reviewed when selecting a product.
Pirtek reserve the right to change technical specifications without notice

FBVC62

HIGH PRESSURE BALL VALVES
SAE CODE 62 FLANGED ENDS

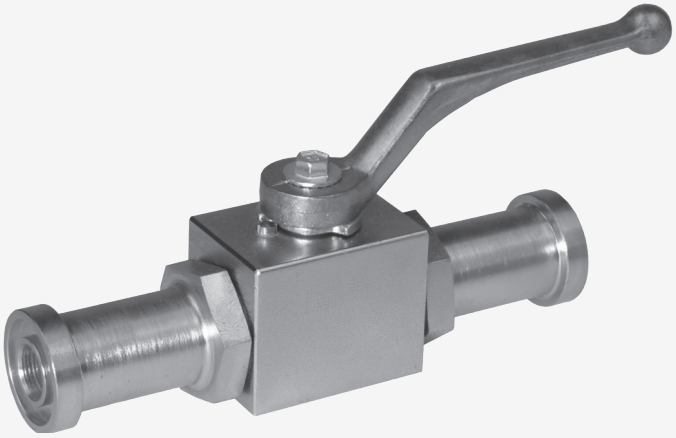

Description:

- Steel bodied ball valve in either block style or forged steel (block style depicted)
- Pressure balanced floating ball between seals ensures a maintenance free life
- Pre-loaded ball seats guarantee tightness even in vacuum
- Stem fitted from within the housing prevents blow-off of the stem

Materials and Specifications:

- Free cutting steel body, ball, seat and stem
- Polyamide ball seat
- Perbunan NBR O-rings
- CR6 free corrosion protection
- Zinc alloy handles
- Temp. Range -20°C to 100°C with standard seals

Applications:

- hydraulics
- ship building
- engineering
- mining
- Special seals may be required in some applications. Please advise if planning an application other than normal hydraulics

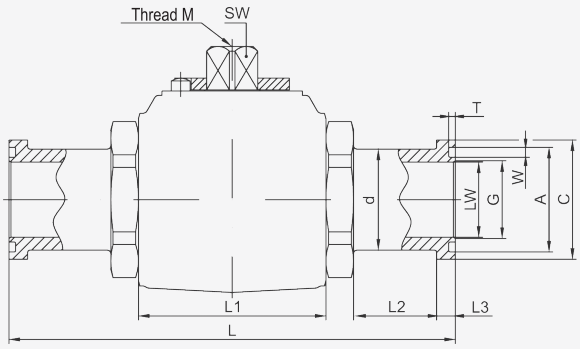

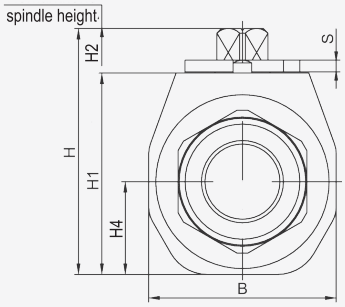

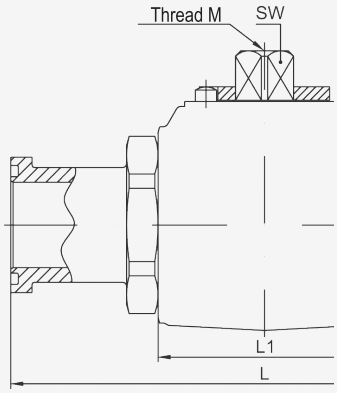

Forged

Block

PIRTEK FPBVC62 HIGH PRESSURE FLANGED BALL VALVES

Product Code	Body Type	Surface Finish	Nominal Size			Peak WP	Dimensions mm																	
			Dash	Inch	DN	bar	LW	L1	B	H	H1	H2	H4	SW	M	S	L	L2	L3	d	C	A	W	T
FBVC62-16	Block	Pass. zinc	16	1”	25	350	24	66.2	60	76.6	60	16	26.5	14	M6	4	199	40	9.5	38	47.6	39.7	4.2	2.8
FBVC62-20	Forged	Pass. zinc	20	1.1/4”	32	400	32	80	80	104	85.4	18.5	39.5	17	M8	5	223	45	10.3	44	54	44.5	4.2	2.8
FBVC62-24	Forged	Pass. zinc	24	1.1/2”	40	400	38	85	84	111	92.4	18.5	42	17	M8	5	281	70	12.6	51	63.5	53.7	4.2	2.8
FBVC62-32	Forged	Pass. zinc	32	2”	50	400	47.5	100	104	129	110	18.5	52	17	M8	5	316	80	12.6	67	79.4	63.3	4.2	2.8

This page is part of a complete catalogue containing technical and safety data.
All data must be reviewed when selecting a product.
Pirtek reserve the right to change technical specifications without notice

STBV

HIGH PRESSURE BALL VALVES

3-WAY

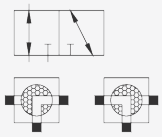

L-bore 0^0-90^0
(standard)

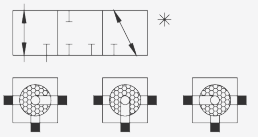

L-bore (positive overlap) 0^0-90^0-180^0
✳ Only the 3rd port can be pressurised in the middle position

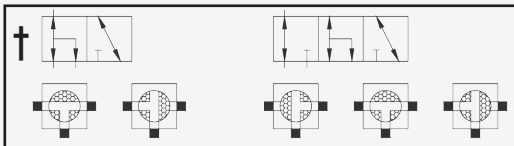

T-bore 0^0-90^0 T-bore 0^0-90^0-180^0

Description:

- Pressure balanced floating ball between seals ensures a maintenance free life
- Pre-loaded ball seats guarantee tightness even in vacuum (see applications note)
- Stem fitted from within the housing prevents blow-off of the stem
- L pattern standard

† T Pattern Available to special order

- Comes with mounting holes
  - 04 = 4.5mm
  - 06 through -16 = 6.5mm

Materials and Specifications:

- Steel body, ball, and stem
- POM (Derlin ®) ball seat
- Surface treatment: Zinc plating Cr3 Silver
- NBR O-ring
- ball seats and seals must be chosen as appropriate to the intended application
- Steel handle
- Temp. Range -20°C to 120°C with standard seals

Applications:

- general hydraulics
- construction & agriculture
- mining
- the third port cannot be closed
- *the blocked port pressure must be zero or at least lower than the other ports for sealing to be effective*

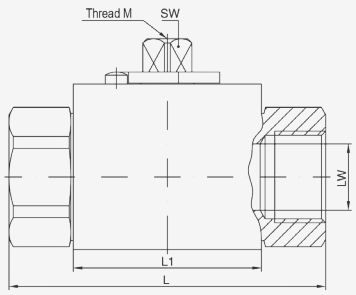

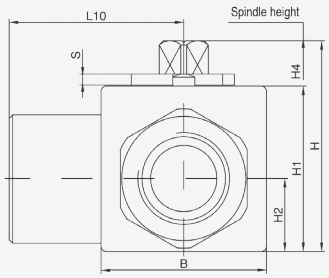

Product Code	Bore Pattern	Body Type	Screwed Ends	Nominal Size			Peak W.P	DIMENSIONS mm											
			BSPP	Dash	Inch	DN	Bar	L	L1	LW	L10	B	H	H1	H2	H4	S	SW	M
STBV-04	L	Block	1/4"	04	1/4"	6	500	69	40	6	35	29	45	33	13	12	3	9	M6
STBV-06	L	Block	3/8"	06	3/8"	10	500	71	42	10	36	35	52	38	17	14.5	4.2	9	M6
STBV-08	L	Block	1/2"	08	1/2"	13	500	82	48	13	41	38	53.6	40	18.5	14	3	9	M6
STBV-12	L	Block	3/4"	12	3/4"	20	400	95.5	62	20	47	52	74	57	25	17.5	4.7	14	M6
STBV-16	L	Block	1"	16	1"	25	400	113	66	25	56	61	82.5	65	30	17.6	4.4	14	M6

PIRTEK

This page is part of a complete catalogue containing technical and safety data.
All data must be reviewed when selecting a product.
Pirtek reserve the right to change technical specifications without notice

FLOW RATES

HIGH PRESSURE BALL VALVES

All Pirtek ball valves are full flow designs. A ball valve should never be used as a flow regulating device - ie it should always be either fully open or fully closed.
As such, a ball valve can be treated as simply part of the conduit in which it is installed.
It is common practice to treat hydraulic components such as ball valves as an equivalent length of straight pipe to allow for turbulence associated with entrance and exit losses.

Catalogue Section E (pages E2 through E6) details recommended flow velocities for a wide range of hydraulic conduits, but the flow nomograph (Fig.1) and selector graph (Fig. 2) below may be helpful for less rigorous assessments.
For information concerning the empirical formulae and design charts that form the basis of hydraulic flow theory, the reader is referred to Pirtek Technical Catalogue Section Q

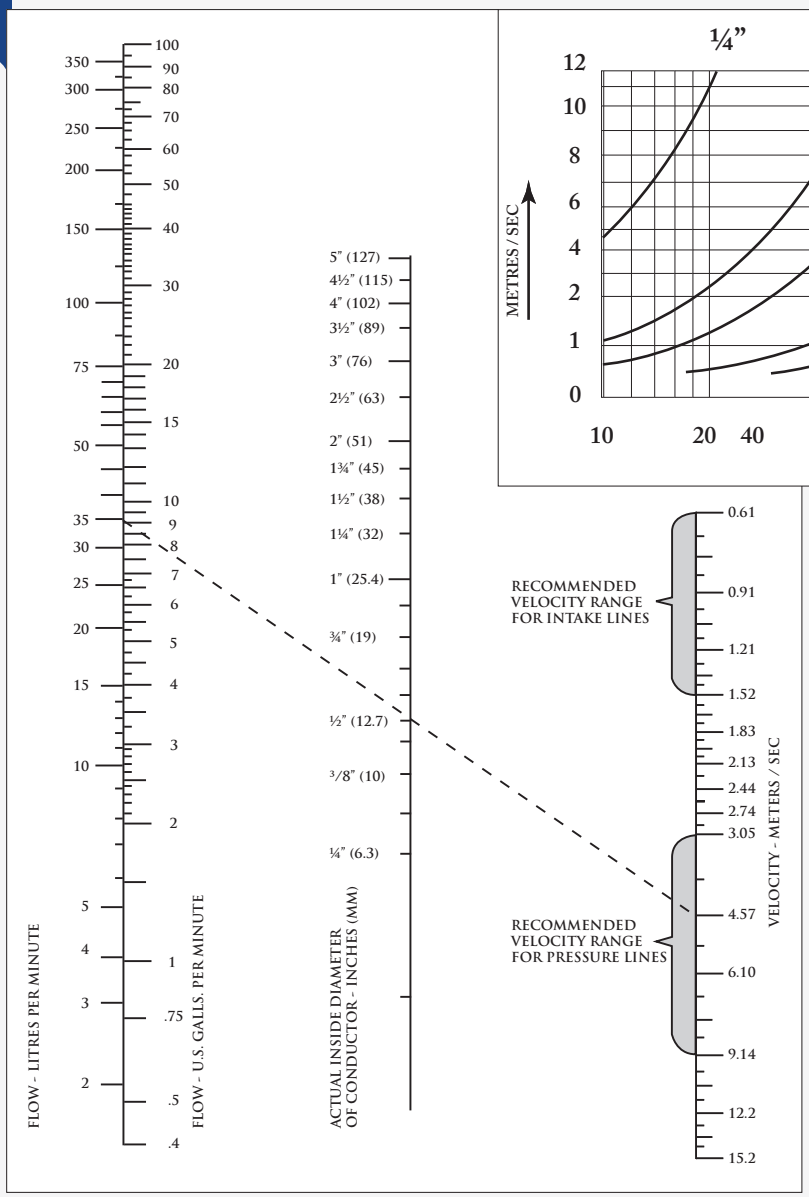

Fig.1 Flow Nomograph

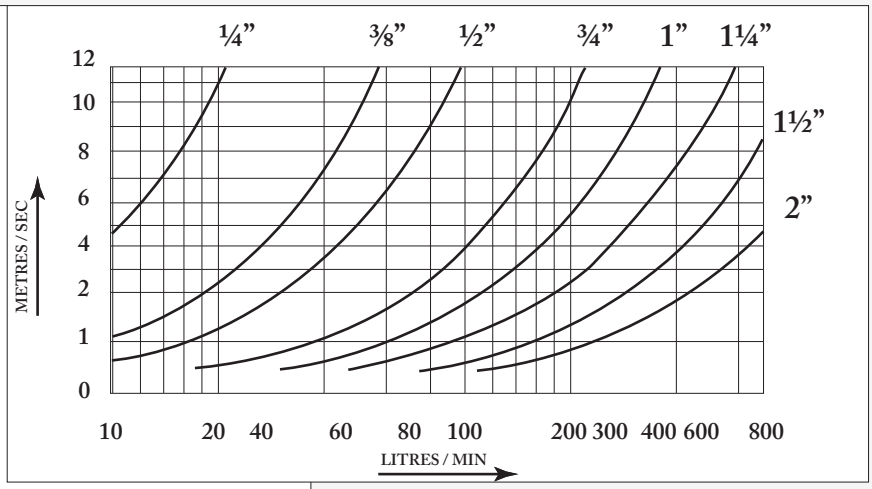

Fig. 2 Ball Valve Selector

Component	Loss coefficient K	L/D
Ball Valve fully open	0.05	1.75
Globe Valve fully open	10	350
Tee, through side outlet	2	70
Tee (Run)	0.9	31.5
Elbow - medium radius	1.5	52.5
Elbow - long radius	0.7	24.5
Elbow 45°	0.4	14

Minor pressure loss in pipe and tube systems can be expressed as:

$h_{minor_loss} = K * v^2 / (2 * g)$

Where:

h_{minor_loss} = minor head loss (m)

K = minor loss coefficient (dimension-less)

v = flow velocity (m/s)

g = acceleration of gravity (m/s^2) - use 9.806 m/s^2

The ratio L/D is used where the designer wishes to express the losses as an equivalent length of pipe. Multiply the tabulated L/D ratio by the internal diameter of the component to determine the equivalent length of conduit that the component represents

PIRTEK

This page is part of a complete catalogue containing technical and safety data.
All data must be reviewed when selecting a product.
Pirtek reserve the right to change technical specifications without notice

The functional requirements of a hydraulic system will determine whether the system needs to be closed or open (with or without a valve or connection to external componentry).

In the case of open systems, the external connection is often accomplished by means of quick disconnect couplings.

Many solutions have been developed to meet specific system requirements. Some typical problems that may need to be addressed when choosing a coupling include:

- Fluid loss when connecting / disconnecting
- Severe impulses and vibrations
- Danger of system contamination
- Difficulty in connecting / disconnecting due to residual pressures.
- System sensitivity to pressure losses by way of flow restrictions
- A need for some swivel capability in the coupling when depressurised
- Development of pressure on either or both sides of a coupling, even when disconnected.

Added to these are the more common considerations such as:

- Fluid compatibility with seals and componentry
- Physical compatibility between the male and female couplers. (Pirtek do not recommend mixing couplers of different manufacturers, or even of different age, due to potential malfunction caused by spring pressure variations, wear etc.)
- Operating pressures and temperatures.
- Type of valve (poppet or ball). A poppet type uses a machined, self aligning valve that incorporates an elastomer to provide a positive seal upon disconnection, with no low pressure leakage, and generally providing a higher flow capability than a ball type. The ball type by contrast uses a metal to metal seal that is simple, rugged, and resistant to seat damage through contamination.
- Protective plugs / caps are recommended in plug or screw form (depending on type), to minimise system contamination.

6602P 18
Steel push-pull breakaway coupling to ISO-A Standard. 1/2" only.

4000 19
Widely popular steel coupling commonly known as agricultural interchange.

60A / 6600 20
ISO 7241-A steel coupler with NPT / BSPP thread.

60B 21
ISO 7241-B industrial interchange steel coupler with NPT thread.

F6600 22
ISO 7241-B industrial interchange steel coupler with BSPP thread.

7000 / 7200 / 7400 / 7500 / 7600 23-24
Flat face steel coupling with BSP, NPT, UN-O, ORFS threads. Low spillage & contamination.

8000 / 8200 25-26
Screw to connect steel coupler with BSPP thread. Resists vibration.

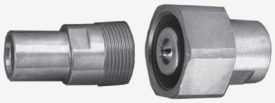

9000/9500 27-28
Full flow coupling suited to trucking and hydraulic equipment applications

3000 / 3200 29
Screw to connect steel coupler with NPT thread. For hydraulic tools.

DQC 30
Diagnostic quick couplings
ISO 15171-1, SAE J1502 Interchange

2000 31
Steel bodied inline check valve with BSPP thread.

SJ 32
Steel bodied swivel joints to reduce twist in hose assemblies. BSPP threads.

6602P SERIES

Agricultural Push-Pull Coupler Poppet Type

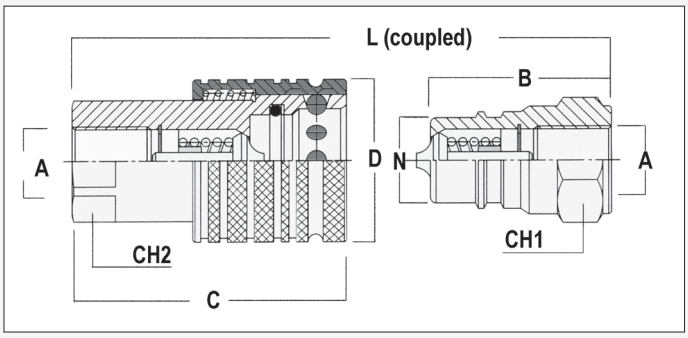

Steel construction
Poppet valve and plug from hardened steel
Allows easy one hand connect / disconnect
Facilitates panel mounting
Safety break away feature when correctly mounted
Nitrile seals with Teflon backup rings
Protective PVC caps and plugs available
-20 ° C to +110 ° C temperature range
Conforms to ISO 7241-A and ISO 5675 specifications

Widely used on tractors and agricultural implements

Quick release couplings are not intended to be used in hammer applications.

Product Code						Size Base	DN	A BSPP	B	C	Ø D	L	CH1	CH2	Ø N
Male Tip	Female Body	Valve Type	Seal Kit	Cap for Tip	Plug for Body	Dash	mm	ins	mm	mm	mm	mm	mm	mm	mm
6601-08	6602P-08	Poppet	6609-08	6603-08	6604-08	08	12	1/2"	46	67	38	92	27	24	20.5

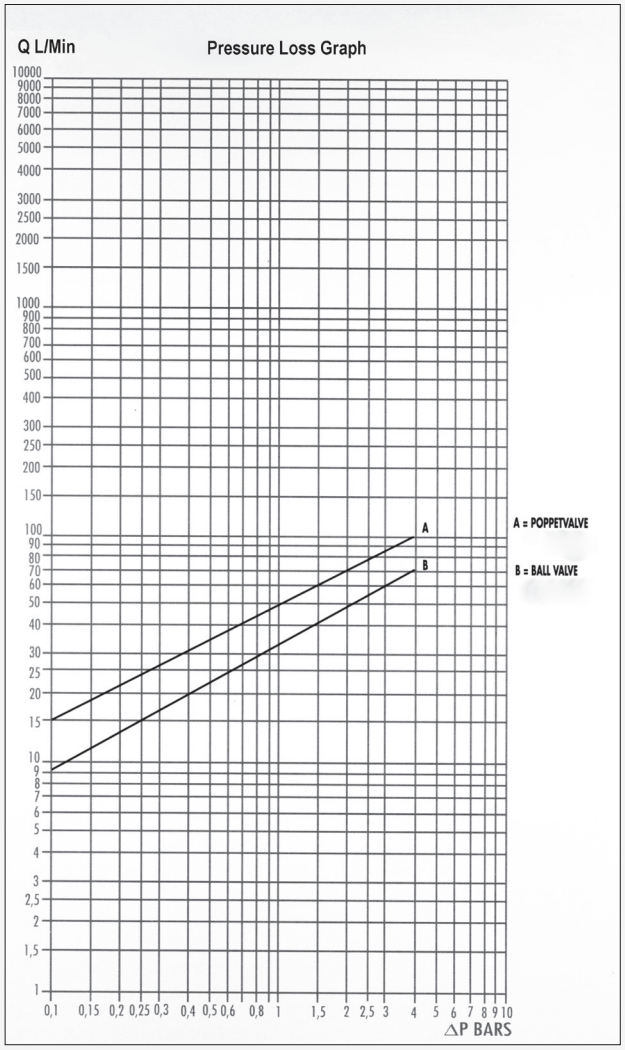

			Pressure Rating	
Size Base	DN	BSPP	Working	Burst
Dash	mm	ins	bar	bar
08	12	1/2"	250	1000

Pressure Loss as determined with hydraulic oil of:
SAE 10W
Temp: 50°C
Viscosity : 3E°

PIRTEK

This page is part of a complete catalogue containing technical and safety data.
All data must be reviewed when selecting a product.
Pirtek reserve the right to change technical specifications without notice

4000 SERIES

Agricultural Interchange Couplers
Poppet and Ball Types

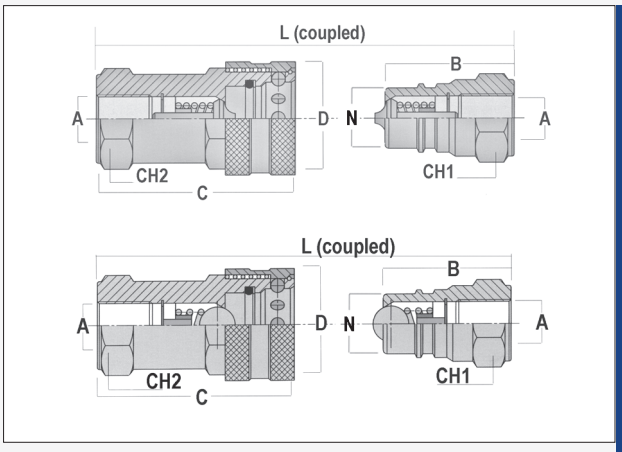

Steel construction
Induction hardened plugs
Internal valving from hardened steel
Nitrile seals with Teflon backup rings
Protective PVC caps and plugs available
-20 ° C to +110 ° C temperature range
Note that the 1/2" sizes conform to ISO 7241-A specifications, and are included here for the convenience of the reader. Refer to Pirtek Series 6600 for complete specifications.
A push-pull coupler is also available in 1/2" size. See 6602P Series.

Quick release couplings are not intended to be used in hammer applications.

Product Code						Size Base	DN	Thread A BSPP	B	C	Ø D	L	CH1	CH2	Ø N
Male Tip	Female Body	Valve Type	Seal Kit	Cap for Tip	Plug for Body	Dash	mm	ins	mm	mm	mm	mm	mm	mm	mm
4001-04	4002-04	Poppet	4009-04	4003-04	4004-04	04	6	1/4"	35	52	27	70.5	19	21	14.1
4001-06	4002-06	Poppet	4009-06	4003-06	4004-06	06	10	3/8"	39	60.5	31	79.5	22	24	19.0
4001B-06	4002B-06	Ball	4009-06	4003-06	4004-06	06	10	3/8"	39	60.5	31	79.5	22	24	19.0
6601-08	6602-08	Poppet	6609-08	6603-08	6604-08	08	12	1/2"	46	67.5	38	92	27	30	20.5
6601B-08	6602B-08	Ball	6609-08	6603-08	6604-08	08	12	1/2"	46	67.5	38	92	27	30	20.5
4001-12	4002-12	Poppet	4009-12	4003-12	4004-12	12	20	3/4"	46	67.5	38	92	27	30	28.0
4001B-12	4002B-12	Ball	4009-12	4003-12	4004-12	12	20	3/4"	53	82	46	106	34	38	28.0
4001-16	4002-16	Poppet	4009-16	4003-16	4004-16	16	25	1"	58	95	55	120	41	45	31.2

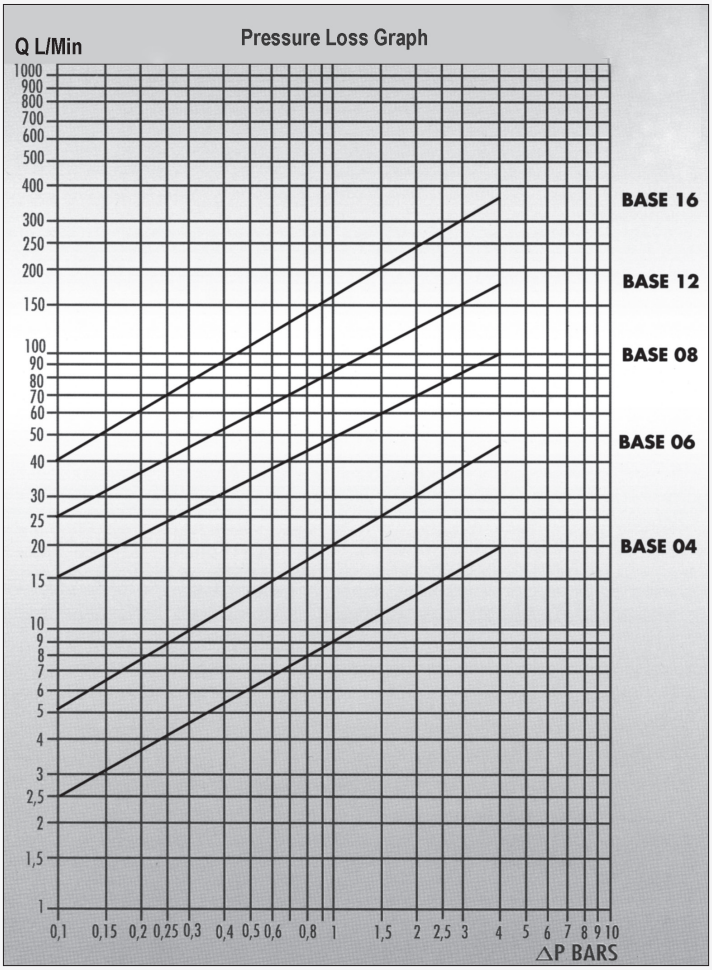

			Pressure Rating	
Size Base	DN	BSPP	Working	Burst
Dash	mm	ins	bar	bar
04	6	1/4"	350	1400
06	10	3/8"	315	1260
08	12	1/2"	250	1000
12	20	3/4"	250	1000
16	25	1"	230	920

Pressure Loss as determined with hydraulic oil of:
SAE 10W
Temp: 50°C
Viscosity : 3E°

6600 / 60A SERIES

ISO 7241-A Couplers
Poppet and Ball Types

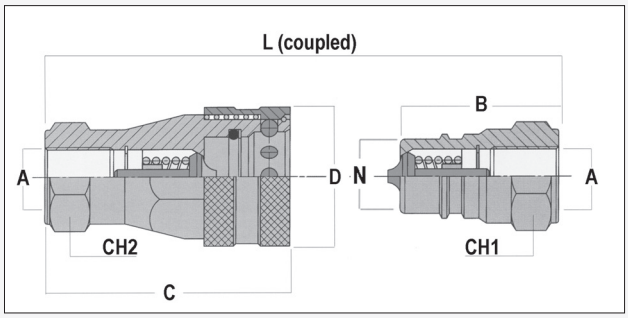

Steel construction
Induction hardened plugs
Internal valving from hardened steel
Nitrile seals with Teflon backup rings
Protective PVC caps and plugs available
-20 ° C to +110 ° C temperature range
Conforms to ISO 7241-A Standard
Note that the 1/2" size is common to the Agricultural Interchange Series 4000 couplers.
Please refer there for a schematic of the ball type coupling.

Quick release couplings are not intended to be used in hammer applications.

Product Code						Size Base	DN	**BSPP**	B	C	ØD	L	CH1	CH2	ØN
Male Tip	Female Body	Valve Type	Seal Kit	Cap for Tip	Plug for Body	Dash	mm	ins	mm	mm	mm	mm	mm	mm	mm
6601-04	**6602-04**	Poppet	**6609-04**	**6603-04**	**6604-04**	04	6	1/4"	35	47	25	71	19	19	11.8
6601-06	**6602-06**	Poppet	**6609-06**	**6603-06**	**6604-06**	06	10	3/8"	39	58	31	79.5	22	24	17.3
6601-08	**6602-08**	Poppet	**6609-08**	**6603-08**	**6604-08**	08	12	1/2"	46	67.5	38	92	27	30	20.5
6601B-08	**6602B-08**	Ball	**6609-08**	**6603-08**	**6604-08**	08	12	1/2"	46	67.5	38	92	27	30	20.5
6601-12	**6602-12**	Poppet	**6609-12**	**6603-12**	**6604-12**	12	20	3/4"	54	81	46	108	34	38	29.1
6601-16	**6602-16**	Poppet	**6609-16**	**6603-16**	**6604-16**	16	25	1"	62	96	55	124	41	45	34.3
6601-20	**6602-20**	Poppet		**6603-20**	**6604-20**	20	32	1-1/4"	75	117	65	151	55	50	45.0
6601-24 †	**6602-24**	Poppet				24	38	1-1/2"	85	135	80	171	60	60	55.0
6601-32 †	**6602-32**	Poppet				32	50	2"	100	160	100	201	75	75	65.0

Product Code						Size Base	DN	**NPT**	B	C	ØD	L	CH1	CH2	ØN
Male Tip	Female Body	Valve Type	Seal Kit	Cap for Tip	Plug for Body	Dash	mm	ins	mm	mm	mm	mm	mm	mm	mm
60A1-08	**60A2-08**	Poppet	**6609-08**	**6603-08**	**6604-08**	08	12	1/2"	46	67.5	38	92	27	30	20.5

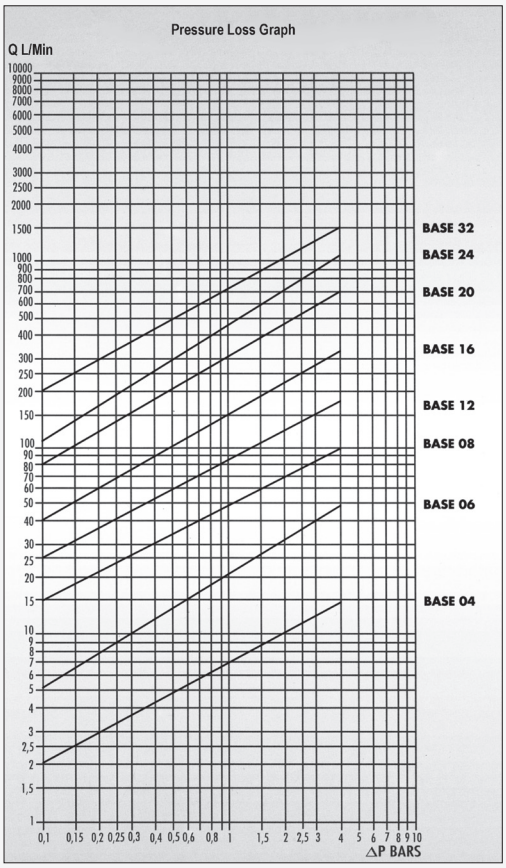

			Pressure Rating	
Size Base	**DN**	**BSPP/NPT**	**Working**	**Burst**
Dash	**mm**	**ins**	**bar**	**bar**
04	6	1/4"	350	1400
06	10	3/8"	315	1260
08	12	1/2"	250	1000
12	20	3/4"	250	1000
16	25	1"	230	920
20	32	1-1/4"	230	920
24 †	38	1-1/2"	190	760
32 †	50	2"	130	520

† These sizes available to order.

Pressure Loss as determined with hydraulic oil of:
SAE 10W
Temp: 50°C
Viscosity : 3E°

PIRTEK
This page is part of a complete catalogue containing technical and safety data.
All data must be reviewed when selecting a product.
Pirtek reserve the right to change technical specifications without notice

60B SERIES

ISO7241-B NPT Threads
Industrial Interchange Couplers -Poppet Type

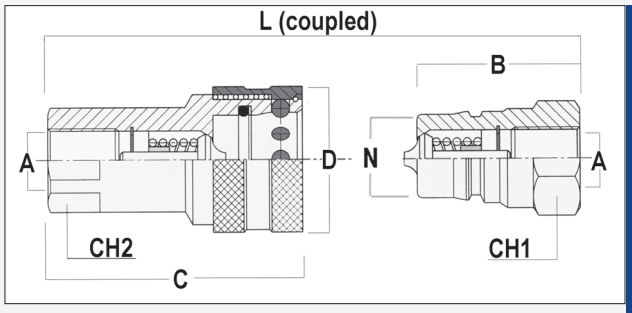

Steel construction
Induction hardened plugs
Internal valving from hardened steel
Nitrile seals with Teflon backup rings
Protective PVC caps and plugs available
-20 ° C to +110 ° C temperature range
Conforms to ISO 7241-B Standard

Quick release couplings are not intended to be used in hammer applications.

Product Code						Size Base	DN	NPT	B	C	Ø D	L	CH1	CH2	Ø N
Male Tip	Female Body	Valve Type	Seal Kit	Cap for Tip	Plug for Body		mm	ins	mm	mm	mm	mm	mm	mm	mm
60B1-04	60B2-04	Poppet	60B9-04	60B3-04	60B4-04	04	6	1/4"	35	57	27	70.5	19	19	14.2
60B1-06	60B2-06	Poppet	60B9-06	60B3-06	60B4-06	06	10	3/8"	41	66	34	82.5	24	24	19.1
60B1-08	60B2-08	Poppet	60B9-08	60B3-08	60B4-08	08	12	1/2"	46	74	42	92.5	27	27	23.5
60B1-12	60B2-12	Poppet	60B9-12	60B3-12	60B4-12	12	20	3/4"	55	90	50	111	36	36	31.4
60B1-16	60B2-16	Poppet	60B9-16	60B3-16	60B4-16	16	25	1"	66	106	60	133	41	41	37.7

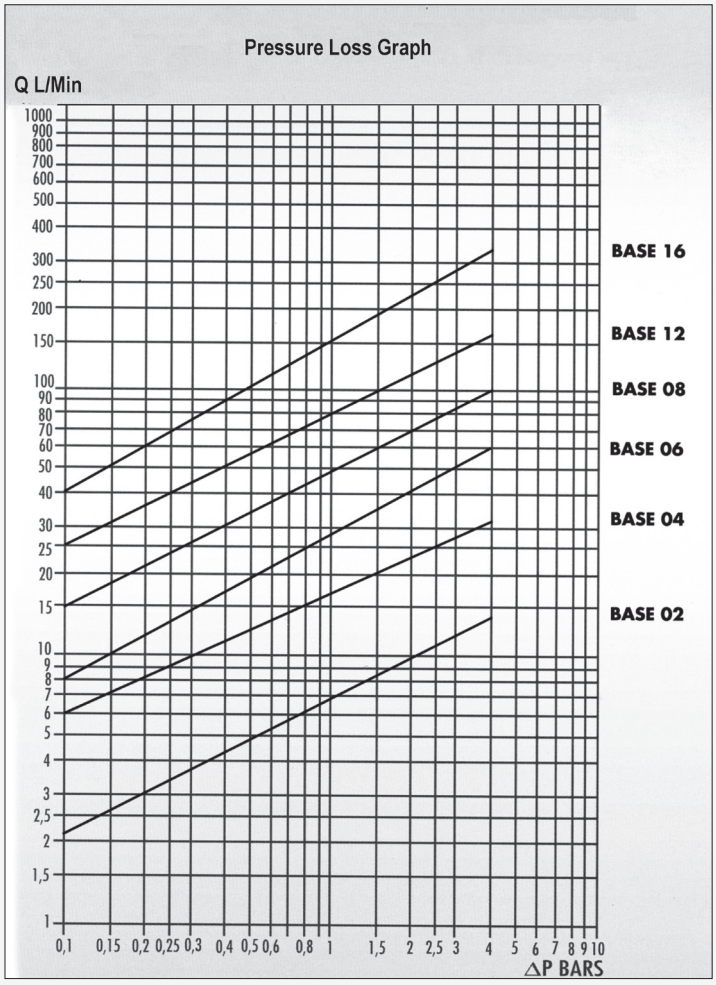

			Pressure Rating	
Size Base	DN	NPT	Working	Burst
Dash	mm	ins	bar	bar
04	6	1/4"	350	1400
06	10	3/8"	300	1200
08	12	1/2"	280	1120
12	20	3/4"	180	720
16	25	1"	150	600

Pressure Loss as determined with hydraulic oil of:
SAE 10W
Temp: 50°C
Viscosity : 3E°

F6600 SERIES

ISO7241-B BSPP Threads
Industrial Interchange Couplers -Poppet Type

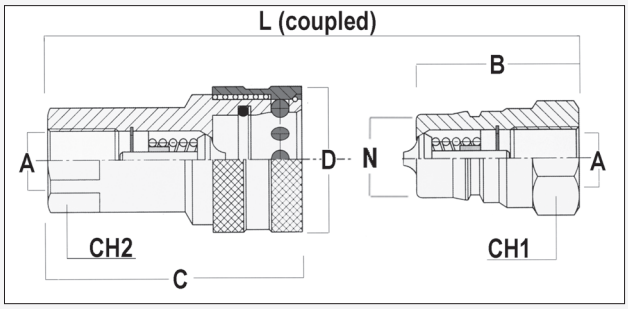

Steel construction
Induction hardened plugs
Internal valving from hardened steel
Nitrile seals with Teflon backup rings
Protective PVC caps and plugs available
-20 ° C to +110 ° C temperature range
Conforms to ISO 7241-B Standard
Quick release couplings are not intended to be used in hammer applications.

Product Code						Size Base	DN	A BSPP	B	C	Ø D	L	CH1	CH2	Ø N
Male Tip	Female Body	Valve Type	Seal Kit	Cap for Tip	Plug for Body		mm	ins	mm	mm	mm	mm	mm	mm	mm
F6601-02	F6602-02	Poppet				02	3	1/8"	30	49	24	60.5	14	14	10.8
F6601-04	F6602-04	Poppet	60B9-04	60B3-04	60B4-04	04	6	1/4"	35	57	27	70.5	19	19	14.2
F6601-06	F6602-06	Poppet	60B9-06	60B3-06	60B4-06	06	10	3/8"	41	66	34	82.5	24	24	19.1
F6601-08	F6602-08	Poppet	60B9-08	60B3-08	60B4-08	08	12	1/2"	46	74	42	92.5	27	27	23.5
F6601-12	F6602-12	Poppet	60B9-12	60B3-12	60B4-12	12	20	3/4"	55	90	50	111	36	36	31.4
F6601-16	F6602-16	Poppet	60B9-16	60B3-16	60B4-16	16	25	1"	66	106	60	133	41	41	37.7

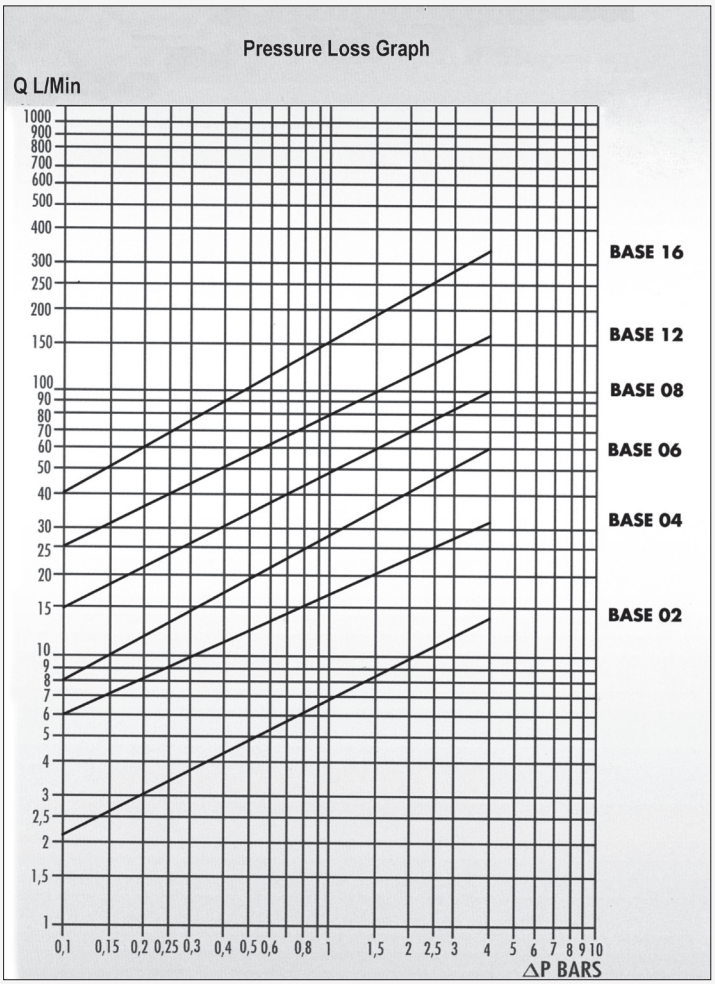

			Pressure Rating	
Size Base	DN	BSPP	Working	Burst
Dash	mm	ins	bar	bar
02	3	1/8"	350	1400
04	6	1/4"	350	1400
06	10	3/8"	300	1200
08	12	1/2"	280	1120
12	20	3/4"	180	720
16	25	1"	150	600

Pressure Loss as determined with hydraulic oil of:
SAE 10W
Temp: 50°C
Viscosity : 3E°

PIRTEK
This page is part of a complete catalogue containing technical and safety data.
All data must be reviewed when selecting a product.
Pirtek reserve the right to change technical specifications without notice

7000 / 7500 SERIES

Flat Face Couplers ISO 16028

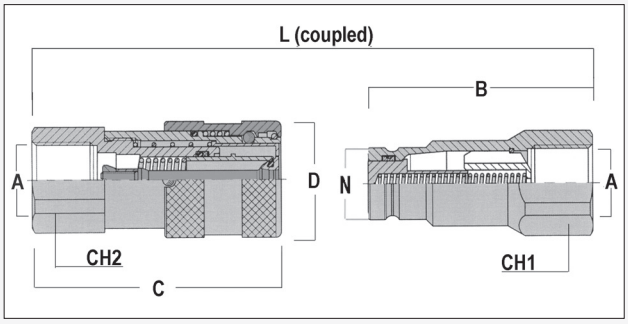

Low spillage when coupling / uncoupling
Perfect sealing when coupled or uncoupled
Air inclusion during coupling / uncoupling is eliminated
Easy cleaning of the flat faces
Safety sleeve prevents accidental disconnection
Nitrile seals with Teflon anti-extrusion rings
Protective PVC caps and plugs available
-20 ° C to +110 ° C temperature range
Size DN9 conforms to and interchanges with the HTMA design
The ideal choice for heavy duty applications involving high pressures or difficult environments. The 7500 Series is common on Bobcat ® equipment.

Quick release couplings are not intended to be used in hammer applications.

Product Code						Body Size	ISO DN	A BSPP	B	C	ØD	L	CH1	CH2	ØN
Male Tip	Female Body	Valve Type	Seal Kit	Cap for Tip	Plug for Body		mm	ins	mm	mm	mm	mm	mm	mm	mm
7001-04	7002-04	Flat Face	N/A	7003-04	7004-04	04	7	1/4"	48	48	28	85.5	22	22	16.1
7001-06	7002-06	Flat Face	N/A	7003-06	7004-06	06	9	3/8"	60	64.5	32	109	24	27	19.7
7001-0608	7002-0608	Flat Face	N/A	7003-0608	7004-0608	06	9	1/2"	62.5	69.5	32	117	27	27	19.7
7001-08	7002-08	Flat Face	N/A	7003-08	7004-08	08	13	1/2"	68	73.5	38	125	32	32	24.5
7001-12	7002-12	Flat Face	N/A	7003-12	7004-12	12	15	3/4"	70.5	78	42	132	36	36	27.0
7001-16	7002-16	Flat Face	N/A	7003-16	7004-16	16	17	1"	82.5	92.5	48	154	45	45	30.0
7001-20	7002-20	Flat Face	N/A	7003-20	7004-20	20	21	1-1/4"	90	105	55	173	55	55	36.0
7001-24 †	7002-24 †	Flat Face	N/A	7003-24 †	7004-24 †	24	30	1-1/2"	111	133	80	215	70	65	57.0
7001-32 †	7002-32 †	Flat Face	N/A	7003-32 †	7004-32 †	32	45	2"	125	165	100	250	75	80	73.0
								NPT							
7401-08	7402-08	Flat Face	N/A	7003-08	7004-08	08	13	1/2"	68	73.5	38	125	32	32	24.5
7401-12	7402-12	Flat Face	N/A	7003-12	7004-12	12	15	3/4"	70.5	78	42	132	36	36	27.0
								UN-O							
7501-0604	7502-0604	Flat Face	N/A	7003-04	7004-04	04	7	9/16"-18	48	48	28	85.5	22	22	16.1
7501-1008	7502-1008	Flat Face	N/A	7003-08	7004-08	08	13	7/8" - 14	68	73.5	38	125	32	32	24.5
7501-1208	7502-1208	Flat Face	N/A	7003-08	7004-08	08	13	1-1/16"-12	68	73.5	38	125	32	32	24.5
7501-1212	7502-1212	Flat Face	N/A	7003-12	7004-12	12	15	1-1/16"-12	70.5	78	42	132	36	36	27.0

† Available to special order

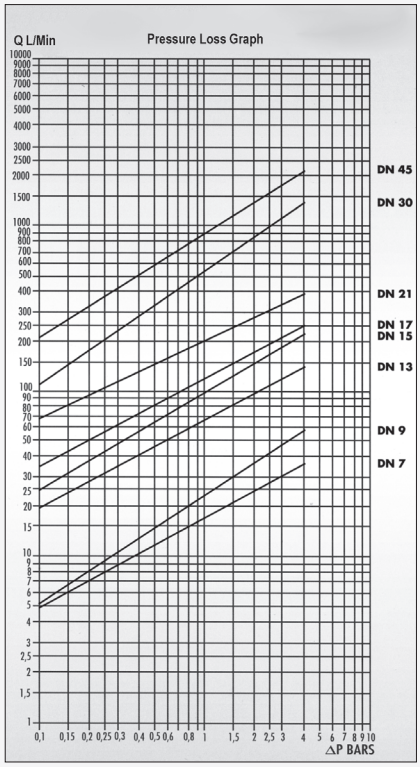

Body Size	DN	Pressure Rating WP bar	Pressure Rating Burst bar
04	7	300	1200
06	9	300	1200
08	13	250	1000
12	15	250	1000
16	17	250	850
20	21	250	850
24	30	200	700
32	45	180	700

Pressure Loss as determined with hydraulic oil of:
SAE 10W
Temp: 50°C
Viscosity : 3E°

This page is part of a complete catalogue containing technical and safety data.
All data must be reviewed when selecting a product.
Pirtek reserve the right to change technical specifications without notice

7200 / 7600 SERIES

Flat Face Couplers ISO 16028
High Pressure Type

Low spillage when coupling / uncoupling
Perfect sealing when coupled or uncoupled
Air inclusion during coupling / uncoupling is eliminated
Easy cleaning of the flat faces
Safety sleeve prevents accidental disconnection
Nitrile seals with Teflon anti-extrusion rings
Protective PVC caps and plugs available
-20 ° C to +110 ° C temperature range
Interchangeable with the 7000 Series but with a higher working pressure.
The ideal choice for heavy duty mobile applications involving high pressures or difficult environments.
7201 Series male tip/ probe only can be connected with back pressure up to 200 bar. Not for 1.1/4" (-20) Size.
7600 series common on Catapiller ® Skid Steer loaders.

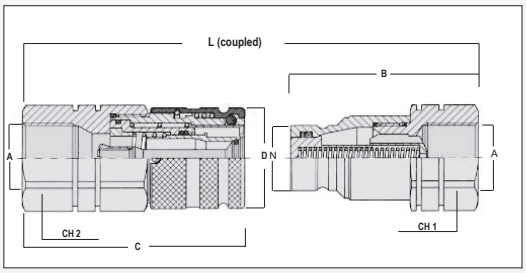

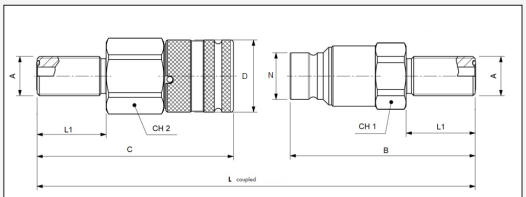

7600 SERIES BULKHEAD

* Locking nut sold separately, part number FF1332-10

Quick release couplings are not intended to be used in hammer applications.

Product Code						Body Size	ISO DN	A BSPP	B	C	ØD	L	CH1	CH2	ØN	L1
Male Tip	Female Body	Valve Type	Seal Kit	Cap for Tip	Plug for Body		mm	ins	mm	mm	mm	mm	mm	mm	mm	mm
7201-06	7202-06	Flat Face	N/A	7003-06	7004-06	06	9	3/8"	60	64.5	32	109	27	30	19.7	
7201-08	7202-08	Flat Face	N/A	7003-08	7004-08	08	13	1/2"	68	76.5	38	127.5	36	36	24.5	
7201-12	7202-12	Flat Face	N/A	7003-12	7004-12	12	15	3/4"	73	83.5	42	139.5	36	41	27	
7201-16	7202-16	Flat Face	N/A	7003-16	7004-16	16	17	1"	84	98.5	48	161	46	46	30	
7201-20	7202-20	Flat Face	N/A	7003-20	7004-20	20	21	1.1/4"	90	105	55	173	55	55	36	
								ORFS								
7601-0810BH	7602-0810BH	Flat Face	N/A	7003-08	7004-08	08	13	1"-14	93	96	38	171.7	32	36	24.5	33

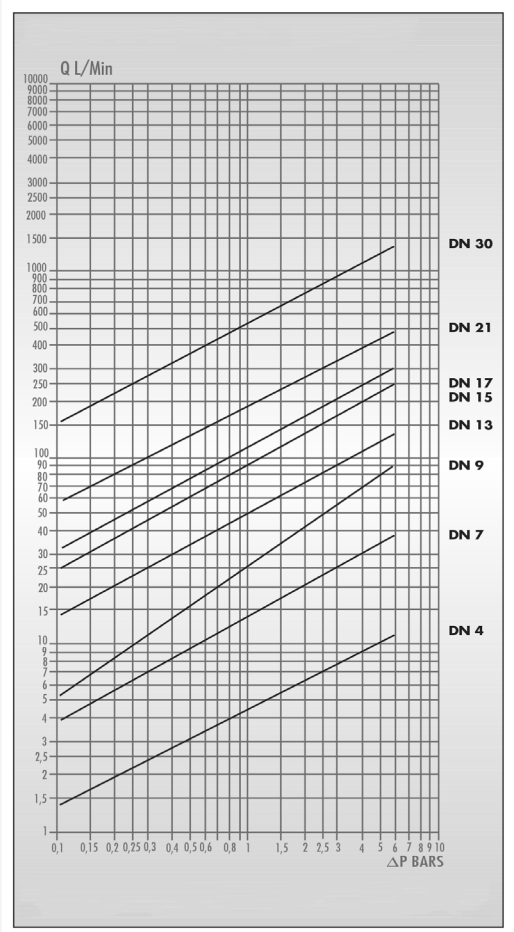

Body Size	DN	Pressure Rating WP bar	Pressure Rating Burst bar	Force to Connect kgs
06	9	375	1100	21
08	13	350	1100	23.2
12	15	350	1100	18
16	17	350	1100	22
20	21	350	1100	35

Pressure Loss as determined with hydraulic oil of :-
SAE 10W
Temp: 50°C
Viscosity : 3E°

PIRTEK

This page is part of a complete catalogue containing technical and safety data.
All data must be reviewed when selecting a product.
Pirtek reserve the right to change technical specifications without notice

8000 SERIES

Screw to Connect Couplers
Heavy Duty Type - Connect Under Pressure

Steel construction
Internal valving from hardened steel
Nitrile seals with Teflon backup rings
Protective metal caps and plugs available
-20 ° C to +110 ° C temperature range
Commonly used in heavy duty applicatiions involving
high pressures, vibrations and mechanical stresses.
NOTE: Can be connected under pressure up to 3000 psi (207 Bar)
Quick release couplings are not intended to be used in hammer applications.

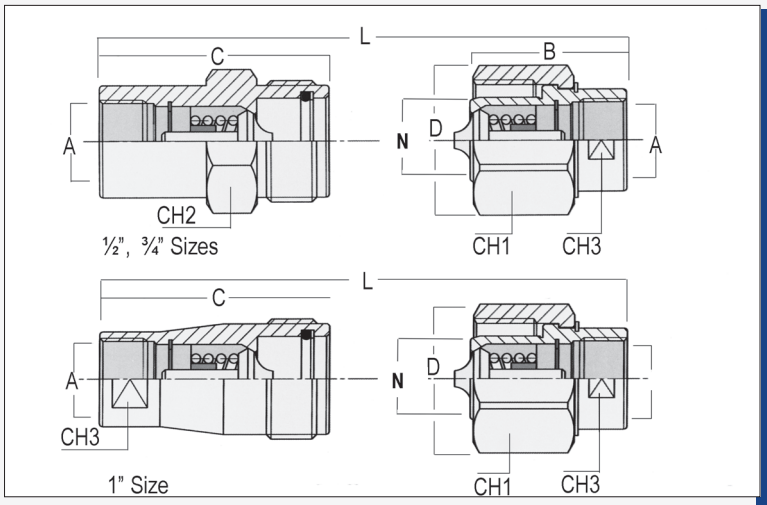

Product Code					Size Base	DN	BSPP	B	C	ØD	L	CH1	CH2	CH3	ØN
Male Tip	Female Body	Valve Type	Cap for Tip	Plug for Body		mm	ins	mm	mm	mm	mm	mm	mm	mm	mm
8001-08	**8002-08**	Poppet	**8003-08**	**8004-08**	08	12	1/2"	55	75	47	100	42	38	27	23.9
8001-12	**8002-12**	Poppet	**8003-12**	**8004-12**	12	20	3/4"	61	90	56	114	50	42	30	25.9
8001-16	**8002-16**	Poppet	**8003-16**	**8004-16**	16	25	1"	61	88	67	120	60	45	40	34.9

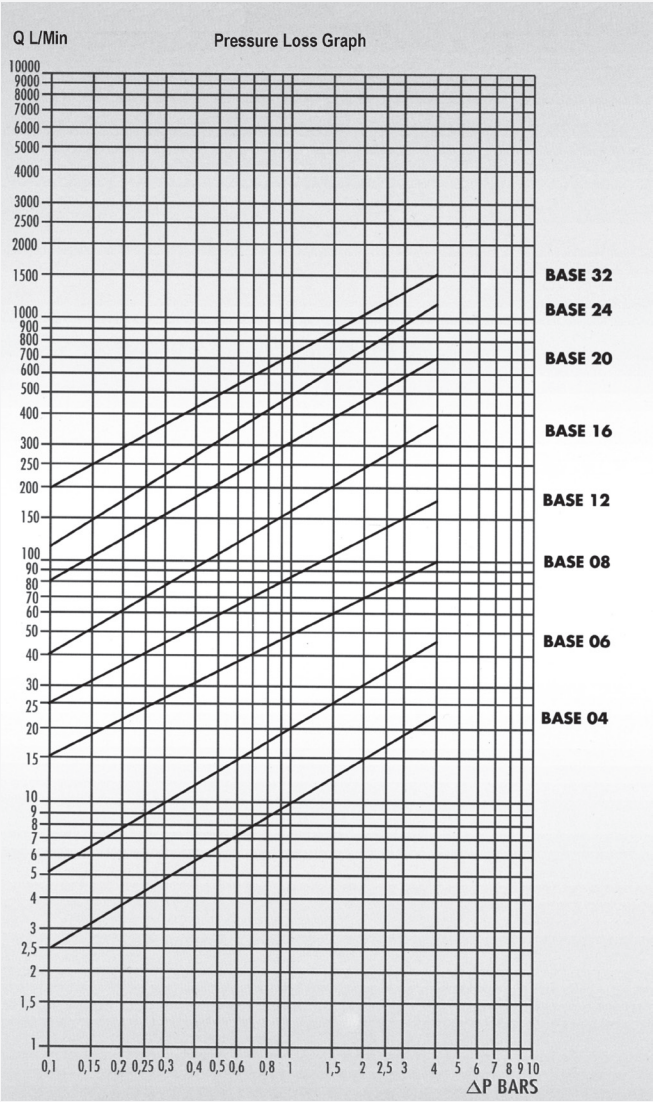

			Pressure Rating	
Size Base	DN	BSPP	Working	Burst
Dash	mm	ins	bar	bar
08	12	1/2"	400	1600
12	20	3/4"	350	1400
16	25	1"	300	1200

Pressure Loss as determined with hydraulic oil of:
SAE 10W
Temp: 50°C
Viscosity : 3E°

8200 SERIES

Screw to Connect Couplers
ISO 14541 Interchangeability

Steel construction
Internal valving from hardened steel
Nitrile seals with Teflon back-up seals
-20 ° C to +110 ° C temperature range
Commonly used in heavy duty applicatiions.
High resistance to pressure impulses.
External o-ring indicates when product is fully connected & protects coupling against dirt.
Connection is allowed with residual pressure to one side of the coupling (max. 100 bar)
Plastic dust plugs and caps available

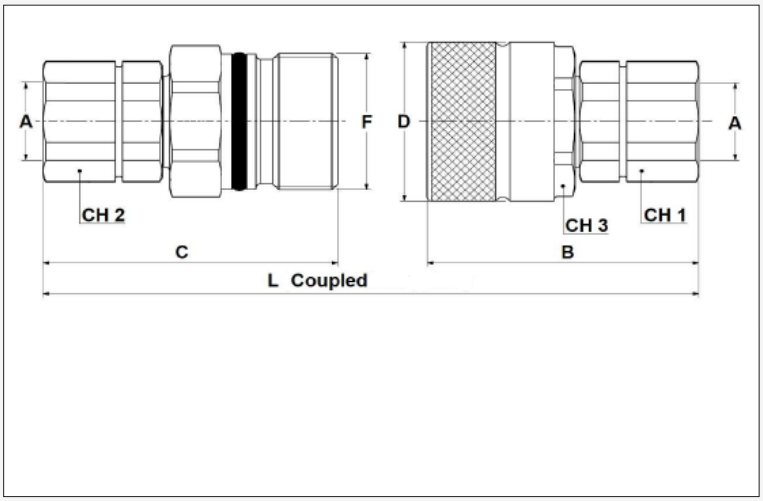

Product Code					Size Base	DN	BSPP	B	C	D	F	L	CH1	CH2	CH3
Male Probe	Female Carrier	Valve Type	Cap for Probe	Plug for Carrier		mm	ins	mm	mm	mm	mm	mm	mm	mm	mm
8201-08	**8202-08**	Poppet	**8203-08**	**8204-08**	08	12.5	1/2"	67	73	42	M36x2	113	30	30	36
8201-12	**8202-12**	Poppet	**8203-12**	**8204-12**	12	20	3/4"	78.5	85.5	47.5	M42x2	136	36	36	41
8201-16	**8202-16**	Poppet	**8203-16**	**8204-16**	16	25	1"	87	101	55	M48x3 SP	152.5	41	41	50

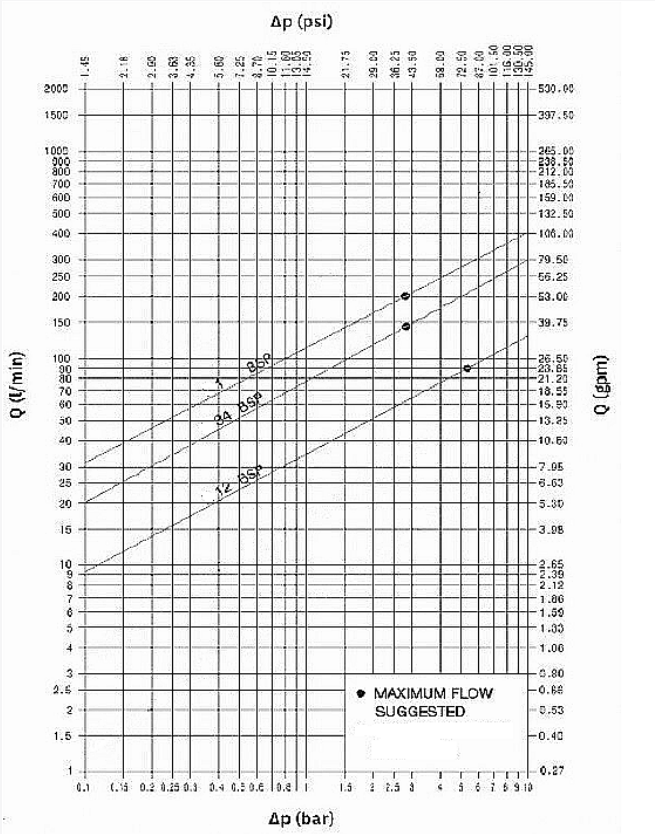

			Pressure Rating		
Size Base	DN	BSPP	Working	Burst	Max. Flow
	mm	ins	Bar	Bar	L/min
08	12.5	1/2"	400	1400	90
12	20	3/4"	400	1200	148
16	25	1"	300	1050	200

PIRTEK

This page is part of a complete catalogue containing technical and safety data.
All data must be reviewed when selecting a product.
Pirtek reserve the right to change technical specifications without notice

9000 SERIES

High Flow Couplers
Tema® Interchange

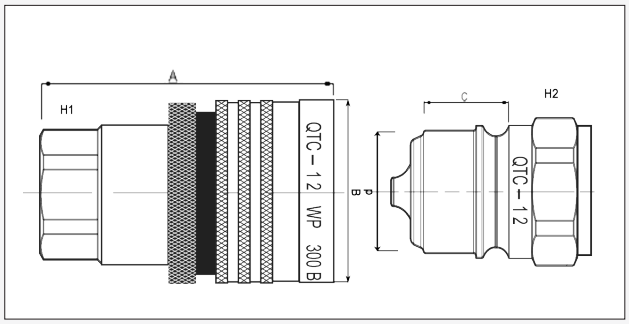

Applications:

A rugged high flow coupling offering minimum pressure drop and minimum flow reduction. Particularly suited to hydraulic applications in the transport industry.
Also suited to the high flow applications of the carpet cleaning industry.
Manual locking sleeve can be engaged to prevent accidental disconnection.

Technical Specifications:

Steel tri-valent plated body
Poppet type steel valve
Double Nitrile Buna N O-Rings with PTFE backup rings for improved sealing
-25 °C to +125 °C temperature range
Interchangeable with Tema® T Series and Stucchi® IRH couplings
Working Pressure: 300 bar (-16 250 Bar)

Quick release couplings are not intended to be used in hammer applications.

Product Code						Size Base	DN	BSPP	A	B	C	D	H1	H2
Male Tip	Female Body	Valve Type	Seal Kit	Cap for Tip	Plug for Body		mm	ins	mm	mm	mm	mm	mm	mm
9001-08	**9002-08**	Poppet	**9009-08**	N/A	N/A	08	13	1/2"	68.1	39.8	21.8	24.5	30	26.8
9001-12	**9002-12**	Poppet	**9009-12**	N/A	N/A	12	20	3/4"	76.2	52	26	32.7	38	35.8
9001-16	**9002-16**	Poppet	**9009-16**	9503-16	9504-16	16	25	1"	92.2	61.5	31	40.7	44.8	44.7

PRESSURE DROP GRAPH

SAE 10W
Temp: 50°C
Viscosity : 3E°

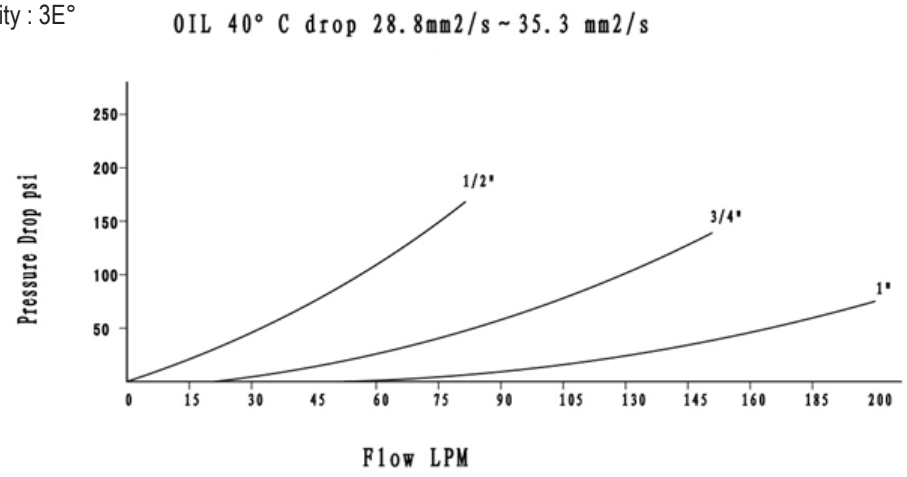

Pressure Loss as determined with hydraulic oil of:
SAE 10W
Temp: 40°C
Viscosity : 3E°

9500 SERIES

High Flow Coupling

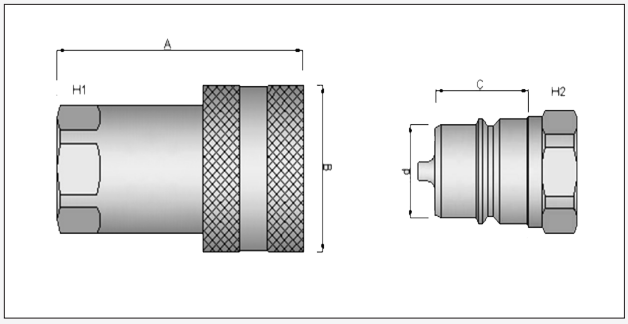

Applications:
A rugged high flow coupling offering minimum pressure drop and minimum flow reduction. Particularly suited to hydraulic applications in the transport industry and on hydraulic equipment.

Technical Specifications:
Steel tri-valent plated body
Poppet type steel valve
Nitrile Buna N O-Rings with PTFE backup rings for improved sealing
-20 ºC to +120 ºC temperature range
Operating Pressure: 300 bar.
Flow Rate: Up to 370 L/min.
Interchangeable with Faster NZ®, Stucchi® IRN and PBR® 3310 couplings
Quick release couplings are not intended to be used in hammer applications.

Product Code						Size Base	DN	BSPP	A	B	C	D	H1	H2
Male Tip	Female Body	Valve Type	Seal Kit	Cap for Tip	Plug for Body		mm	ins	mm	mm	mm	mm	mm	mm
9501-16	**9502-16**	Poppet	**9509-16**	**9503-16**	**9504-16**	16	25	1"	108.8	65.3	43	37.8	46	46

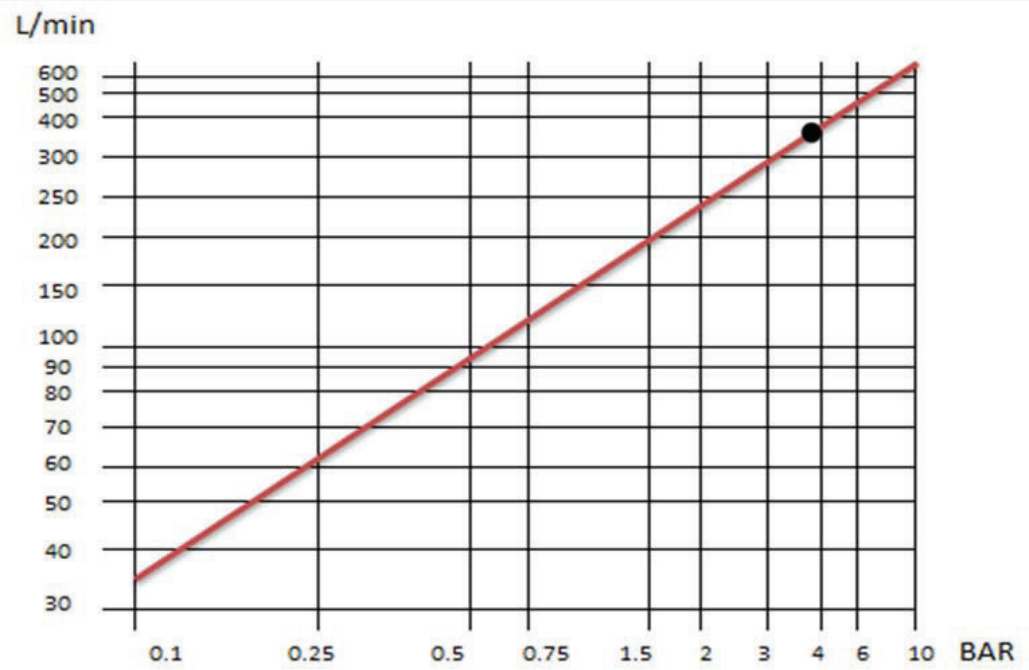

PIRTEK
This page is part of a complete catalogue containing technical and safety data.
All data must be reviewed when selecting a product.
Pirtek reserve the right to change technical specifications without notice

3000 SERIES

Jacking Couplings

ISO 14540 interchange
Screw to connect couplings designed for high pressure jacking applications.
Steel construction with Nitrile seals & PTFE backup ring.
700 Bar working pressure
Temperature range: -25ºC to +125ºC
Protective scew-on plated steel caps & plugs available.
Not suitable for applications where high flow/volume is required. Refer to 3200 series.

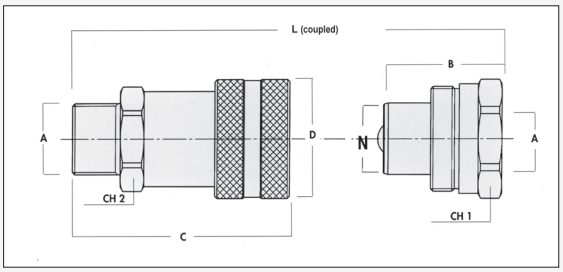

3000 SERIES BALL TYPE

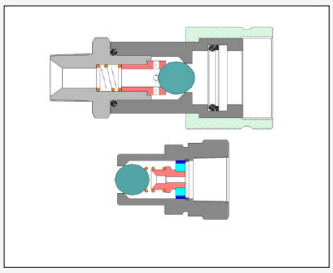

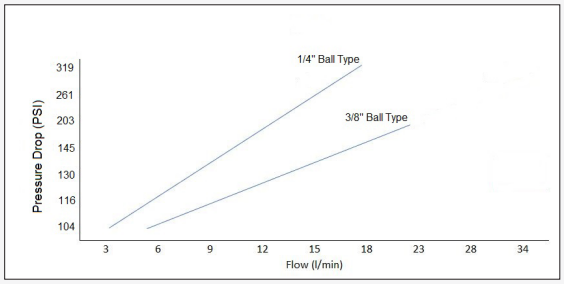

3200 SERIES POPPET TYPE

- used in applications with high flow/volume

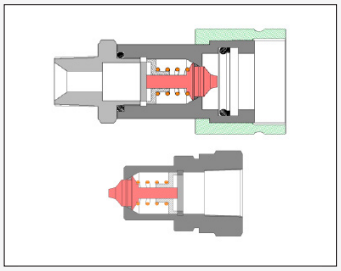

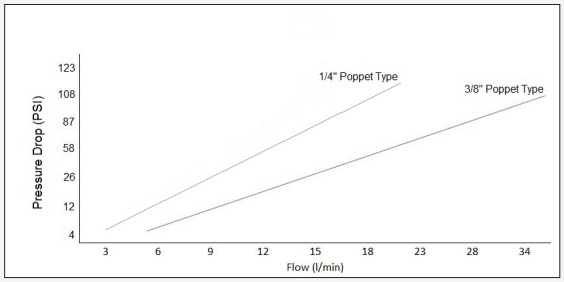

Product Code					Size	A	B	C	Ø D	L	CH1	CH2	Ø N
Male Tip	Female Body	Metal Cap for Tip	Metal Plug for Body	Seal Kit	Body	NPT	mm	mm	mm	mm	mm	mm	mm
3001-04	3002-04	3003-04	3004-04	3009-04	1/4"	1/4" Male	45	62.3	30	88.9	18.9	21.8	15.8
3001-06	3002-06	3003-06	3004-06	3009-06	3/8"	3/8" Male	40	70.9	35.2	86	31.7	23.9	19
	3002-06F					3/8" Female		73.4		87.9		24.9	
3201-04	3202-04	3003-04	3004-04	3009-04	1/4"	1/4" Male	45	71.6	30	98.3	18.8	21.9	15.7
3201-06	3202-06	3003-06	3004-06	3009-06	3/8"	3/8" Male	40.1	79.6	35.3	94.8	31.6	23.8	18.9

Note: It is not advisable to interchange the 2 different types due to the differences in the internal structure.

DIAGNOSTIC QUICK COUPLING

ISO 15171-1, SAE J1502 INTERCHANGE

Diagnostic quick connect couplings provide easy connections for mechanical gauges or specialised diagnosticequipment, used in various markets such as mining, construction and industrial on mobile equipment, hydraulic systems, fluid & air systems and cooling systems.

* Machined components are manufactured using solid steel bar stock and plated with trivalent chrome.
* Stainless steel balls, retaining rings and springs maximise corrosion resistance and extend service life.
* Steel nipples are machined from solid steel bar stock and hardened.
* Nitrile (Buna-N) seals
* PTFE anti-extrusion ring protects main coupler O-ring from dynamic impulse pressure damage.
* Temperature range: -40ºC to 121ºC
* Interchange with Parker PD series, Eaton/Aeroquip FD90, Caterpillar® type.

RATED PRESSURE								
"Body Size"	Steel Coupler/Nipple Connected				Steel Nipple Disconnected			
	Max. Working		Burst		Max. Working		Burst	
	Bar	PSI	Bar	PSI	Bar	PSI	Bar	PSI
1/8"	413	6000	1300	18854	413	6000	1600	23206

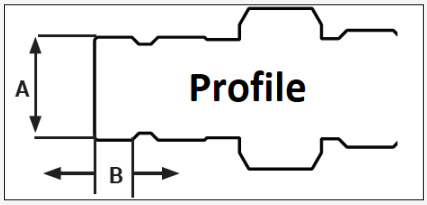

Body Size	A (mm)	B (mm)
1/8"	12.4	4.8

FUNCTIONAL PARAMETERS				
Air Inclusion	Fluid Loss	Vacuum	Rated Flow @ pressure drop 22 PSI	Max. Recommended Flow
cc	cc	in Hg		
0.02/connect	0.1/disconnect	27.4	3.0 LPM (0.8 GPM)	15.1 LPM (4 GPM)

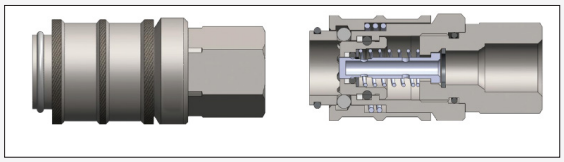

COUPLER X FEMALE THREAD				
Part Number	Thread	Length	Max. O.D	Hex
		mm	mm	mm
DQC-02NPTF	1/8"-27 NPT	54.1	24.8	21
DQC-04NPTF	1/4"-18 NPT	54.1	24.8	21

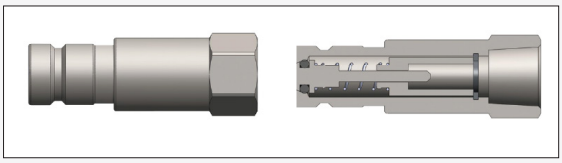

NIPPLE X FEMALE THREAD				
Part Number	Thread	Length	Max. O.D	Hex
		mm	mm	mm
DQCN-02NPTF	1/8"-27 NPT	47.7	19.3	17
DQCN-04NPTF	1/4"-18 NPT	47.7	19.3	17

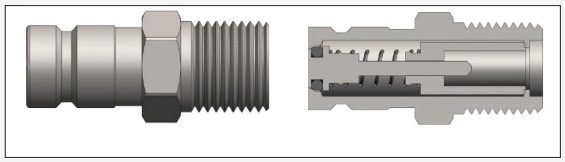

NIPPLE X MALE THREAD				
Part Number	Thread	Length	Max. O.D	Hex
		mm	mm	mm
DQCN-02NPTM	1/8"-27 NPT	50.2	19.3	17
DQCN-04NPTM	1/4"-18 NPT	37.5	19.3	17
DQCN-07UNO	7/16"-20 UNO	49.0	19.3	17
DQCN-09UNO	9/16"-18 UNO	37.5	19.3	17

DUST CAP SUIT NIPPLE		
Part Number	Body Size	Material
DQCNDC	1/8"	Nitrile (NBR)

PIRTEK

This page is part of a complete catalogue containing technical and safety data.
All data must be reviewed when selecting a product.
Pirtek reserve the right to change technical specifications without notice

2000 SERIES

Check Valves

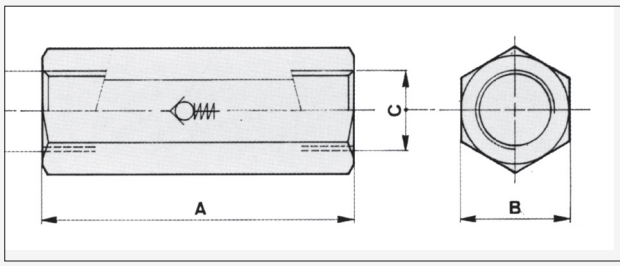

-20 ° C to +90 ° C temperature range
For use with mineral / petroleum based hydraulic oils
Safety Factor 2.5:1

Product Code	C	Max. Flow	Pressure (bar)			A	B
	BSPP Thread	l/min	Cracking	Max	Burst	mm	mm
2000-04	1/4”	13	0.5	350	875	60	19
2000-06	3/8”	25	0.5	350	875	70	24
2000-08	1/2”	40	0.5	350	875	76	30
2000-12	3/4”	60	0.5	300	750	92	36
2000-16	1”	90	0.5	250	625	108	45
2000-20	1-1/4”	160	0.5	250	625	127	55

SJ1 SERIES

Straight (In-line) Swivel Couplings BSPP Thread

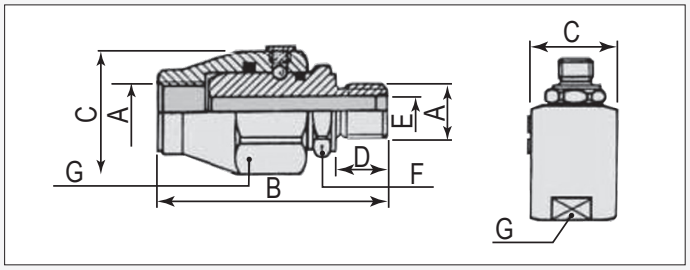

Designed to prevent twisting of a hose assembly that is attached to a rigid component if occassional rotation can occur
Steel construction
One row of radial balls up to 1/2" size
Two rows of radial balls in 3/4" and larger sizes
Nitrile seals
-20 ° C to +110 ° C temperature range

Product Code	Thread A	Dimensions (mm)						Max WP (bar)	
	BSPP (ins)	B	C	D	E	F	G	Rotation	Static
SJ1-04	1/4"	61	33	11	6.5	19	30	200	400
SJ1-06	3/8"	66	37	14	9	24	34	200	400
SJ1-08	1/2"	70	42	15	12	27	36	150	300
SJ1-12	3/4"	79	50	19	16	34	45	150	300
SJ1-16	1"	90	Ø 55	21	20	41	50	100	300
SJ1-20 †	1-1/4"	101	Ø 60	24	28	50	55	100	300
SJ1-24 †	1-1/2"	110	Ø 70	25	34	55	65	80	300
SJ1-32 †	2"	118	Ø 85	27	44	65	75	50	250

† BSPP male has a cone seal for attachment to a BSPP female hose fitting. No provision for a bonded washer port seal exists

SJ9 SERIES

90° Swivel Elbow Couplings BSPP Thread

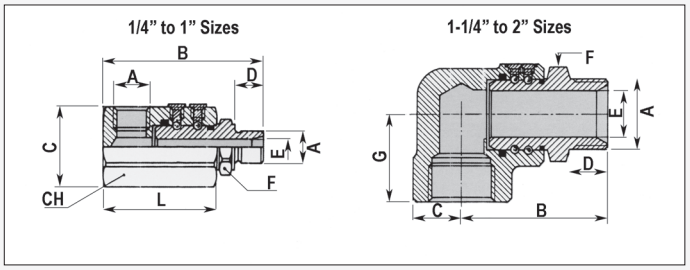

Designed to prevent twisting of a hose assembly that is attached to a rigid component if occassional rotation can occur
Steel construction
One row of radial balls up to 1/2" size
Two rows of radial balls in 3/4" and larger sizes
Nitrile seals
-20 ° C to +110 ° C temperature range
Please Note: SJ9 swivels are not suited for continuous or fast rotation

Product Code	Thread A	Dimensions (mm)							Max WP (bar)	
	BSPP (ins)	B	C	D	E	F	G	CH	Rotation	Static
SJ9-04	1/4"	69	30.5	11	6.5	19	58	30	200	400
SJ9-06	3/8"	78	41.5	14	9	24	63	36	200	400
SJ9-08	1/2"	86	44	15	12	27	68.5	38	150	300
SJ9-12	3/4"	99	58	19	16	34	79	50	150	300
SJ9-16	1"	113	Ø 60	21	20	41	90	60	100	300
SJ9-20 †	1-1/4"	92	Ø 31.5	24	28	50	56.5		100	300
SJ9-24 †	1-1/2"	104	38	25	34	55	62		80	300
SJ9-32 †	2"	111	45	27	44	65	67		50	250

† BSPP male has a cone seal for attachment to a BSPP female hose fitting. No provision for a bonded washer port seal exists

PIRTEK

This page is part of a complete catalogue containing technical and safety data.
All data must be reviewed when selecting a product.
Pirtek reserve the right to change technical specifications without notice