316 STAINLESS STEEL
HYDRAULIC ADAPTORS

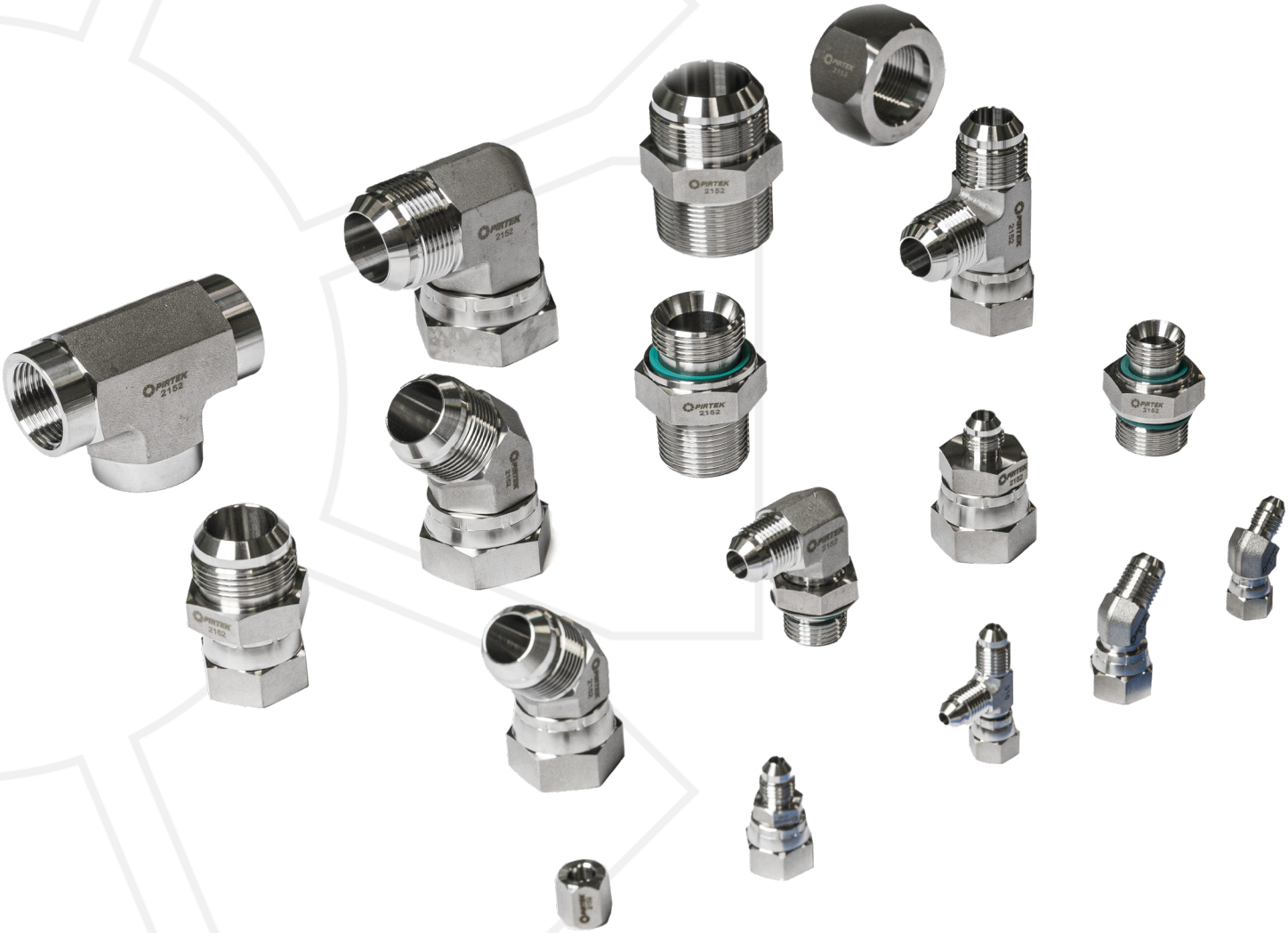

INDEX

PRESSURE RATING TABLE 3

STRAIGHT CONNECTORS 5

45° ELBOWS 35

90° ELBOWS 37

TEES / CROSSES 49

TUBE NUTS, ACCESSORIES & SEALS 54

PRESSURE RATING TABLE

NOTE: Each adaptors working pressure rating is based on the lowest pressure for that thread form and size.
S/S adaptors have a 4:1 safety factor.

BSPP MALE

SIZE	W.P (BAR)
1/8"	250
1/4"	250
3/8"	250
1/2"	250
5/8"	-
3/4"	160
1"	100
1.1/4"	100
1.1/2"	100
2"	100

BSPP MALE ADJUSTABLE

SIZE	W.P (BAR)
1/8"	200
1/4"	200
3/8"	200
1/2"	200
5/8"	-
3/4"	200
1"	200
1.1/4"	160
1.1/2"	160
2"	100

BSPP FEMALE

SIZE	W.P (BAR)
1/8"	350
1/4"	350
3/8"	350
1/2"	315
5/8"	315
3/4"	250
1"	200
1.1/4"	160
1.1/2"	125
2"	80

BSPT MALE

SIZE	W.P (BAR)
1/8"	345
1/4"	275
3/8"	210
1/2"	210
3/4"	170
1"	140
1.1/4"	80
1.1/2"	70
2"	70

BSPT FEMALE

SIZE	W.P (BAR)
1/8"	345
1/4"	275
3/8"	210
1/2"	210
3/4"	170
1"	140
1.1/4"	80
1.1/2"	70
2"	70

NPT MALE

SIZE	W.P (BAR)
1/8"	345
1/4"	275
3/8"	210
1/2"	210
3/4"	170
1"	140
1.1/4"	80
1.1/2"	70
2"	70

NPT FEMALE (FIXED)

SIZE	W.P (BAR)
1/8"	345
1/4"	275
3/8"	210
1/2"	210
3/4"	170
1"	140
1.1/4"	80
1.1/2"	70
2"	70

NPSM SWIVEL FEMALE

SIZE	W.P (BAR)
1/8"	345
1/4"	275
3/8"	210
1/2"	210
3/4"	170
1"	140
1.1/4"	80
1.1/2"	70
2"	70

When assembling 316 Stainless Steel fittings it is strongly recommended that an anti-seize paste or thread lubricant be applied to all threads. Before applying ensure the threads are clean and dry.

PRESSURE RATING TABLE

NOTE: Each adaptors working pressure rating is based on the lowest pressure for that thread form and size.
S/S adaptors have a 4:1 safety factor.

JIC MALE

SIZE	W.P (BAR)
7/16"	345
1/2"	345
9/16"	345
3/4"	310
7/8"	240
1.1/16"	240
1.3/16"	210
1.5/16"	210
1.5/8"	170
1.7/8"	140
2.1/2"	105

JIC SWIVEL FEMALE

SIZE	W.P (BAR)
7/16"	310
1/2"	275
9/16"	275
3/4"	275
7/8"	210
1.1/16"	210
1.3/16"	170
1.5/16"	170
1.5/8"	140
1.7/8"	105
2.1/2"	80

JIC FIXED FEMALE

SIZE	W.P (BAR)
7/16"	345
1/2"	345
9/16"	345
3/4"	310
7/8"	240
1.1/16"	240
1.3/16"	210
1.5/16"	210
1.5/8"	170
1.7/8"	140
2.1/2"	105

UNO MALE NON ADJUSTABLE

SIZE	W.P (BAR)
7/16"	345
1/2"	345
9/16"	345
3/4"	310
7/8"	240
1.1/16"	240
1.3/16"	210
1.5/16"	210
1.5/8"	170
1.7/8"	140

UNO MALE ADJUSTABLE

SIZE	W.P (BAR)
7/16"	315
1/2"	275
9/16"	275
3/4"	275
7/8"	210
1.1/16"	210
1.3/16"	170
1.5/16"	170
1.5/8"	140
1.7/8"	105

When assembling 316 Stainless Steel fittings it is strongly recommended that an anti-seize paste or thread lubricant be applied to all threads. Before applying ensure the threads are clean and dry.

STRAIGHT CONNECTORS VISUAL INDEX

Male x Male

Page 6

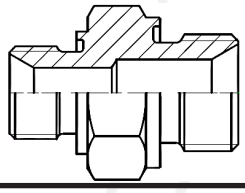

Male x Female Unions

Page 18

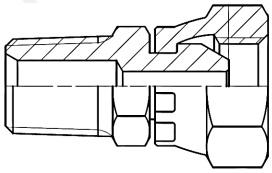

Reducing Bushes

Page 22

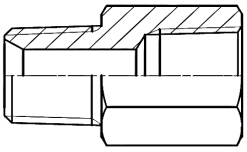

Sockets

Page 26

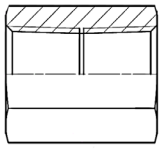

Plugs & Caps

Page 29

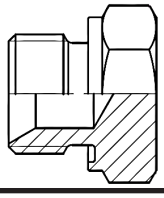

STRAIGHT CONNECTORS MALE X MALE VISUAL INDEX

SSAH BSPP x BSPP

Page 7

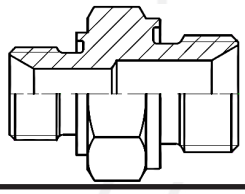

SSB BSPP x BSPP Bulkhead

Page 8

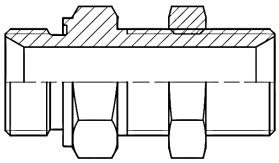

SSA BSPP x BSPT

Page 9

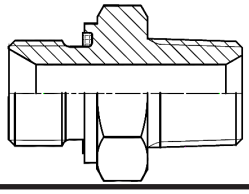

SSC BSPP x JIC

Page 10

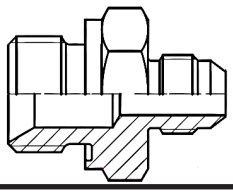

SSD BSPT x BSPT

Page 11

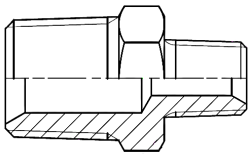

SSF BSPT x JIC

Page 12

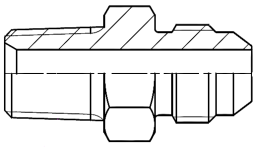

SSAN NPT x NPT

Page 13

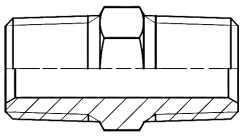

SSM NPT x JIC

Page 14

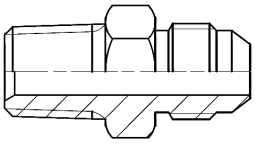

SSP JIC x JIC

Page 15

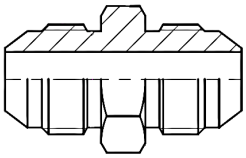

SSR JIC x JIC Bulkhead

Page 16

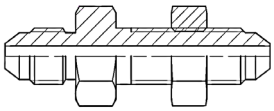

SSJ UNO x JIC

Page 17

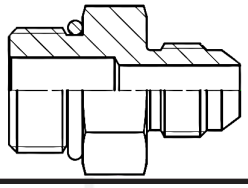

STRAIGHT CONNECTORS MALE X MALE SSAH

BSPP x BSPP MALE

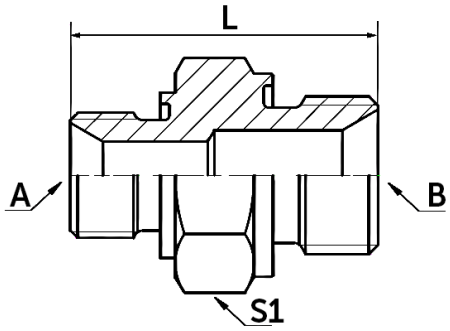

- AISI 316L (1.4404) grade material
- Thread: BSPP 30° chamfer seat
- Standards: ISO 228-1, AS 1722.2
- Sealing: Elastomer ED seal DIN 3869 FKM (Viton®) material

Product Code	A	B	L mm	S1 mm
SSAH-02-02 #	1/8" - BSPP	1/8" - BSPP	25.5	14
SSAH-04-04	1/4" - BSPP	1/4" - BSPP	32	19
SSAH-06-04	3/8" - BSPP	1/4" - BSPP	36.5	22
SSAH-06-06	3/8" - BSPP	3/8" - BSPP	34	22
SSAH-08-06	1/2" - BSPP	3/8" - BSPP	41	27
SSAH-08-08	1/2" - BSPP	1/2" - BSPP	40	27
SSAH-12-08	3/4" - BSPP	1/2" - BSPP	45	32
SSAH-12-12	3/4" - BSPP	3/4" - BSPP	44	32
SSAH-16-16	1" - BSPP	1" - BSPP	51	41
SSAH-20-20 #	1.1/4" - BSPP	1.1/4" - BSPP	58.5	50
SSAH-24-24 #	1.1/2" - BSPP	1.1/2" - BSPP	63	55
SSAH-32-32 #	2" - BSPP	2" - BSPP	66.5	75

NON-STOCKED ITEM, AVAILABLE ON REQUEST

STRAIGHT CONNECTORS MALE X MALE SSB

BSPP MALE x BSPP MALE BULKHEAD

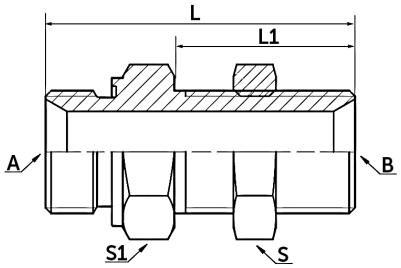

- AISI 316L (1.4404) grade material
- Thread: BSPP 30° chamfer seat
- Standards: ISO 228-1, AS 1722.2
- Sealing: Elastomer ED seal DIN 3869 FKM (Viton®) material

Product Code	A	B	L mm	L1 mm	S1 mm	S mm
SSB-04-04	1/4" - BSPP	1/4" - BSPP	51	29	19	19
SSB-06-06	3/8" - BSPP	3/8" - BSPP	54	31	22	22
SSB-08-08	1/2" - BSPP	1/2" - BSPP	67	37	27	27
SSB-10-10 #	5/8" - BSPP	5/8" - BSPP				
SSB-12-12	3/4" - BSPP	3/4" - BSPP	67	39	32	32
SSB-16-16 #	1" - BSPP	1" - BSPP	84	50	41	41
SSB-20-20 #	1.1/4" - BSPP	1.1/4" - BSPP	89.5	52	50	50
SSB-24-24 #	1.1/2" - BSPP	1.1/2" - BSPP	88	49	55	55

NON-STOCKED ITEM, AVAILABLE ON REQUEST

STRAIGHT CONNECTORS MALE X MALE SSA

BSPP MALE x BSPT MALE

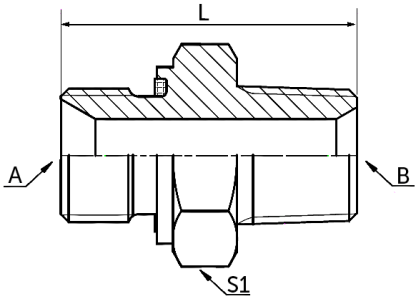

- AISI 316L (1.4404) grade material
- Thread: BSPP 30° chamfer seat x BSPT 30° chamfer seat
- Standards: ISO 228-1, AS 1722.2 / ISO 7-1
- Sealing: Elastomer ED seal DIN 3869 FKM (Viton®) material

Product Code	A	B	L mm	S1 mm
SSA-02-02 #	1/8" - BSPP	1/8" - BSPT	26	14
SSA-02-04 #	1/8" - BSPP	1/4" - BSPT	30.5	14
SSA-04-02 #	1/4" - BSPP	1/8" - BSPT	28.5	19
SSA-04-04	1/4" - BSPP	1/4" - BSPT	33.5	19
SSA-04-06 #	1/4" - BSPP	3/8" - BSPT	32	19
SSA-06-04 #	3/8" - BSPP	1/4" - BSPT	35.5	22
SSA-06-06	3/8" - BSPP	3/8" - BSPT	37	22
SSA-06-08 #	3/8" - BSPP	1/2" - BSPT	40.5	24
SSA-08-06 #	1/2" - BSPP	3/8" - BSPT	40	27
SSA-08-08	1/2" - BSPP	1/2" - BSPT	45.5	27
SSA-08-12	1/2" - BSPP	3/4" - BSPT	44.5	30
SSA-10-08 #	5/8" - BSPP	1/2" - BSPT	46.5	30
SSA-10-12 #	5/8" - BSPP	3/4" - BSPT	46.5	30
SSA-12-08 #	3/4" - BSPP	1/2" - BSPT	49.5	32
SSA-12-12 #	3/4" - BSPP	3/4" - BSPT	48.5	32
SSA-12-16 #	3/4" - BSPP	1" - BSPT	53.5	36
SSA-16-12 #	1" - BSPP	3/4" - BSPT	53	41
SSA-16-16	1" - BSPP	1" - BSPT	60.5	41
SSA-16-20 #	1" - BSPP	1.1/4" - BSPT	60	46
SSA-20-16 #	1.1/4" - BSPP	1" - BSPT	61	50
SSA-20-20	1.1/4" - BSPP	1.1/4" - BSPT	63.5	50
SSA-20-24 #	1.1/4" - BSPP	1.1/2" - BSPT	62	50
SSA-24-20 #	1.1/2" - BSPP	1.1/4" - BSPT	64.5	55
SSA-24-24 #	1.1/2" - BSPP	1.1/2" - BSPT	71	55
SSA-24-32 #	1.1/2" - BSPP	2" - BSPT	70	65
SSA-32-24 #	2" - BSPP	1.1/2" - BSPT	68.5	70
SSA-32-32 #	2" - BSPP	2" - BSPT	72.5	70

NON-STOCKED ITEM, AVAILABLE ON REQUEST

STRAIGHT CONNECTORS MALE X MALE SSC

BSPP MALE x JIC MALE

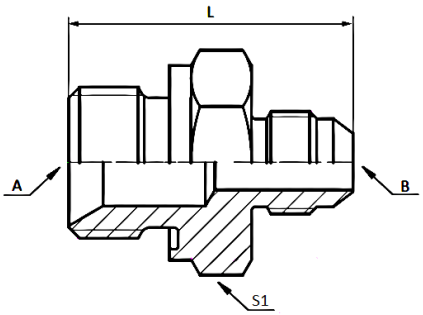

- AISI 316L (1.4404) grade material
- Thread: BSPP 30° chamfer seat x JIC 37° cone seat
- Standards: ISO 228-1, AS 1722.2 / SAE J514, ISO 8434-2
- Sealing: Elastomer ED seal DIN 3869 FKM (Viton®) material

Product Code	A	B	L mm	S1 mm
SSC-02-07	1/8" - BSPP	7/16" - JIC	29.5	14
SSC-02-08 #	1/8" - BSPP	1/2" - JIC	30	14
SSC-02-09 #	1/8" - BSPP	9/16" - JIC	31	17
SSC-04-07	1/4" - BSPP	7/16" - JIC	34	19
SSC-04-08 #	1/4" - BSPP	1/2" - JIC	34.8	19
SSC-04-09	1/4" - BSPP	9/16" - JIC	35.1	19
SSC-04-12 #	1/4" - BSPP	3/4" - JIC	39	19
SSC-06-07 #	3/8" - BSPP	7/16" - JIC	35.7	22
SSC-06-08 #	3/8" - BSPP	1/2" - JIC	35.7	22
SSC-06-09	3/8" - BSPP	9/16" - JIC	34	22
SSC-06-12	3/8" - BSPP	3/4" - JIC	37	22
SSC-06-14 #	3/8" - BSPP	7/8" - JIC	42.6	24
SSC-06-17 #	3/8" - BSPP	1.1/16" - JIC	47	27
SSC-08-07 #	1/2" - BSPP	7/16" - JIC	39.2	27
SSC-08-09	1/2" - BSPP	9/16" - JIC	39.5	27
SSC-08-12	1/2" - BSPP	3/4" - JIC	42	27
SSC-08-14	1/2" - BSPP	7/8" - JIC	46.5	27
SSC-08-17	1/2" - BSPP	1.1/16" - JIC	49	27
SSC-12-12 #	3/4" - BSPP	3/4" - JIC	45.6	32
SSC-12-14 #	3/4" - BSPP	7/8" - JIC	48.1	32
SSC-12-17	3/4" - BSPP	1.1/16" - JIC	49	30
SSC-12-21 #	3/4" - BSPP	1.5/16" - JIC	52.7	36
SSC-16-17	1" - BSPP	1.1/16" - JIC	54	41
SSC-16-21	1" - BSPP	1.5/16" - JIC	56	41
SSC-16-26 #	1" - BSPP	1.5/8" - JIC	62.1	46
SSC-20-21 #	1.1/4" - BSPP	1.5/16" - JIC	58.7	50
SSC-20-26 #	1.1/4" - BSPP	1.5/8" - JIC	60	50
SSC-20-30 #	1.1/4" - BSPP	1.7/8" - JIC	62	50
SSC-24-26 #	1.1/2" - BSPP	1.5/8" - JIC	63.8	55
SSC-24-30 #	1.1/2" - BSPP	1.7/8" - JIC	67.1	55

NON-STOCKED ITEM, AVAILABLE ON REQUEST

STRAIGHT CONNECTORS MALE X MALE SSD

BSPT MALE x BSPT MALE

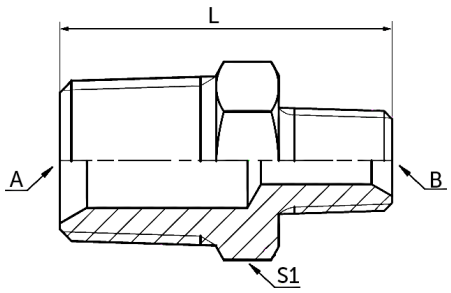

- AISI 316L (1.4404) grade material
- Thread: BSPT 30° chamfer seat
- Standards: ISO 7-1

Product Code	A	B	L mm	S1 mm
SSD-02-02	1/8" - BSPT	1/8" - BSPT	26	12
SSD-04-02	1/4" - BSPT	1/8" - BSPT	31	14
SSD-04-04	1/4" - BSPT	1/4" - BSPT	34	14
SSD-06-04	3/8" - BSPT	1/4" - BSPT	36	19
SSD-06-06	3/8" - BSPT	3/8" - BSPT	36	17
SSD-08-04	1/2" - BSPT	1/4" - BSPT	42.5	22
SSD-08-06	1/2" - BSPT	3/8" - BSPT	43	22
SSD-08-08	1/2" - BSPT	1/2" - BSPT	46	22
SSD-12-08	3/4" - BSPT	1/2" - BSPT	48	30
SSD-12-12	3/4" - BSPT	3/4" - BSPT	48	30
SSD-16-12	1" - BSPT	3/4" - BSPT	56	36
SSD-16-16	1" - BSPT	1" - BSPT	61	36
SSD-20-16	1.1/4" - BSPT	1" - BSPT	64.5	46
SSD-20-20	1.1/4" - BSPT	1.1/4" - BSPT	65.5	46
SSD-24-20 #	1.1/2" - BSPT	1.1/4" - BSPT	67	50
SSD-24-24	1.1/2" - BSPT	1.1/2" - BSPT	67	50
SSD-32-24 #	2" - BSPT	1.1/2" - BSPT	71.5	65
SSD-32-32 #	2" - BSPT	2" - BSPT	75	65

NON-STOCKED ITEM, AVAILABLE ON REQUEST

STRAIGHT CONNECTORS MALE X MALE SSF

BSPT MALE x JIC MALE

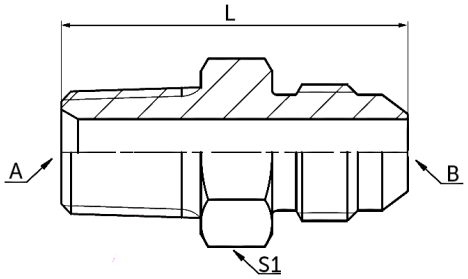

- AISI 316L (1.4404) grade material
- Thread: BSPT 30° chamfer seat x UNF/UN 37° cone seat
- Standards: ISO 7-1 / SAE J514, ISO 8434-2

Product Code	A	B	L mm	S1 mm
SSF-02-07	1/8" - BSPT	7/16" - JIC	30	12
SSF-02-08 #	1/8" - BSPT	1/2" - JIC	31	14
SSF-02-09	1/8" - BSPT	9/16" - JIC	31	17
SSF-04-07	1/4" - BSPT	7/16" - JIC	35	14
SSF-04-08 #	1/4" - BSPT	1/2" - JIC	36	14
SSF-04-09	1/4" - BSPT	9/16" - JIC	36	17
SSF-04-12	1/4" - BSPT	3/4" - JIC	38.5	22
SSF-06-09	3/8" - BSPT	9/16" - JIC	36	19
SSF-06-12	3/8" - BSPT	3/4" - JIC	39	22
SSF-06-14 #	3/8" - BSPT	7/8" - JIC	43.2	24
SSF-08-07	1/2" - BSPT	7/16" - JIC	42.5	22
SSF-08-09	1/2" - BSPT	9/16" - JIC	41	22
SSF-08-12	1/2" - BSPT	3/4" - JIC	45	22
SSF-08-14	1/2" - BSPT	7/8" - JIC	48.5	24
SSF-08-17	1/2" - BSPT	1.1/16" - JIC	51	30
SSF-12-12	3/4" - BSPT	3/4" - JIC	45.8	30
SSF-12-14	3/4" - BSPT	7/8" - JIC	48.5	30
SSF-12-17	3/4" - BSPT	1.1/16" - JIC	51	30
SSF-12-21	3/4" - BSPT	1.5/6" - JIC	54	36
SSF-16-17 #	1" - BSPT	1.1/16" - JIC	57.1	36
SSF-16-21	1" - BSPT	1.5/6" - JIC	59	36
SSF-16-26 #	1" - BSPT	1.5/8" - JIC	61.4	46
SSF-20-17	1.1/4" - BSPT	1.1/16" - JIC	60.6	46
SSF-20-21	1.1/4" - BSPT	1.5/6" - JIC	62	46
SSF-20-26 #	1.1/4" - BSPT	1.5/8" - JIC	62.2	46
SSF-24-30	1.1/2" - BSPT	1.7/8" - JIC	69.5	50

NON-STOCKED ITEM, AVAILABLE ON REQUEST

STRAIGHT CONNECTORS MALE X MALE SSAN

NPT MALE x NPT MALE

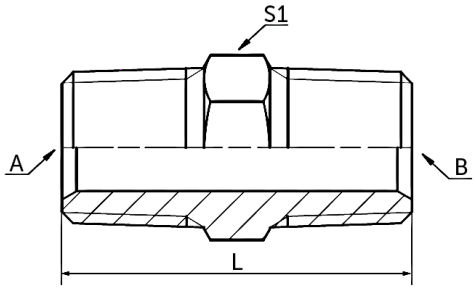

- AISI 316L (1.4404) grade material
- Thread: NPT 30° chamfer seat
- Standards: ANSI/ASME B1.20.1

Product Code	A	B	L mm	S1 mm
SSAN-02-02 #	1/8" - NPT	1/8" - NPT	27	12
SSAN-04-02 #	1/4" - NPT	1/8" - NPT	31	17
SSAN-04-04	1/4" - NPT	1/4" - NPT	37	15.9
SSAN-06-02 #	3/8" - NPT	1/8" - NPT	32	19
SSAN-06-04 #	3/8" - NPT	1/4" - NPT	37	19
SSAN-06-06	3/8" - NPT	3/8" - NPT	37	19.1
SSAN-08-04 #	1/2" - NPT	1/4" - NPT	41.5	22
SSAN-08-06 #	1/2" - NPT	3/8" - NPT	43.5	22
SSAN-08-08	1/2" - NPT	1/2" - NPT	48	22.2
SSAN-12-06 #	3/4" - NPT	3/8" - NPT	45.5	27
SSAN-12-08 #	3/4" - NPT	1/2" - NPT	49	27
SSAN-12-12	3/4" - NPT	3/4" - NPT	50	28.6
SSAN-16-08 #	1" - NPT	1/2" - NPT	56	36
SSAN-16-12 #	1" - NPT	3/4" - NPT	55	36
SSAN-16-16	1" - NPT	1" - NPT	59	34.9
SSAN-20-12 #	1.1/4" - NPT	3/4" - NPT	59	46
SSAN-20-16 #	1.1/4" - NPT	1" - NPT	64	46
SSAN-20-20 #	1.1/4" - NPT	1.1/4" - NPT	63	46
SSAN-24-16 #	1.1/2" - NPT	1" - NPT	68	50
SSAN-24-20 #	1.1/2" - NPT	1.1/4" - NPT	69	50
SSAN-24-24 #	1.1/2" - NPT	1.1/2" - NPT	66.5	50
SSAN-32-24 #	2" - NPT	1.1/2" - NPT	72	65
SSAN-32-32 #	2" - NPT	2" - NPT	71.5	65

NON-STOCKED ITEM, AVAILABLE ON REQUEST

STRAIGHT CONNECTORS MALE X MALE SSM

NPT MALE x JIC MALE

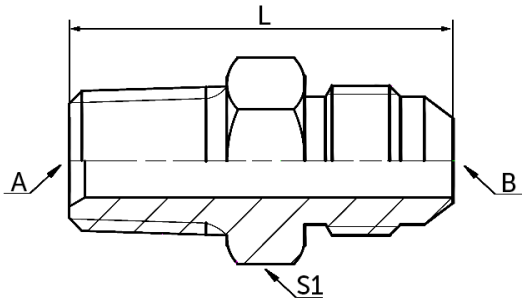

- AISI 316L (1.4404) grade material
- Thread: NPT 30° chamfer seat x UNF/UN 37° cone seat
- Standards: ANSI/ASME B1.20.1 / SAE J514, ISO 8434-2

Product Code	A	B	L mm	S1 mm
SSM-02-07	1/8" - NPT	7/16" - JIC	31	12.7
SSM-04-07	1/4" - NPT	7/16" - JIC	36	17
SSM-04-08 #	1/4" - NPT	1/2" - JIC	36	17
SSM-04-09	1/4" - NPT	9/16" - JIC	36.5	17
SSM-04-12 #	1/4" - NPT	3/4" - JIC	39	22
SSM-06-07 #	3/8" - NPT	7/16" - JIC	36	19
SSM-06-08 #	3/8" - NPT	1/2" - JIC	37	19
SSM-06-09	3/8" - NPT	9/16" - JIC	36	20.6
SSM-06-12	3/8" - NPT	3/4" - JIC	39	22
SSM-06-14 #	3/8" - NPT	7/8" - JIC	43.5	24
SSM-08-07 #	1/2" - NPT	7/16" - JIC	43	22
SSM-08-08 #	1/2" - NPT	1/2" - JIC	43	22
SSM-08-09	1/2" - NPT	9/16" - JIC	41.5	22
SSM-08-12	1/2" - NPT	3/4" - JIC	46	23.8
SSM-08-14	1/2" - NPT	7/8" - JIC	48	23.8
SSM-08-17	1/2" - NPT	1.1/16" - JIC	52	28.6
SSM-12-12	3/4" - NPT	3/4" - JIC	47	30
SSM-12-14 #	3/4" - NPT	7/8" - JIC	49.5	30
SSM-12-17	3/4" - NPT	1.1/16" - JIC	52	28.6
SSM-12-19 #	3/4" - NPT	1.3/16" - JIC	53	32
SSM-12-21 #	3/4" - NPT	1.5/16" - JIC	53.5	36
SSM-16-17	1" - NPT	1.1/16" - JIC	57	34.9
SSM-16-21	1" - NPT	1.5/16" - JIC	58	34.9
SSM-16-26 #	1" - NPT	1.5/8" - JIC	61.5	46
SSM-20-17 #	1.1/4" - NPT	1.1/16" - JIC	61.5	46
SSM-20-21 #	1.1/4" - NPT	1.5/16" - JIC	62.5	46
SSM-20-26 #	1.1/4" - NPT	1.5/8" - JIC	62.2	46
SSM-20-30 #	1.1/4" - NPT	1.7/8" - JIC	67.3	50
SSM-24-21 #	1.1/2" - NPT	1.5/16" - JIC	65.5	50
SSM-24-26 #	1.1/2" - NPT	1.5/8" - JIC	67	50
SSM-24-30 #	1.1/2" - NPT	1.7/8" - JIC	68	50
SSM-24-40 #	1.1/2" - NPT	2.1/2" - JIC	78.5	65
SSM-32-30 #	2" - NPT	1.7/8" - JIC	72	65
SSM-32-40 #	2" - NPT	2.1/2" - JIC	79	65

NON-STOCKED ITEM, AVAILABLE ON REQUEST

STRAIGHT CONNECTORS MALE X MALE SSP

JIC MALE x JIC MALE

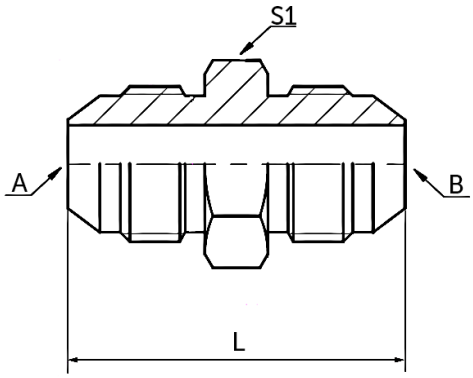

- AISI 316L (1.4404) grade material
- Thread: UNF/UN 37° cone seat
- Standards: SAE J514, ISO 8434-2

Product Code	A	B	L mm	S1 mm
SSP-07-07	7/16" - JIC	7/16" - JIC	35	12
SSP-08-07 #	1/2" - JIC	7/16" - JIC	34	14
SSP-08-08 #	1/2" - JIC	1/2" - JIC	34.8	14
SSP-09-07 #	9/16" - JIC	7/16" - JIC	36	17
SSP-09-08 #	9/16" - JIC	1/2" - JIC	34	17
SSP-09-09	9/16" - JIC	9/16" - JIC	34.2	17
SSP-12-07 #	3/4" - JIC	7/16" - JIC	38.5	22
SSP-12-08 #	3/4" - JIC	1/2" - JIC	38.5	22
SSP-12-09 #	3/4" - JIC	9/16" - JIC	38.5	22
SSP-12-12	3/4" - JIC	3/4" - JIC	41	22
SSP-14-09 #	7/8" - JIC	9/16" - JIC	41.5	24
SSP-14-12 #	7/8" - JIC	3/4" - JIC	44	24
SSP-14-14	7/8" - JIC	7/8" - JIC	48	23.8
SSP-17-12 #	1.1/16" - JIC	3/4" - JIC	49	30
SSP-17-14 #	1.1/16" - JIC	7/8" - JIC	51	30
SSP-17-17	1.1/16" - JIC	1.1/16" - JIC	55	28.6
SSP-19-17 #	1.3/16" - JIC	1.1/16" - JIC	55.5	32
SSP-19-19 #	1.3/16" - JIC	1.3/16" - JIC	56.1	32
SSP-21-14 #	1.5/16" - JIC	7/8" - JIC	53.5	36
SSP-21-17 #	1.5/16" - JIC	1.1/16" - JIC	56.1	36
SSP-21-19 #	1.5/16" - JIC	1.3/16" - JIC	56.5	36
SSP-21-21	1.5/16" - JIC	1.5/16" - JIC	57	34.9
SSP-26-21 #	1.5/8" - JIC	1.5/16" - JIC	60.5	46
SSP-26-26 #	1.5/8" - JIC	1.5/8" - JIC	62	46
SSP-30-21 #	1.7/8" - JIC	1.5/16" - JIC	65.5	50
SSP-30-26 #	1.7/8" - JIC	1.5/8" - JIC	67	50
SSP-30-30 #	1.7/8" - JIC	1.7/8" - JIC	70	50
SSP-40-26 #	2.1/2" - JIC	1.5/8" - JIC	75	65
SSP-40-30 #	2.1/2" - JIC	1.7/8" - JIC	78.5	65
SSP-40-40 #	2.1/2" - JIC	2.1/2" - JIC	85	65

NON-STOCKED ITEM, AVAILABLE ON REQUEST

STRAIGHT CONNECTORS MALE X MALE SSR

JIC MALE x JIC MALE BULKHEAD

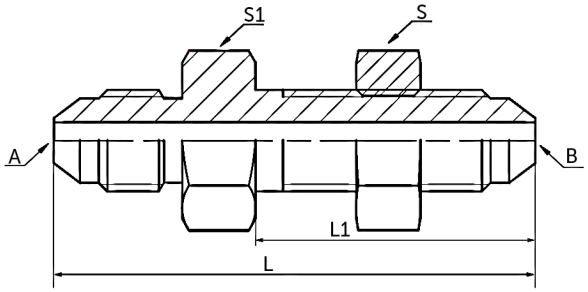

- AISI 316L (1.4404) grade material
- Thread: UNF/UN 37° cone seat
- Standards: SAE J514, ISO 8434-2
- Sealing: Lock nut

Product Code	A	B	L mm	L1 mm	S1 mm	S mm
SSR-07-07	7/16" - JIC	7/16" - JIC	52.5	31.1	17	17
SSR-08-08 #	1/2" - JIC	1/2" - JIC	52.6	30.5	19	19
SSR-09-09	9/16" - JIC	9/16" - JIC	55	33.5	20.6	20.6
SSR-12-12	3/4" - JIC	3/4" - JIC	62	37.1	25.4	25.4
SSR-14-14 #	7/8" - JIC	7/8" - JIC	69.6	40.1	30	30
SSR-17-17	1.1/16" - JIC	1.1/16" - JIC	78	45.1	34.9	34.9
SSR-19-19 #	1.3/16" - JIC	1.3/16" - JIC	79.2	44.4	38	38
SSR-21-21 #	1.5/16" - JIC	1.5/16" - JIC	79.8	44.4	41	41
SSR-26-26 #	1.5/8" - JIC	1.5/8" - JIC	84.1	45.7	50	50
SSR-30-30 #	1.7/8" - JIC	1.7/8" - JIC	89.4	46	55	55
SSR-40-40 #	2.1/2" - JIC	2.1/2" - JIC	106.7	53.1	70	70

NON-STOCKED ITEM, AVAILABLE ON REQUEST

STRAIGHT CONNECTORS MALE X MALE SSJ

UNO MALE x JIC MALE

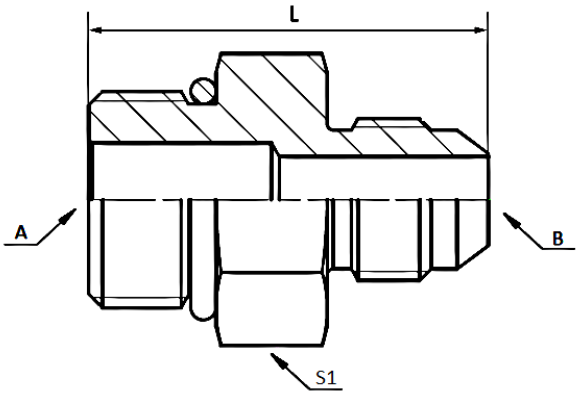

- AISI 316L (1.4404) grade material
- Thread: UNF/UN x UNF/UN 37° cone seat
- Standards: SAE J1926, ISO 11926 / SAE J514, ISO 8434-2
- Sealing: FKM (Viton®) O-ring. SAE J515

Product Code	A	B	L mm	S1 mm
SSJ-07-07	7/16" - UNO	7/16" - JIC	29	14.3
SSJ-07-09 #	7/16" - UNO	9/16" - JIC	32.3	15.9
SSJ-08-07 #	1/2" - UNO	7/16" - JIC	31.2	15.9
SSJ-08-09 #	1/2" - UNO	9/16" - JIC	32.3	15.9
SSJ-09-07 #	9/16" - UNO	7/16" - JIC	32.8	17.5
SSJ-09-09	9/16" - UNO	9/16" - JIC	33	17.5
SSJ-09-12 #	9/16" - UNO	3/4" - JIC	36.6	20.6
SSJ-12-07 #	3/4" - UNO	7/16" - JIC	34.8	22.2
SSJ-12-09	3/4" - UNO	9/16" - JIC	35	22.2
SSJ-12-12	3/4" - UNO	3/4" - JIC	38	22.2
SSJ-12-14	3/4" - UNO	7/8" - JIC	41.6	23.8
SSJ-14-09 #	7/8" - UNO	9/16" - JIC	38	25.4
SSJ-14-12 #	7/8" - UNO	3/4" - JIC	40.6	25.4
SSJ-14-14	7/8" - UNO	7/8" - JIC	43	25.4
SSJ-14-17 #	7/8" - UNO	1.1/16" - JIC	47.8	28.6
SSJ-17-09 #	1.1/16" - UNO	9/16" - JIC	42.2	31.7
SSJ-17-12 #	1.1/16" - UNO	3/4" - JIC	44.7	31.7
SSJ-17-14 #	1.1/16" - UNO	7/8" - JIC	47.2	31.7
SSJ-17-21 #	1.1/16" - UNO	1.5/16" - JIC	51.8	34.9
SSJ-17-17	1.1/16" - UNO	1.1/16" - JIC	50	31.7
SSJ-21-17	1.5/16" - UNO	1.1/16" - JIC	50.5	38.1
SSJ-21-21	1.5/16" - UNO	1.5/16" - JIC	52	38.1
SSJ-26-21 #	1.5/8" - UNO	1.5/16" - JIC	53.9	47.6
SSJ-26-26 #	1.5/8" - UNO	1.5/8" - JIC	55.1	47.6
SSJ-30-30 #	1.7/8" - UNO	1.7/8" - JIC	60.2	53.9

NON-STOCKED ITEM, AVAILABLE ON REQUEST

STRAIGHT CONNECTORS - MALE X FEMALE UNIONS VISUAL INDEX

SSAAM BSPT MALE x BSPP FEMALE SWIVEL
Page 19

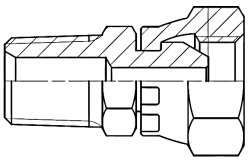

SSAAB BSPT MALE x JIC FEMALE SWIVEL
Page 20

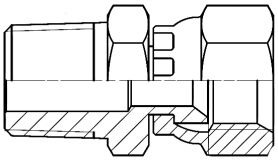

SSABN NPT FEMALE FIXED x JIC MALE
Page 21

STRAIGHT CONNECTORS - MALE X FEMALE UNIONS SSAAM

BSPT MALE x BSPP FEMALE SWIVEL

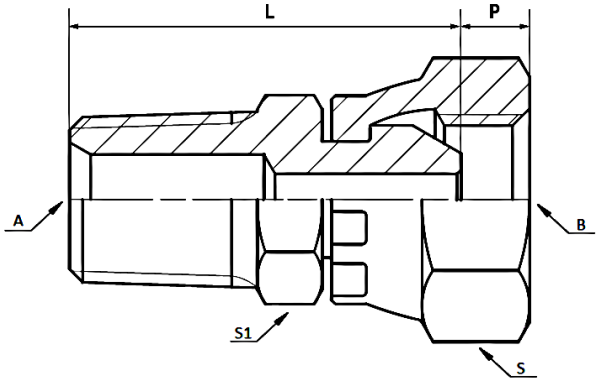

- AISI 316L (1.4404) grade material
- Thread: BSPT 30° chamfer seat x BSPP 30° cone seat
- Standards: ISO 7-1 / ISO 228-1, AS 1722.2

Product Code	A	B	L mm	P mm	S1 mm	S mm
SSAAM-02-02 #	1/8" - BSPT	1/8" - BSPP	25.7	4.5	12	14
SSAAM-04-04	1/4" - BSPT	1/4" - BSPP	32	5.2	17	19
SSAAM-06-04 #	3/8" - BSPT	1/4" - BSPP	31.5	5.3	19	19
SSAAM-06-06	3/8" - BSPT	3/8" - BSPP	33	6	19	22
SSAAM-06-08 #	3/8" - BSPT	1/2" - BSPP	34.8	6.5	19	27
SSAAM-08-06 #	1/2" - BSPT	3/8" - BSPP	40.2	5.5	22	22
SSAAM-08-08	1/2" - BSPT	1/2" - BSPP	44	6.4	22	27
SSAAM-08-12 #	1/2" - BSPT	3/4" - BSPP	42.6	8.9	22	32
SSAAM-12-08 #	3/4" - BSPT	1/2" - BSPP	43.2	6.5	30	27
SSAAM-12-12 #	3/4" - BSPT	3/4" - BSPP	45	8.9	30	32
SSAAM-12-16 #	3/4" - BSPT	1" - BSPP	45.7	9.7	30	41
SSAAM-16-12 #	1" - BSPT	3/4" - BSPP	50.6	8.9	36	32
SSAAM-16-16 #	1" - BSPT	1" - BSPP	52	9.7	36	41
SSAAM-20-16 #	1.1/4" - BSPT	1" - BSPP	54.8	9.7	46	41
SSAAM-20-20 #	1.1/4" - BSPT	1.1/4" - BSPP	58.5	10	46	50
SSAAM-24-24 #	1.1/2" - BSPT	1.1/2" - BSPP	61.5	13	50	55
SSAAM-32-32 #	2" - BSPT	2" - BSPP	67	16.5	65	70

NON-STOCKED ITEM, AVAILABLE ON REQUEST

STRAIGHT CONNECTORS - MALE X FEMALE UNIONS SSAAB

BSPT MALE x JIC FEMALE SWIVEL

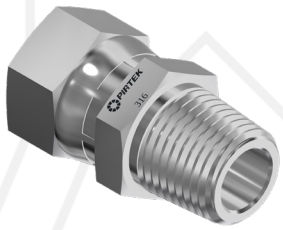

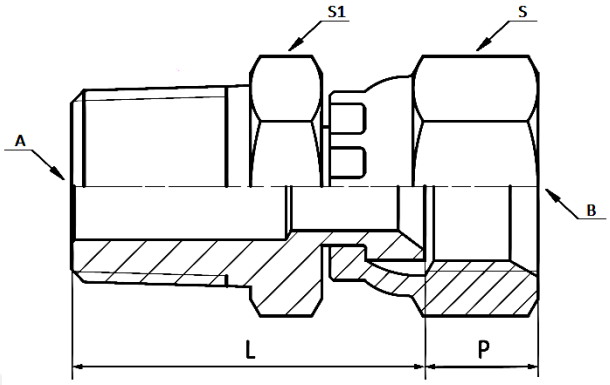

- AISI 316L (1.4404) grade material
- Thread: BSPT 30° chamfer seat x UNF/UN 37° cone seat
- Standards: ISO 7-1 / SAE J514, ISO 8434-2

Product Code	A	B	L mm	P mm	S1 mm	S mm
SSAAB-02-07	1/8" - BSPT	7/16" - JIC	24	8.5	12	14.3
SSAAB-04-07 #	1/4" - BSPT	7/16" - JIC	26.7	9	14	14
SSAAB-04-08 #	1/4" - BSPT	1/2" - JIC	27.2	9.5	14	17
SSAAB-04-09	1/4" - BSPT	9/16" - JIC	28.2	9.5	14	19
SSAAB-04-12 #	1/4" - BSPT	3/4" - JIC	30	11	19	24
SSAAB-06-09	3/8" - BSPT	9/16" - JIC	30	9.5	19	19
SSAAB-06-12	3/8" - BSPT	3/4" - JIC	31	10.3	19	19.1
SSAAB-08-12	1/2" - BSPT	3/4" - JIC	38	10.5	22	22.2
SSAAB-08-14 #	1/2" - BSPT	7/8" - JIC	36.5	13	22	27
SSAAB-08-17 #	1/2" - BSPT	1.1/16" - JIC	38.9	13.9	22	31.8
SSAAB-12-17	3/4" - BSPT	1.1/16" - JIC	42	14.4	30	32
SSAAB-12-21 #	3/4" - BSPT	1.5/16" - JIC	40.5	15.5	32	41
SSAAB-16-21	1" - BSPT	1.5/16" - JIC	50	14.8	36	38
SSAAB-20-26 #	1.1/4" - BSPT	1.5/8" - JIC	53.1	15.9	46	50

NON-STOCKED ITEM, AVAILABLE ON REQUEST

STRAIGHT CONNECTORS - MALE X FEMALE UNIONS SSABN

NPT FEMALE FIXED x JIC MALE

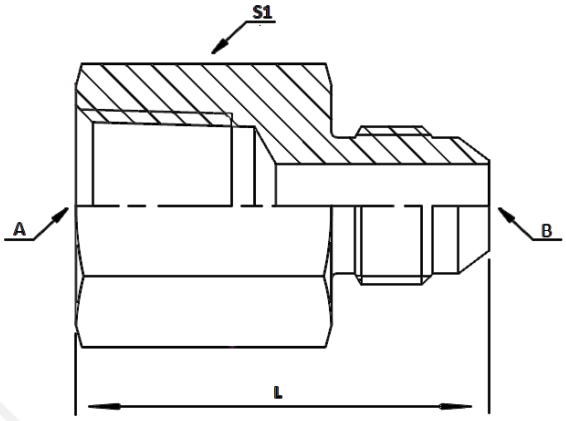

- AISI 316L (1.4404) grade material
- Thread: NPT x UNF/UN 37º cone seat
- Standards: ANSI/ASME B1.20.1 / SAE J514, ISO 8434-2

Product Code	A	B	L mm	S1 mm
SSABN-02-07 #	1/8" - NPT	7/16" - JIC	30	14
SSABN-04-07 #	1/4" - NPT	7/16" - JIC	35.5	19
SSABN-06-09	3/8" - NPT	9/16" - JIC	37	22
SSABN-06-12 #	3/8" - NPT	3/4" - JIC	39.6	22
SSABN-08-09 #	1/2" - NPT	9/16" - JIC	42.5	27
SSABN-08-12	1/2" - NPT	3/4" - JIC	45.5	27
SSABN-08-14 #	1/2" - NPT	7/8" - JIC	47.6	27
SSABN-12-17	3/4" - NPT	1.1/16" - JIC	51	36
SSABN-16-21 #	1" - NPT	1.5/16" - JIC	59.7	41
SSABN-20-26 #	1.1/4" - NPT	1.5/8" - JIC	61.5	50
SSABN-24-30 #	1.1/2" - NPT	1.7/8" - JIC	64.5	60
SSABN-32-40 #	2" - NPT	2.1/2" - JIC	71	70

NON-STOCKED ITEM, AVAILABLE ON REQUEST

STRAIGHT CONNECTORS - REDUCING BUSHES VISUAL INDEX

SSAQ BSPT MALE x BSPT FEMALE
Page 23

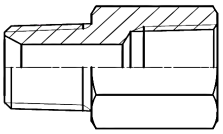

SSAR NPT MALE x NPT FEMALE
Page 24

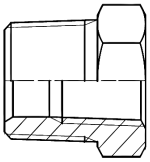

SSBB JIC FEMALE SWIVEL NUT x JIC MALE
Page 25

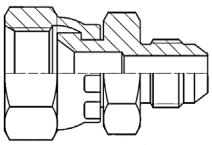

STRAIGHT CONNECTORS - REDUCING BUSHES SSAQ

BSPT MALE x BSPT FEMALE

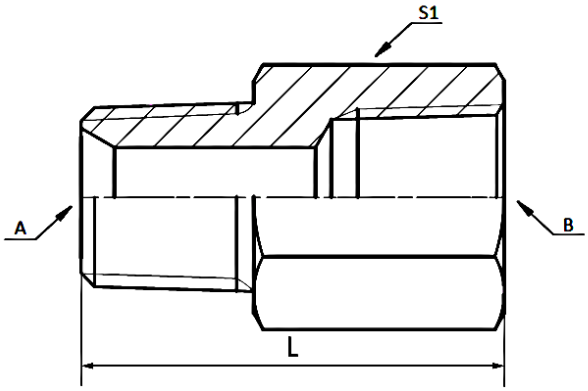

- AISI 316L (1.4404) grade material
- Thread: BSPT 30° chamfer seat
- Standards: ISO 7-1

Product Code	A	B	L mm	S1 mm
SSAQ-02-04 #	1/8" - BSPT	1/4" - BSPT	32.5	19
SSAQ-04-02	1/4" - BSPT	1/8" - BSPT	21	14
SSAQ-04-06 #	1/4" - BSPT	3/8" - BSPT	38	22
SSAQ-06-04	3/8" - BSPT	1/4" - BSPT	22	19
SSAQ-06-08 #	3/8" - BSPT	1/2" - BSPT	44	27
SSAQ-08-04	1/2" - BSPT	1/4" - BSPT	28	22
SSAQ-08-06	1/2" - BSPT	3/8" - BSPT	28	22
SSAQ-08-12 #	1/2" - BSPT	3/4" - BSPT	51	36
SSAQ-12-06 #	3/4" - BSPT	3/8" - BSPT	31	30
SSAQ-12-08	3/4" - BSPT	1/2" - BSPT	29	30
SSAQ-12-16 #	3/4" - BSPT	1" - BSPT	56.5	41
SSAQ-16-08 #	1" - BSPT	1/2" - BSPT	37	36
SSAQ-16-12	1" - BSPT	3/4" - BSPT	34	36
SSAQ-16-20 #	1" - BSPT	1.1/4" - BSPT	64	50
SSAQ-20-12 #	1.1/4" - BSPT	3/4" - BSPT	38	46
SSAQ-20-16	1.1/4" - BSPT	1" - BSPT	38	45
SSAQ-24-16 #	1.1/2" - BSPT	1" - BSPT	41	50
SSAQ-24-20 #	1.1/2" - BSPT	1.1/4" - BSPT	41	50
SSAQ-32-20 #	2" - BSPT	1.1/4" - BSPT	45	65
SSAQ-32-24 #	2" - BSPT	1.1/2" - BSPT	45	65

NON-STOCKED ITEM, AVAILABLE ON REQUEST

STRAIGHT CONNECTORS - REDUCING BUSHES SSAR

NPT MALE x NPT FEMALE

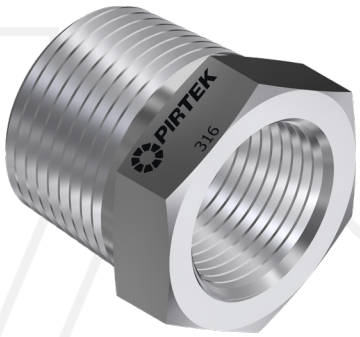

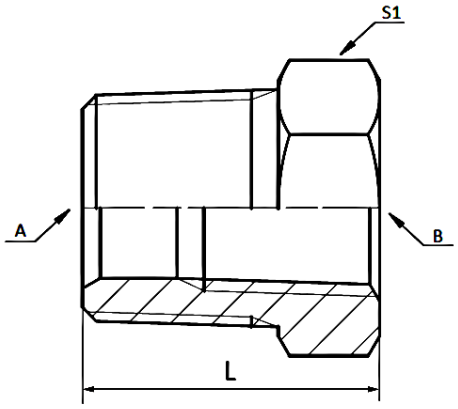

- AISI 316L (1.4404) grade material
- Thread: NPT 30° chamfer seat
- Standards: ANSI/ASME B1.20.1

Product Code	A	B	L mm	S1 mm
SSAR-04-02	1/4" - NPT	1/8" - NPT	22	15.9
SSAR-04-06 #	1/4" - NPT	3/8" - NPT	37	24
SSAR-06-04	3/8" - NPT	1/4" - NPT	22	19.1
SSAR-06-08 #	3/8" - NPT	1/2" - NPT	43	30
SSAR-08-06	1/2" - NPT	3/8" - NPT	28	22.2
SSAR-08-12 #	1/2" - NPT	3/4" - NPT	49	36
SSAR-12-08	3/4" - NPT	1/2" - NPT	30	28.6
SSAR-16-12	1" - NPT	3/4" - NPT	35	34.9
SSAR-16-20 #	1" - NPT	1.1/4" - NPT	62.5	50
SSAR-20-16 #	1.1/4" - NPT	1" - NPT	37.5	46
SSAR-20-24 #	1.1/4" - NPT	1.1/2" - NPT	63.5	60
SSAR-24-20 #	1.1/2" - NPT	1.1/4" - NPT	40	50
SSAR-24-32 #	1.1/2" - NPT	2" - NPT	67	70
SSAR-32-24 #	2" - NPT	1.1/2" - NPT	44.5	65

NON-STOCKED ITEM, AVAILABLE ON REQUEST

STRAIGHT CONNECTORS - REDUCING BUSHES SSBB

JIC FEMALE SWIVEL NUT x JIC MALE

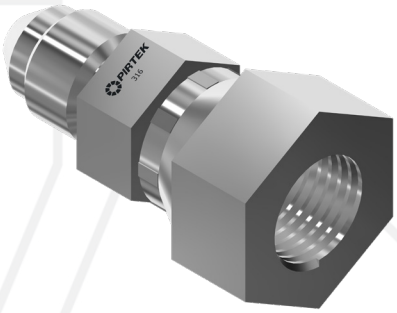

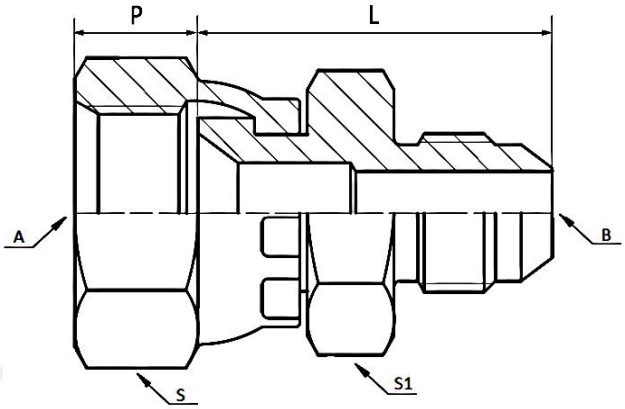

- AISI 316L (1.4404) grade material
- Thread: UNF/UN 37° chamfer seat - cone seat
- Standards: SAE J514, ISO 8434-2

Product Code	A	B	L mm	P mm	S1 mm	S mm
SSBB-08-07 #	1/2" - JIC	7/16" - JIC	28	9.5	12	17
SSBB-09-07	9/16" - JIC	7/16" - JIC	28.7	9.5	14	19
SSBB-09-08 #	9/16" - JIC	1/2" - JIC	28.5	9.5	14	19
SSBB-09-12 #	9/16" - JIC	3/4" - JIC	34	9.5	22	19
SSBB-12-07 #	3/4" - JIC	7/16" - JIC	30.5	11	19	24
SSBB-12-08 #	3/4" - JIC	1/2" - JIC	30.5	11	19	24
SSBB-12-09	3/4" - JIC	9/16" - JIC	31.5	11	19	24
SSBB-12-14 #	3/4" - JIC	7/8" - JIC	38	11	24	24
SSBB-14-09 #	7/8" - JIC	9/16" - JIC	33.5	13	22	27
SSBB-14-12	7/8" - JIC	3/4" - JIC	35.5	13	22	27
SSBB-14-17 #	7/8" - JIC	1.1/16" - JIC	43.5	13	30	27
SSBB-17-09	1.1/16" - JIC	9/16" - JIC	37	13.9	27	32
SSBB-17-12	1.1/16" - JIC	3/4" - JIC	39.6	13.9	27	32
SSBB-17-14 #	1.1/16" - JIC	7/8" - JIC	42	13.9	27	32
SSBB-17-21	1.1/16" - JIC	1.5/16" - JIC	47.5	13.9	36	32
SSBB-21-17	1.5/16" - JIC	1.1/16" - JIC	45.4	15.5	36	41
SSBB-26-21 #	1.5/8" - JIC	1.5/16" - JIC	53	15.9	41	50
SSBB-30-26 #	1.7/8" - JIC	1.5/8" - JIC	55.5	19	46	55
SSBB-40-30 #	2.1/2" - JIC	1.7/8" - JIC	63	23.5	65	75

NON-STOCKED ITEM, AVAILABLE ON REQUEST

STRAIGHT CONNECTORS - SOCKETS VISUAL INDEX

SSW BSPT FEMALE x BSPT FEMALE
Page 27

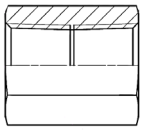

SSW_P BSPP FEMALE x BSPP FEMALE
Page 28

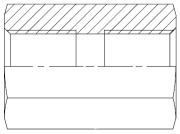

SSV NPT FEMALE x NPT FEMALE
Page 29

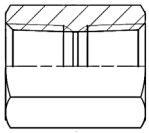

STRAIGHT CONNECTORS - SOCKETS SSW

BSPT FEMALE x BSPT FEMALE

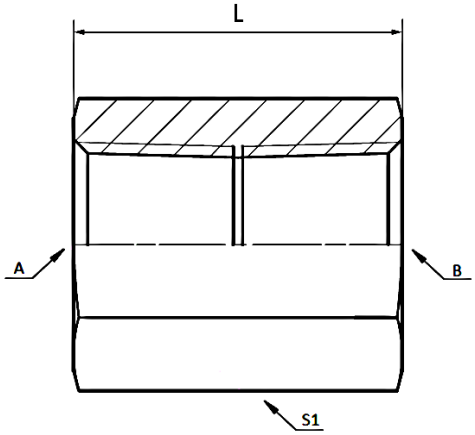

- AISI 316L (1.4404) grade material
- Thread: BSPT
- Standards: ISO 7-1

Product Code	A	B	L mm	S1 mm
SSW-02-02	1/8" - BSPT	1/8" - BSPT	20	14
SSW-04-04	1/4" - BSPT	1/4" - BSPT	30	19
SSW-06-06	3/8" - BSPT	3/8" - BSPT	30	22
SSW-08-08	1/2" - BSPT	1/2" - BSPT	38	27
SSW-12-12	3/4" - BSPT	3/4" - BSPT	42	36
SSW-16-16	1" - BSPT	1" - BSPT	50	41
SSW-20-20 #	1.1/4" - BSPT	1.1/4" - BSPT	55	50
SSW-24-24 #	1.1/2" - BSPT	1.1/2" - BSPT	55	55
SSW-32-32 #	2" - BSPT	2" - BSPT	65	70

NON-STOCKED ITEM, AVAILABLE ON REQUEST

STRAIGHT CONNECTORS - SOCKETS SSW_P

BSPP FEMALE x BSPP FEMALE

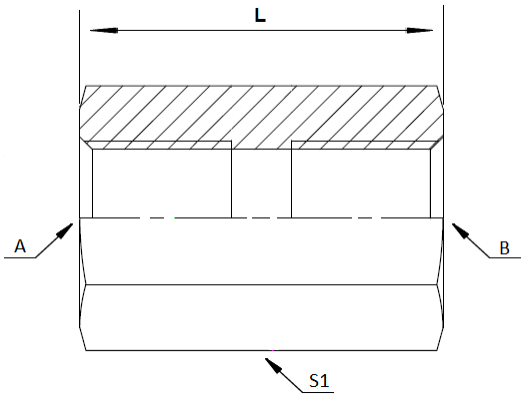

- AISI 316L (1.4404) grade material
- Thread: BSPP
- Standards: ISO 228-1, AS 1722.2

Product Code	A mm	B mm	L mm	S1 mm
SSW-02-02P	1/8"-BSPP	1/8"-BSPP	21	14
SSW-04-04P	1/4"-BSPP	1/4"-BSPP	30	19
SSW-06-06P	3/8"-BSPP	3/8"-BSPP	31	22
SSW-08-08P	1/2"-BSPP	1/2"-BSPP	32.5	27
SSW-10-10P #	5/8"-BSPP	5/8"-BSPP	38	30
SSW-12-12P	3/4"-BSPP	3/4"-BSPP	38	32
SSW-16-16P	1"-BSPP	1"-BSPP	42	41
SSW-20-20P #	1.1/4"-BSPP	1.1/4"-BSPP	46	50
SSW-24-24P #	1.1/2"-BSPP	1.1/2"-BSPP	47	55
SSW-32-32P #	2"-BSPP	2"-BSPP	56	70

NON-STOCKED ITEM, AVAILABLE ON REQUEST

STRAIGHT CONNECTORS - SOCKETS
SSV
NPT FEMALE x NPT FEMALE

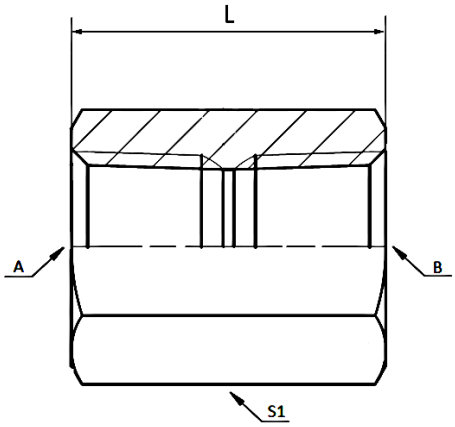

- AISI 316L (1.4404) grade material
- Thread: NPT
- Standards: ANSI/ASME B1.20.1

Product Code	A	B	L mm	S1 mm
SSV-02-02	1/8" - NPT	1/8" - NPT	19	15.9
SSV-04-04	1/4" - NPT	1/4" - NPT	29	19
SSV-06-06	3/8" - NPT	3/8" - NPT	29	22.2
SSV-08-08	1/2" - NPT	1/2" - NPT	38	30
SSV-12-12 #	3/4" - NPT	3/4" - NPT	39	36
SSV-16-16 #	1" - NPT	1" - NPT	48	41
SSV-20-20 #	1.1/4" - NPT	1.1/4" - NPT	49	50
SSV-24-24 #	1.1/2" - NPT	1.1/2" - NPT	49	60
SSV-32-32 #	2" - NPT	2" - NPT	50	70

NON-STOCKED ITEM, AVAILABLE ON REQUEST

STRAIGHT CONNECTORS - PLUGS & CAPS VISUAL INDEX

SSAP
BSPP MALE PLUG
Page 31

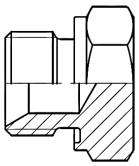

SSAS
BSPT MALE PLUG
Page 32

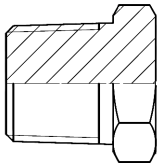

SSAU
JIC MALE PLUG
Page 33

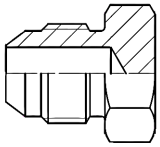

SSAW
JIC FEMALE SWIVEL CAP
Page 34

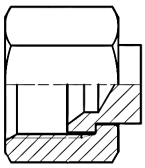

STRAIGHT CONNECTORS - PLUGS & CAPS
SSAP
BSPP MALE PLUG

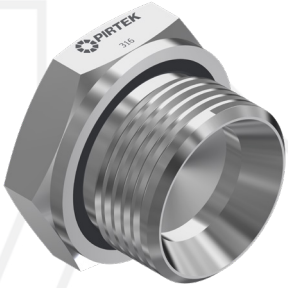

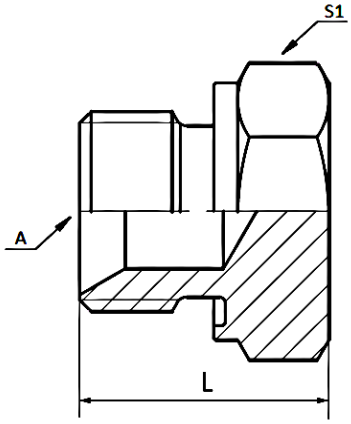

- AISI 316L (1.4404) grade material
- Thread: BSPP 30° chamfer seat
- Standards: ISO 228-1, AS 1722.2
- Sealing: Elastomer ED seal DIN 3869 FKM (Viton®) material

Product Code	A	L mm	S1 mm
SSAP-02	1/8" - BSPP	15.5	14
SSAP-04	1/4" - BSPP	20	19
SSAP-06	3/8" - BSPP	23	22
SSAP-08	1/2" - BSPP	26	27
SSAP-12	3/4" - BSPP	29	32
SSAP-16	1" - BSPP	31.5	41
SSAP-20 #	1.1/4" - BSPP	37	50
SSAP-24 #	1.1/2" - BSPP	40	55

NON-STOCKED ITEM, AVAILABLE ON REQUEST

STRAIGHT CONNECTORS - PLUGS & CAPS
SSAS
BSPT MALE PLUG

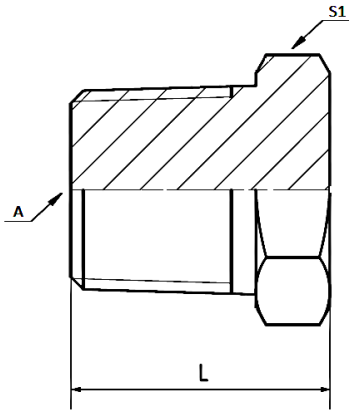

- AISI 316L (1.4404) grade material
- Thread: BSPT 30° chamfer seat
- Standards: ANSI/ASME B1.20.1

Product Code	A	L mm	S1 mm
SSAS-02	1/8" - BSPT	16	12
SSAS-04	1/4" - BSPT	20	14
SSAS-06	3/8" - BSPT	21	19
SSAS-08	1/2" - BSPT	27	22
SSAS-12	3/4" - BSPT	29	27
SSAS-16	1" - BSPT	37	36
SSAS-20 #	1.1/4" - BSPT	38.5	46
SSAS-24 #	1.1/2" - BSPT	42	50
SSAS-32 #	2" - BSPT	47	65

NON-STOCKED ITEM, AVAILABLE ON REQUEST

STRAIGHT CONNECTORS - PLUGS & CAPS
SSAU
JIC MALE PLUG

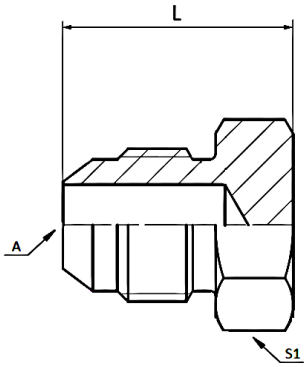

- AISI 316L (1.4404) grade material
- Thread: JIC 37° cone seat
- Standards: SAE J514, ISO 8434-2

Product Code	A	L mm	S1 mm
SSAU-07	7/16" - JIC	20	12.7
SSAU-08	1/2" - JIC	20.3	14
SSAU-09	9/16" - JIC	21	15.9
SSAU-12	3/4" - JIC	24	20.6
SSAU-14	7/8" - JIC	28	23.8
SSAU-17	1.1/16" - JIC	33	28.6
SSAU-19 #	1.3/16" - JIC	33.3	32
SSAU-21	1.5/16" - JIC	34	34.9
SSAU-26 #	1.5/8" - JIC	36.8	46
SSAU-30 #	1.7/8" - JIC	42	50
SSAU-40 #	2" - JIC	52	65

NON-STOCKED ITEM, AVAILABLE ON REQUEST

STRAIGHT CONNECTORS - PLUGS & CAPS
SSAW
JIC FEMALE SWIVEL CAP

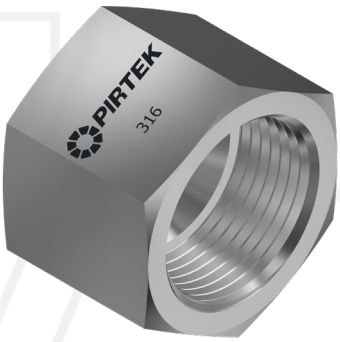

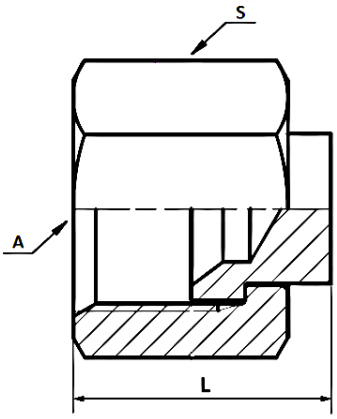

- AISI 316L (1.4404) grade material
- Thread: JIC 37° chamfer seat
- Standards: SAE J514, ISO 8434-2

Product Code	A	L mm	S1 mm
SSAW-07	7/16" - JIC	15	14.3
SSAW-08 #	1/2" - JIC	16	17
SSAW-09	9/16" - JIC	16	17.5
SSAW-12	3/4" - JIC	19	22.2
SSAW-14	7/8" - JIC	21	25.4
SSAW-17	1.1/16" - JIC	23	31.8
SSAW-19 #	1.3/16" - JIC	25	36
SSAW-21	1.5/16" - JIC	26	38.1
SSAW-26 #	1.5/8" - JIC	27	50
SSAW-30 #	1.7/8" - JIC	30	55
SSAW-40 #	2.1/2" - JIC	37	75

NON-STOCKED ITEM, AVAILABLE ON REQUEST

45° ELBOW CONNECTORS VISUAL INDEX

SSCGB
JIC MALE x JIC
FEMALE SWIVEL
Page 36

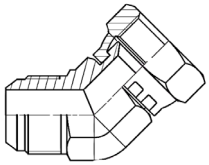

45° ELBOW CONNECTORS SSCGB

JIC MALE x JIC FEMALE SWIVEL

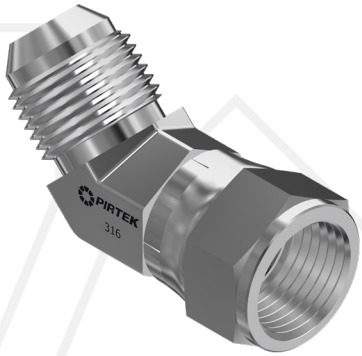

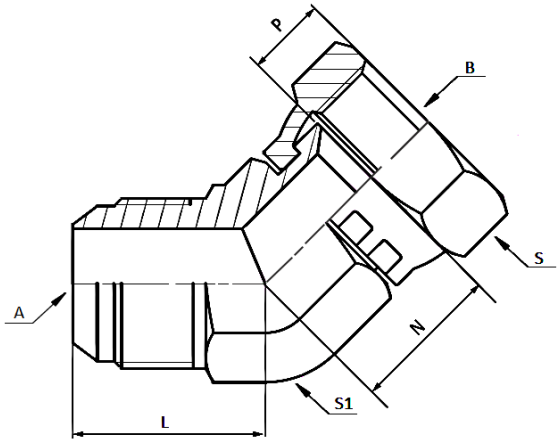

- AISI 316L (1.4404) grade material
- Thread: UNF/UN 37° cone seat - chamfer seat
- Standards: SAE J514, ISO 8434-2

Product Code	A	B	L mm	N mm	P mm	S1 mm	S mm
SSCGB-07-07	7/16" - JIC	7/16" - JIC	18.5	15.2	9	14	14
SSCGB-08-08 #	1/2" - JIC	1/2" - JIC	19.6	16	9.5	14	16
SSCGB-09-09	9/16" - JIC	9/16" - JIC	21.1	18	10.5	14	19
SSCGB-12-12	3/4" - JIC	3/4" - JIC	25	20	11	19	24
SSCGB-14-14 #	7/8" - JIC	7/8" - JIC	28.2	22.2	12.5	22	25
SSCGB-17-17	1.1/16" - JIC	1.1/16" - JIC	32.5	26	13.9	27	32
SSCGB-19-19 #	1.3/16" - JIC	1.3/16" - JIC	36.8	27	14.7	33	35
SSCGB-21-21	1.5/16" - JIC	1.5/16" - JIC	37.5	29.3	15.5	33	41
SSCGB-26-26 #	1.5/8" - JIC	1.5/8" - JIC	40.4	35.9	15.9	41	50
SSCGB-30-30 #	1.7/8" - JIC	1.7/8" - JIC	45.2	38	18.6	48	57
SSCGB-40-40 #	2.1/2" - JIC	2.1/2" - JIC	56.4	51.4	23.8	63	73

NON-STOCKED ITEM, AVAILABLE ON REQUEST

90° ELBOW CONNECTORS VISUAL INDEX

SSCFA
BSPP MALE ADJUSTABLE x JIC MALE
Page 38

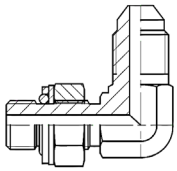

SSCVJ
BSPT MALE x BSPT MALE
Page 39

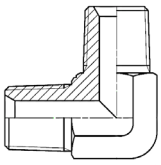

SSCLJ
BSPT MALE x BSPT FEMALE
Page 40

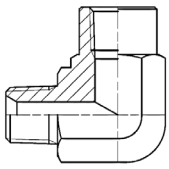

SSCVD
BSPT MALE x BSPP FEMALE SWIVEL
Page 41

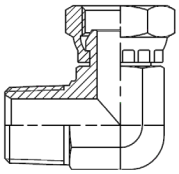

SSCVA
BSPT MALE x JIC MALE
Page 42

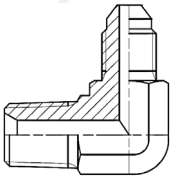

SSCLJN
NPT MALE x NPT FEMALE
Page 43

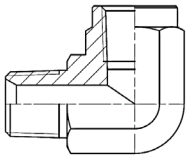

SSCLPN
NPT FEMALE x NPT FEMALE
Page 44

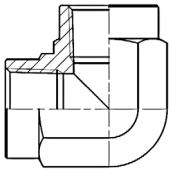

SSCVAN
NPT MALE x JIC MALE
Page 45

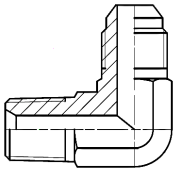

SSCAA
JIC MALE x JIC MALE
Page 46

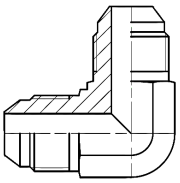

SSCAB
JIC MALE x JIC FEMALE SWIVEL
Page 47

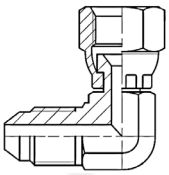

SSCEA
UNO MALE ADJUSTABLE x JIC MALE
Page 48

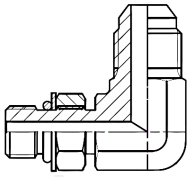

90° ELBOW CONNECTORS
SSCFA
BSPP MALE ADJUSTABLE x JIC MALE

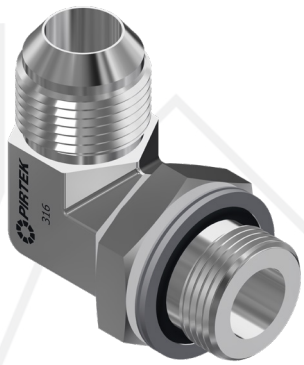

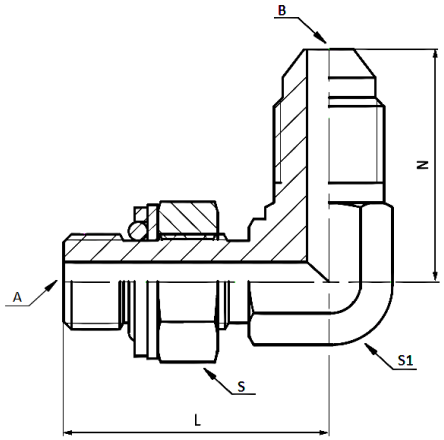

- AISI 316L (1.4404) grade material
- Thread: BSPP 30° chamfer seat x UNF/UN 37° cone seat
- Standards: ISO 228-1, AS 1722.2 / SAE J514, ISO 8434-2
- Sealing: Lock nut with retaining ring & FKM (Viton®) O-ring. ISO 1179-3, ISO 3601

Product Code	A	B	L mm	N mm	S1 mm	S mm
SSCFA-02-07	1/8" - BSPP	7/16" - JIC	26.5	23.5	11	14
SSCFA-02-08 #	1/8" - BSPP	1/2" - JIC	27.7	24.1	14	14
SSCFA-04-07	1/4" - BSPP	7/16" - JIC	31.8	22.6	14	19
SSCFA-04-09	1/4" - BSPP	9/16" - JIC	31.8	28.5	14	19
SSCFA-04-12 #	1/4" - BSPP	3/4" - JIC	36.8	31.8	19	27
SSCFA-06-08 #	3/8" - BSPP	1/2" - JIC	31.8	26.6	14	19
SSCFA-06-12	3/8" - BSPP	3/4" - JIC	36.8	32.5	19	22
SSCFA-06-14 #	3/8" - BSPP	7/8" - JIC	37.1	36.8	22	36
SSCFA-08-08 #	1/2" - BSPP	1/2" - JIC	36.8	28.5	19	22
SSCFA-08-09 #	1/2" - BSPP	9/16" - JIC	36.8	29	19	22
SSCFA-08-12	1/2" - BSPP	3/4" - JIC	43.2	33.8	22	27
SSCFA-08-14	1/2" - BSPP	7/8" - JIC	43.2	37.5	22	27
SSCFA-08-17 #	1/2" - BSPP	1.1/16" - JIC	49.3	42.2	27	36
SSCFA-12-14 #	3/4" - BSPP	7/8" - JIC	49.3	39.2	27	36
SSCFA-12-17	3/4" - BSPP	1.1/16" - JIC	49.3	42	27	32
SSCFA-12-21 #	3/4" - BSPP	1.5/16" - JIC	52.1	46	33	41
SSCFA-16-17 #	1" - BSPP	1.1/16" - JIC	52.1	44.7	33	41
SSCFA-16-21	1" - BSPP	1.5/16" - JIC	53.6	46	33	41
SSCFA-16-26 #	1" - BSPP	1.5/8" - JIC	57.2	52.3	41	50
SSCFA-16-30 #	1" - BSPP	1.7/8" - JIC	60.7	59.2	48	50
SSCFA-20-26 #	1.1/4" - BSPP	1.5/8" - JIC	57.2	52.3	41	41
SSCFA-20-30 #	1.1/4" - BSPP	1.7/8" - JIC	60.7	59.2	48	50

NON-STOCKED ITEM, AVAILABLE ON REQUEST

90° ELBOW CONNECTORS SSCVJ

BSPT MALE x BSPT MALE

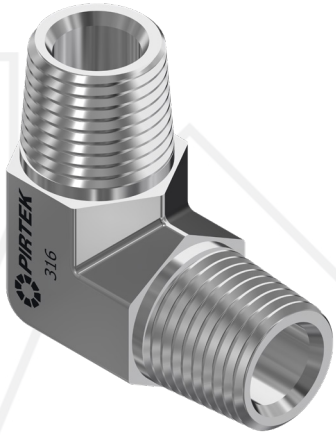

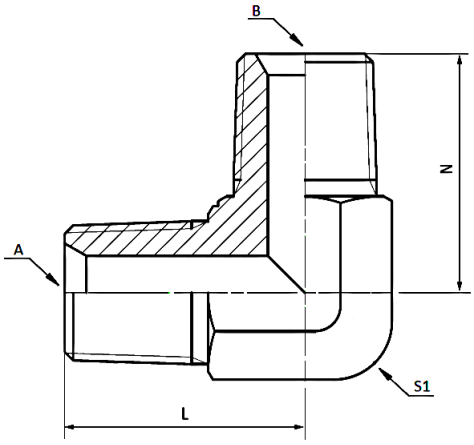

- AISI 316L (1.4404) grade material
- Thread: BSPT 30° chamfer seat
- Standards: ISO 7-1

Product Code	A	B	L mm	N mm	S1 mm
SSCVJ-02-02 #	1/8" - BSPT	1/8" - BSPT	21	21	11
SSCVJ-02-04 #	1/8" - BSPT	1/4" - BSPT	23.5	25.5	14
SSCVJ-04-04	1/4" - BSPT	1/4" - BSPT	25.5	25.5	14
SSCVJ-04-06 #	1/4" - BSPT	3/8" - BSPT	26.5	28.5	16
SSCVJ-06-06	3/8" - BSPT	3/8" - BSPT	29	29	19
SSCVJ-06-08 #	3/8" - BSPT	1/2" - BSPT	32.5	36	22
SSCVJ-08-08	1/2" - BSPT	1/2" - BSPT	36	36	22
SSCVJ-08-12 #	1/2" - BSPT	3/4" - BSPT	39.5	43.5	27
SSCVJ-12-12	3/4" - BSPT	3/4" - BSPT	40.4	40.4	27
SSCVJ-12-16 #	3/4" - BSPT	1" - BSPT	48	50	33
SSCVJ-16-16	1" - BSPT	1" - BSPT	50	50	33
SSCVJ-16-20 #	1" - BSPT	1.1/4" - BSPT	56.5	57.5	41
SSCVJ-20-20 #	1.1/4" - BSPT	1.1/4" - BSPT	57.5	57.5	41
SSCVJ-24-24 #	1.1/2" - BSPT	1.1/2" - BSPT	62.5	62.5	48
SSCVJ-32-32 #	2" - BSPT	2" - BSPT	68	75	63

NON-STOCKED ITEM, AVAILABLE ON REQUEST

90° ELBOW CONNECTORS SSCLJ

BSPT MALE x BSPT FEMALE

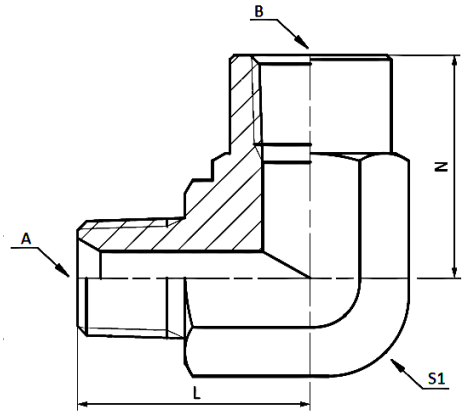

- AISI 316L (1.4404) grade material
- Thread: BSPT 30° chamfer seat
- Standards: ISO 7-1

Product Code	A	B	L mm	N mm	S1 mm
SSCLJ-02-02 #	1/8" - BSPT	1/8" - BSPT	24.5	23	16
SSCLJ-04-04	1/4" - BSPT	1/4" - BSPT	26	25	19
SSCLJ-06-06 #	3/8" - BSPT	3/8" - BSPT	33.5	25	24
SSCLJ-08-08 #	1/2" - BSPT	1/2" - BSPT	40.8	31.5	30
SSCLJ-12-12 #	3/4" - BSPT	3/4" - BSPT	47.5	37	33
SSCLJ-16-16 #	1" - BSPT	1" - BSPT	56.5	43	41
SSCLJ-20-20 #	1.1/4" - BSPT	1.1/4" - BSPT	61	50	48
SSCLJ-24-24 #	1.1/2" - BSPT	1.1/2" - BSPT	75	55	63

NON-STOCKED ITEM, AVAILABLE ON REQUEST

90° ELBOW CONNECTORS SSCVD

BSPT MALE x BSPP FEMALE SWIVEL

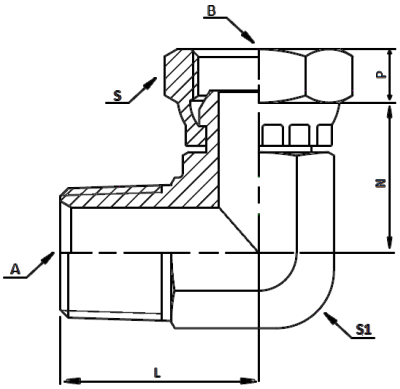

- AISI 316L (1.4404) grade material
- Thread: BSPT 30º chamfer seat x BSPP 30º cone seat
- Standards: ISO 7-1 / ISO 228-1, AS 1722.2

Product Code	A	B	L mm	N mm	P mm	S1 mm	S mm
SSCVD-02-02 #	1/8" - BSPT	1/8" - BSPP	21	19.5	4.3	11	14
SSCVD-04-04 #	1/4" - BSPT	1/4" - BSPP	25.5	22	5.2	14	19
SSCVD-06-06 #	3/8" - BSPT	3/8" - BSPP	29	24.8	6	19	22
SSCVD-06-08 #	3/8" - BSPT	1/2" - BSPP	29	27.5	6.5	19	27
SSCVD-08-06 #	1/2" - BSPT	3/8" - BSPP	37.3	27.5	6	22	22
SSCVD-08-08 #	1/2" - BSPT	1/2" - BSPP	37.3	31	6.5	22	27
SSCVD-08-12 #	1/2" - BSPT	3/4" - BSPP	37.3	31.5	8.7	22	32
SSCVD-12-08 #	3/4" - BSPT	1/2" - BSPP	41.5	31.5	6.5	27	27
SSCVD-12-12 #	3/4" - BSPT	3/4" - BSPP	41.5	35.6	8.7	27	32
SSCVD-16-16	1" - BSPT	1" - BSPP	50	41	10.5	33.3	41
SSCVD-20-20 #	1.1/4" - BSPT	1.1/4" - BSPP	57	48.5	10.1	41	50
SSCVD-24-24 #	1.1/2" - BSPT	1.1/2" - BSPP	62.5	52.5	12.5	48	55
SSCVD-32-32 #	2" - BSPT	2" - BSPP	75	64	16.1	63	70

NON-STOCKED ITEM, AVAILABLE ON REQUEST

90° ELBOW CONNECTORS SSCVA

BSPT MALE x JIC MALE

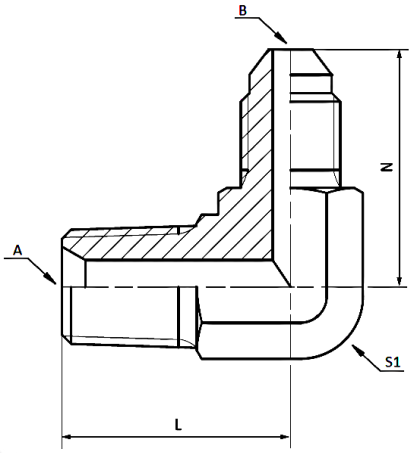

- AISI 316L (1.4404) grade material
- Thread: BSPT 30° chamfer seat x UNF/UN 37° cone seat
- Standards: ISO 7-1 / SAE J514, ISO 8434-2

Product Code	A	B	L mm	N mm	S1 mm
SSCVA-02-07	1/8" - BSPT	7/16" - JIC	19.8	22.6	11
SSCVA-02-08 #	1/8" - BSPT	1/2" - JIC	19.8	24.1	14
SSCVA-02-09	1/8" - BSPT	9/16" - JIC	21	27	14
SSCVA-04-07	1/4" - BSPT	7/16" - JIC	25.5	26.6	14
SSCVA-04-08 #	1/4" - BSPT	1/2" - JIC	27.7	26.6	14
SSCVA-04-09	1/4" - BSPT	9/16" - JIC	25.5	27	14
SSCVA-04-12 #	1/4" - BSPT	3/4" - JIC	31	31.8	19
SSCVA-06-09	3/8" - BSPT	9/16" - JIC	31	29	19
SSCVA-06-12	3/8" - BSPT	3/4" - JIC	31	34.8	19
SSCVA-06-14 #	3/8" - BSPT	7/8" - JIC	32.5	36.5	22
SSCVA-08-09 #	1/2" - BSPT	9/16" - JIC	37.3	31	22
SSCVA-08-12	1/2" - BSPT	3/4" - JIC	36	34.8	22
SSCVA-08-14 #	1/2" - BSPT	7/8" - JIC	37.3	36.8	22
SSCVA-08-17 #	1/2" - BSPT	1.1/16" - JIC	40.4	42.2	27
SSCVA-12-14 #	3/4" - BSPT	7/8" - JIC	40.4	39.2	27
SSCVA-12-17	3/4" - BSPT	1.1/16" - JIC	40.4	42.2	27
SSCVA-12-21 #	3/4" - BSPT	1.5/16" - JIC	45.2	46	33
SSCVA-16-21	1" - BSPT	1.5/16" - JIC	50	46	33
SSCVA-16-26 #	1" - BSPT	1.5/8" - JIC	59.7	52.3	41
SSCVA-20-26 #	1.1/4" - BSPT	1.5/8" - JIC	60.5	52.3	41
SSCVA-24-30 #	1.1/2" - BSPT	1.7/8" - JIC	67.1	59.2	48

NON-STOCKED ITEM, AVAILABLE ON REQUEST

90° ELBOW CONNECTORS SSCLJN

NPT MALE x NPT FEMALE

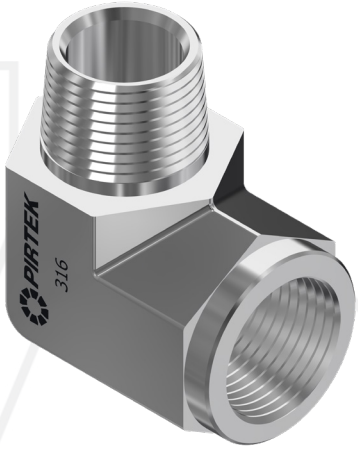

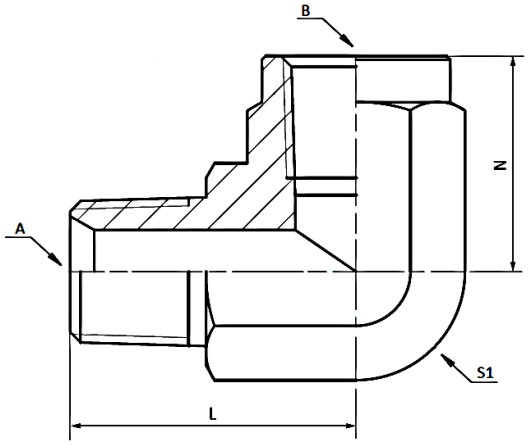

- AISI 316L (1.4404) grade material
- Thread: NPT 30° chamfer seat
- Standards: ANSI/ASME B1.20.1

Product Code	A	B	L mm	N mm	S1 mm
SSCLJN-02-02 #	1/8" - NPT	1/8" - NPT	19.8	17.8	14
SSCLJN-04-04 #	1/4" - NPT	1/4" - NPT	28	22.4	19
SSCLJN-04-06 #	1/4" - NPT	3/8" - NPT	31	25	22
SSCLJN-06-06 #	3/8" - NPT	3/8" - NPT	33.5	25	22
SSCLJN-08-08	1/2" - NPT	1/2" - NPT	41	31	27
SSCLJN-12-08 #	3/4" - NPT	1/2" - NPT	45	31.2	27
SSCLJN-12-12	3/4" - NPT	3/4" - NPT	45	34.5	33.3
SSCLJN-16-16	1" - NPT	1" - NPT	54.5	41.5	41
SSCLJN-20-20 #	1.1/4" - NPT	1.1/4" - NPT	63	43.2	48
SSCLJN-24-24 #	1.1/2" - NPT	1.1/2" - NPT	71.5	52.8	63
SSCLJN-32-32 #	2" - NPT	2" - NPT	73.5	62	70

NON-STOCKED ITEM, AVAILABLE ON REQUEST

90° ELBOW CONNECTORS SSCLPN

NPT FEMALE x NPT FEMALE

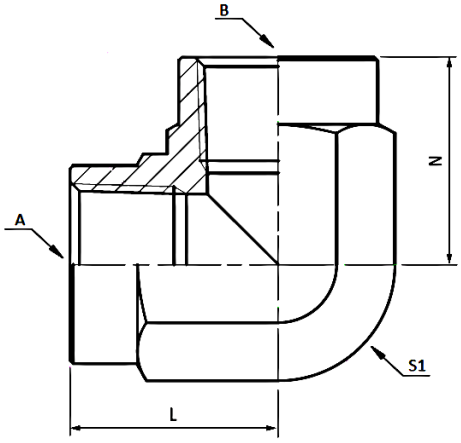

- AISI 316L (1.4404) grade material
- Thread: NPT
- Standards: ANSI/ASME B1.20.1

Product Code	A	B	L mm	N mm	S1 mm
SSCLPN-02-02 #	1/8" - NPT	1/8" - NPT	20	20	16
SSCLPN-04-04 #	1/4" - NPT	1/4" - NPT	22.5	22.5	19
SSCLPN-06-06 #	3/8" - NPT	3/8" - NPT	26	26	24
SSCLPN-08-08 #	1/2" - NPT	1/2" - NPT	31	31	27
SSCLPN-12-12	3/4" - NPT	3/4" - NPT	34	34	33.3
SSCLPN-16-16 #	1" - NPT	1" - NPT	42	42	41
SSCLPN-20-20 #	1.1/4" - NPT	1.1/4" - NPT	48	48	50
SSCLPN-24-24 #	1.1/2" - NPT	1.1/2" - NPT	53	53	60
SSCLPN-32-32 #	2" - NPT	2" - NPT	62	62	70

NON-STOCKED ITEM, AVAILABLE ON REQUEST

90° ELBOW CONNECTORS SSCVAN

NPT MALE x JIC MALE

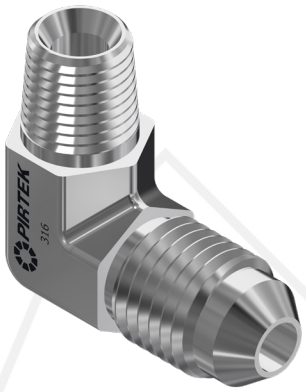

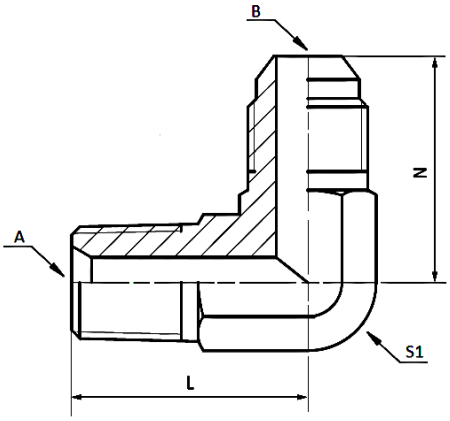

- AISI 316L (1.4404) grade material
- Thread: NPT 30° chamfer seat x UNF/UN 37° cone seat
- Standards: ANSI/ASME B1.20.1 / SAE J514, ISO 8434-2

Product Code	A	B	L mm	N mm	S1 mm
SSCVAN-02-07	1/8" - NPT	7/16" - JIC	20	22.5	11
SSCVAN-04-07	1/4" - NPT	7/16" - JIC	28	26.5	14
SSCVAN-04-08 #	1/4" - NPT	1/2" - JIC	27.7	24.5	14
SSCVAN-04-09	1/4" - NPT	9/16" - JIC	28	27	14
SSCVAN-04-12 #	1/4" - NPT	3/4" - JIC	31	32	19
SSCVAN-06-07 #	3/8" - NPT	7/16" - JIC	31	29	16
SSCVAN-06-08 #	3/8" - NPT	1/2" - JIC	31	29	16
SSCVAN-06-09 #	3/8" - NPT	9/16 - JIC	31	29	16
SSCVAN-06-12 #	3/8" - NPT	3/4" - JIC	31	32	19
SSCVAN-06-14 #	3/8" - NPT	7/8" - JIC	32.5	37	22
SSCVAN-08-09 #	1/2" - NPT	9/16 - JIC	37.3	31	22
SSCVAN-08-12	1/2" - NPT	3/4" - JIC	37.5	34.8	22
SSCVAN-08-14 #	1/2" - NPT	7/8" - JIC	37.3	37	22
SSCVAN-08-17 #	1/2" - NPT	1.1/16" - JIC	40.4	42.5	27
SSCVAN-12-12	3/4" - NPT	3/4" - JIC	40.5	36	27
SSCVAN-12-14 #	3/4" - NPT	7/8" - JIC	40.4	39.2	27
SSCVAN-12-17	3/4" - NPT	1.1/16" - JIC	40.5	42	27
SSCVAN-12-19 #	3/4" - NPT	1.3/16" - JIC	43	46	30
SSCVAN-12-21 #	3/4" - NPT	1.5/16" - JIC	45.2	46	33
SSCVAN-16-14 #	1" - NPT	7/8" - JIC	50	44.5	33
SSCVAN-16-17	1" - NPT	1.1/16" - JIC	50	45	33.3
SSCVAN-16-19 #	1" - NPT	1.3/16" - JIC	50	48.7	33
SSCVAN-16-21	1" - NPT	1.5/16" - JIC	50	46	33.3
SSCVAN-16-26 #	1" - NPT	1.5/8" - JIC	59.5	53	41
SSCVAN-20-17 #	1.1/4" - NPT	1.1/16" - JIC	54.5	52.5	41
SSCVAN-20-21 #	1.1/4" - NPT	1.5/16" - JIC	60.5	54	41
SSCVAN-20-26 #	1.1/4" - NPT	1.5/8" - JIC	60.5	52.3	41
SSCVAN-20-30 #	1.1/4" - NPT	1.7/8" - JIC	57	59	48
SSCVAN-24-21 #	1.1/2" - NPT	1.5/16" - JIC	59.5	59.4	48
SSCVAN-24-26 #	1.1/2" - NPT	1.5/8" - JIC	67	56	48
SSCVAN-24-30 #	1.1/2" - NPT	1.7/8" - JIC	63	62.5	48
SSCVAN-24-40 #	1.1/2" - NPT	2.1/2" - JIC	70	77.7	63
SSCVAN-32-40 #	2" - NPT	2.1/2" - JIC	76.2	77.7	63

NON-STOCKED ITEM, AVAILABLE ON REQUEST

90° ELBOW CONNECTORS SSCAA

JIC MALE x JIC MALE

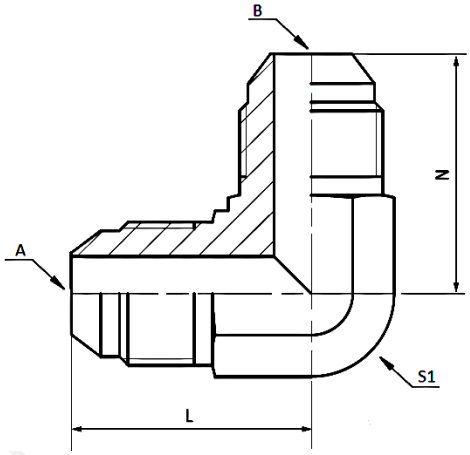

- AISI 316L (1.4404) grade material
- Thread: UNF/UN 37° cone seat
- Standards: SAE J514, ISO 8434-2

Product Code	A	B	L mm	N mm	S1 mm
SSCAA-05-05 #	5/16" - JIC	5/16" - JIC	19.6	19.6	11
SSCAA-06-06 #	3/8" - JIC	3/8" - JIC	21.1	21.1	11
SSCAA-07-07 #	7/16" - JIC	7/16" - JIC	22.6	22.6	11
SSCAA-08-07 #	1/2" - JIC	7/16" - JIC	24.1	24.1	14
SSCAA-08-08 #	1/2" - JIC	1/2" - JIC	24.1	24.1	14
SSCAA-09-07 #	9/16" - JIC	7/16" - JIC	26.9	26.7	14
SSCAA-09-09 #	9/16" - JIC	9/16" - JIC	26.9	26.9	14
SSCAA-12-09 #	3/4" - JIC	9/16" - JIC	31.8	29	19
SSCAA-12-12	3/4" - JIC	3/4" - JIC	31.8	31.8	19
SSCAA-14-12 #	7/8" - JIC	3/4" - JIC	36.8	33.8	22
SSCAA-14-14 #	7/8" - JIC	7/8" - JIC	36.8	36.8	22
SSCAA-17-12 #	1.1/16" - JIC	3/4" - JIC	42.2	36.1	27
SSCAA-17-14 #	1.1/16" - JIC	7/8" - JIC	42.2	39.1	27
SSCAA-17-17	1.1/16" - JIC	1.1/16" - JIC	42.2	42.2	27
SSCAA-19-19 #	1.3/16" - JIC	1.3/16" - JIC	45.7	45.7	33
SSCAA-21-17 #	1.5/16" - JIC	1.1/16" - JIC	46	44.7	33
SSCAA-21-21 #	1.5/16" - JIC	1.5/16" - JIC	46	46	33
SSCAA-26-26 #	1.5/8" - JIC	1.5/8" - JIC	52.3	52.3	41
SSCAA-30-30 #	1.7/8" - JIC	1.7/8" - JIC	59.2	59.2	48
SSCAA-40-40 #	2.1/2" - JIC	2.1/2" - JIC	77.7	77.7	63

NON-STOCKED ITEM, AVAILABLE ON REQUEST

90° ELBOW CONNECTORS SSCAB

JIC MALE x JIC FEMALE SWIVEL

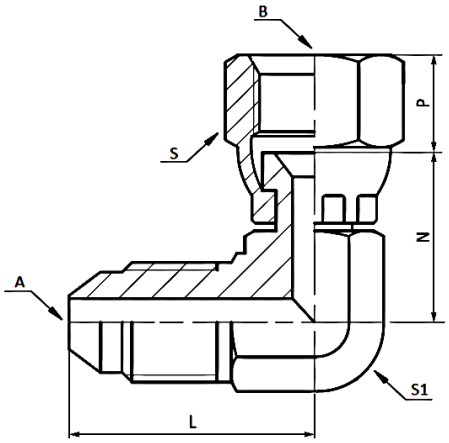

- AISI 316L (1.4404) grade material
- Thread: UNF/UN 37° cone seat - chamfer seat
- Standards: SAE J514, ISO 8434-2

Product Code	A	B	L mm	N mm	P mm	S1 mm	S mm
SSCAB-07-07	7/16" - JIC	7/16" - JIC	22.5	15.6	9	11	14
SSCAB-08-08 #	1/2" - JIC	1/2" - JIC	24.1	17.4	9.5	14	17
SSCAB-09-09	9/16" - JIC	9/16" - JIC	26.9	20	9.5	14	19
SSCAB-09-12 #	9/16" - JIC	3/4" - JIC	28.5	24.4	10.7	16	24
SSCAB-12-09 #	3/4" - JIC	9/16" - JIC	32	22.3	9.5	19	19
SSCAB-12-12	3/4" - JIC	3/4" - JIC	32	25	11	19	24
SSCAB-12-14 #	3/4" - JIC	7/8" - JIC	32	28.8	12.5	19	27
SSCAB-14-14	7/8" - JIC	7/8" - JIC	36.8	28.5	13	22	27
SSCAB-14-12 #	7/8" - JIC	3/4" - JIC	36.8	28.6	10.7	22	24
SSCAB-14-17 #	7/8" - JIC	1.1/16" - JIC	39.5	30.8	14.3	24	32
SSCAB-17-14 #	1.1/16" - JIC	7/8" - JIC	42.2	30.4	12.5	27	27
SSCAB-17-17	1.1/16" - JIC	1.1/16" - JIC	42.2	30.2	13.9	27	32
SSCAB-17-21 #	1.1/16" - JIC	1.5/16" - JIC	46	36.2	15.1	30	41
SSCAB-19-19 #	1.3/16" - JIC	1.3/16" - JIC	45.7	35.1	14.7	30	36
SSCAB-21-21	1.5/16" - JIC	1.5/16" - JIC	46	34.8	15.5	33	41
SSCAB-21-26 #	1.5/16" - JIC	1.5/8" - JIC	54	43	15.9	41	50
SSCAB-26-21 #	1.5/8" - JIC	1.5/16" - JIC	52.3	43.8	15.1	41	41
SSCAB-26-26	1.5/8" - JIC	1.5/8" - JIC	52.5	42.8	15.9	41	50
SSCAB-26-30 #	1.5/8" - JIC	1.7/8" - JIC	59.5	47	18.6	48	55
SSCAB-30-26 #	1.7/8" - JIC	1.5/8" - JIC	62.5	49.7	15.9	48	50
SSCAB-30-30	1.7/8" - JIC	1.7/8" - JIC	59.2	47.2	19	48	55
SSCAB-40-40 #	2.1/2" - JIC	2.1/2" - JIC	78	63.3	23.8	63	75

NON-STOCKED ITEM, AVAILABLE ON REQUEST

90° ELBOW CONNECTORS
SSCEA
UNO MALE ADJUSTABLE x JIC MALE

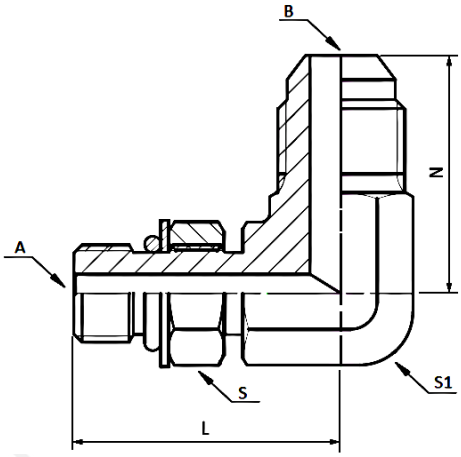

- AISI 316L (1.4404) grade material
- Thread: UNF/UN x UNF/UN 37° cone seat
- Standards: SAE J1926, ISO 11926 / SAE J514, ISO 8434-2
- Sealing: Lock nut with retaining ring & FKM (Viton®) O-ring. SAE J515

Product Code	A	B	L mm	N mm	S1 mm	S mm
SSCEA-07-07	7/16" - UNO	7/16" - JIC	26.2	22.6	11	14
SSCEA-07-08 #	7/16" - UNO	1/2" - JIC	28.7	24.1	14	14
SSCEA-07-09	7/16" - UNO	9/16" - JIC	30.8	27	14	14
SSCEA-07-12 #	7/16" - UNO	3/4" - JIC	33	32	19	14
SSCEA-08-07 #	1/2" - UNO	7/16" - JIC	28.7	24.1	14	17
SSCEA-08-08 #	1/2" - UNO	1/2" - JIC	28.7	24.1	14	17
SSCEA-08-09 #	1/2" - UNO	9/16" - JIC	31.2	26.9	14	17
SSCEA-09-07 #	9/16" - UNO	7/16" - JIC	29.3	24.1	14	17
SSCEA-09-08 #	9/16" - UNO	1/2" - JIC	31.8	24.1	14	17
SSCEA-09-09	9/16" - UNO	9/16" - JIC	31.8	26.9	14	17
SSCEA-09-12 #	9/16" - UNO	3/4" - JIC	33.5	32	19	17
SSCEA-12-09	3/4" - UNO	9/16" - JIC	36.8	29	19	22
SSCEA-12-12	3/4" - UNO	3/4" - JIC	36.8	30.7	19	22
SSCEA-12-14 #	3/4" - UNO	7/8" - JIC	40	38	22	22
SSCEA-12-17 #	3/4" - UNO	1.1/16" - JIC	44	42.2	27	22
SSCEA-14-12 #	7/8" - UNO	3/4" - JIC	43.5	34	22	27
SSCEA-14-14 #	7/8" - UNO	7/8" - JIC	43.2	36.8	22	27
SSCEA-14-17 #	7/8" - UNO	1.1/16" - JIC	47	42.2	27	27
SSCEA-17-12 #	1.1/16" - UNO	3/4" - JIC	49.5	36.5	27	32
SSCEA-17-14 #	1.1/16" - UNO	7/8" - JIC	51	41	27	32

NON-STOCKED ITEM, AVAILABLE ON REQUEST

TEE CONNECTORS VISUAL INDEX

SSEPF

BSPT FEMALE x BSPT FEMALE x BSPT FEMALE

Page 50

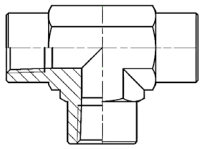

SSEPK

NPT FEMALE x NPT FEMALE x NPT FEMALE

Page 51

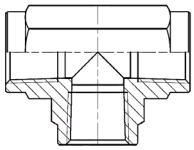

SSCBB

JIC MALE x JIC MALE x JIC FEMALE

Page 52

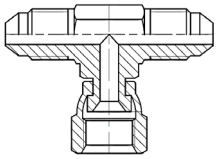

SSCMA

JIC MALE x JIC FEMALE x JIC MALE

Page 53

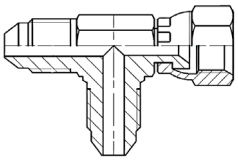

TEE CONNECTORS
SSEPF
BSPT FEMALE x BSPT FEMALE x BSPT FEMALE

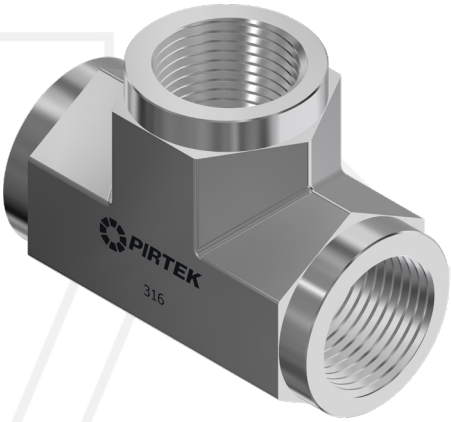

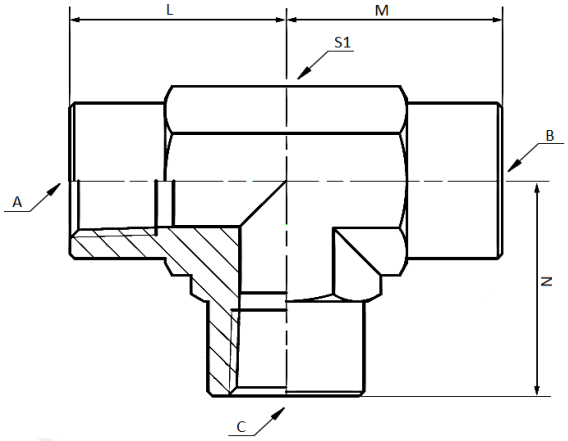

- AISI 316L (1.4404) grade material
- Thread: BSPT
- Standards: ISO 7-1

Product Code	A	B	C	L mm	M mm	N mm	S1 mm
SSEPF-02-02-02 #	1/8" - BSPT	1/8" - BSPT	1/8" - BSPT	20	20	20	16
SSEPF-04-04-04	1/4" - BSPT	1/4" - BSPT	1/4" - BSPT	25	25	25	19
SSEPF-06-06-06 #	3/8" - BSPT	3/8" - BSPT	3/8" - BSPT	26	26	26	24
SSEPF-08-08-08	1/2" - BSPT	1/2" - BSPT	1/2" - BSPT	31.5	31.5	31.5	27
SSEPF-12-12-12	3/4" - BSPT	3/4" - BSPT	3/4" - BSPT	34.5	34.5	34.5	33.3
SSEPF-16-16-16	1" - BSPT	1" - BSPT	1" - BSPT	42	42	42	41
SSEPF-20-20-20 #	1.1/4" - BSPT	1.1/4" - BSPT	1.1/4" - BSPT	48	48	48	50
SSEPF-24-24-24 #	1.1/2" - BSPT	1.1/2" - BSPT	1.1/2" - BSPT	53	53	53	60
SSEPF-32-32-32 #	2" - BSPT	2" - BSPT	2" - BSPT	62	62	62	70

NON-STOCKED ITEM, AVAILABLE ON REQUEST

TEE CONNECTORS
SSEPK
NPT FEMALE x NPT FEMALE x NPT FEMALE

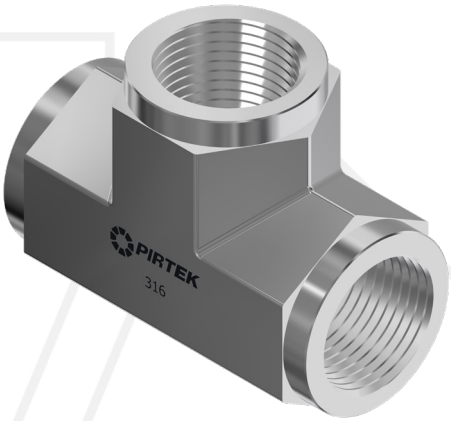

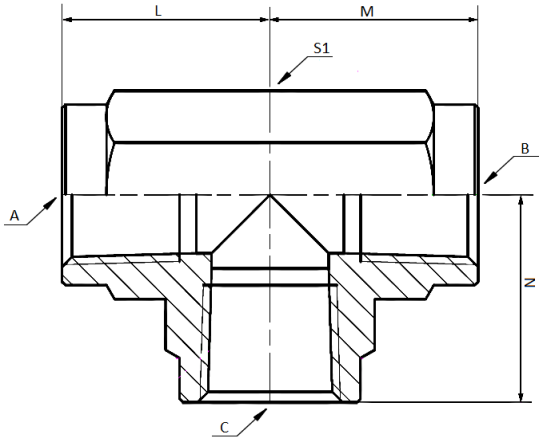

- AISI 316L (1.4404) grade material
- Thread: NPT
- Standards: ANSI/ASME B1.20.1

Product Code	A	B	C	L mm	M mm	N mm	S1 mm
SSEPK-02-02-02 #	1/8" - NPT	1/8" - NPT	1/8" - NPT	20	20	20	17
SSEPK-04-04-04 #	1/4" - NPT	1/4" - NPT	1/4" - NPT	22.5	22.5	22.5	19
SSEPK-06-06-06 #	3/8" - NPT	3/8" - NPT	3/8" - NPT	26	26	26	22
SSEPK-08-08-08	1/2" - NPT	1/2" - NPT	1/2" - NPT	31	31	31	27
SSEPK-12-12-12	3/4" - NPT	3/4" - NPT	3/4" - NPT	34	34	34	33.3
SSEPK-16-16-16	1" - NPT	1" - NPT	1" - NPT	42	42	42	41
SSEPK-20-20-20 #	1.1/4" - NPT	1.1/4" - NPT	1.1/4" - NPT	48	48	48	50
SSEPK-24-24-24 #	1.1/2" - NPT	1.1/2" - NPT	1.1/2" - NPT	53	53	53	60
SSEPK-32-32-32 #	2" - NPT	2" - NPT	2" - NPT	62	62	62	70

NON-STOCKED ITEM, AVAILABLE ON REQUEST

TEE CONNECTORS
SSCBB
JIC MALE x JIC MALE x JIC FEMALE

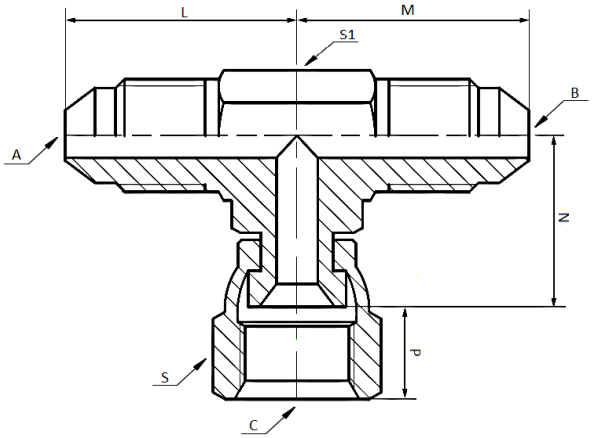

- AISI 316L (1.4404) grade material
- Thread: UNF/UN 37° cone seat x UNF/UN 37° chamfer seat
- Standards: SAE J514, ISO 8434-2

Product Code	A	B	C	L mm	M mm	N mm	P mm	S1 mm	S mm
SSCBB-07-07-07	7/16" - JIC	7/16" - JIC	7/16" - JIC	22.5	22.5	16.7	9	11	14
SSCBB-08-08-08 #	1/2" - JIC	1/2" - JIC	1/2" - JIC	24.1	24.1	17.4	9.5	14	17
SSCBB-09-09-09 #	9/16" - JIC	9/16" - JIC	9/16" - JIC	26.9	26.9	22.3	9.5	14	19
SSCBB-12-12-12	3/4" - JIC	3/4" - JIC	3/4" - JIC	31.8	31.8	24.4	11	19	24
SSCBB-14-14-14 #	7/8" - JIC	7/8" - JIC	7/8" - JIC	36.8	36.8	28.5	13	22	27
SSCBB-17-17-17 #	1.1/16" - JIC	1.1/16" - JIC	1.1/16" - JIC	42.2	42.2	30.2	13.9	27	32
SSCBB-19-19-19 #	1.3/16" - JIC	1.3/16" - JIC	1.3/16" - JIC	45.7	45.7	35	14.5	30	36
SSCBB-21-21-21 #	1.5/16" - JIC	1.5/16" - JIC	1.5/16" - JIC	46	46	34.8	14.5	33	41
SSCBB-26-26-26 #	1.5/8" - JIC	1.5/8" - JIC	1.5/8" - JIC	52.3	52.3	42.8	15.9	41	50
SSCBB-30-30-30 #	1.7/8" - JIC	1.7/8" - JIC	1.7/8" - JIC	62.5	62.5	47.2	19	48	55
SSCBB-40-40-40 #	2.1/2" - JIC	2.1/2" - JIC	2.1/2" - JIC	78	78	52	23.5	63	75

NON-STOCKED ITEM, AVAILABLE ON REQUEST

TEE CONNECTORS
SSCMA
JIC MALE x JIC FEMALE x JIC MALE

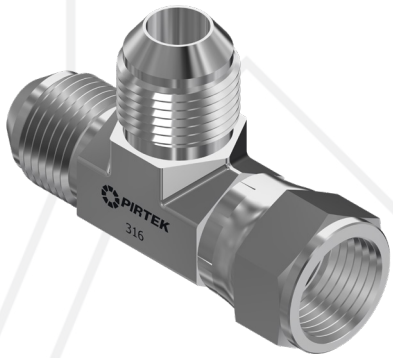

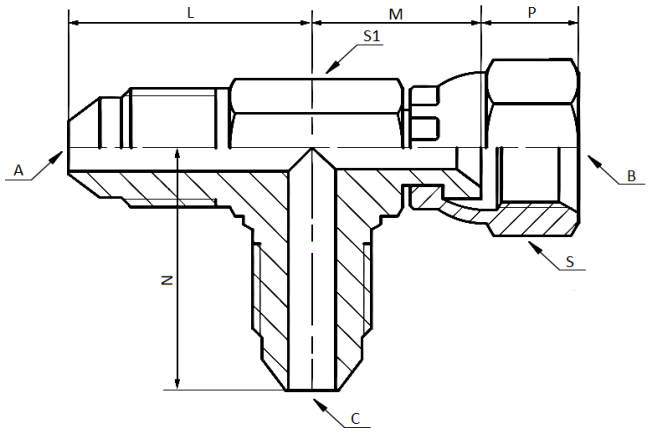

- AISI 316L (1.4404) grade material
- Thread: UNF/UN 37° cone seat x UNF/UN 37° chamfer seat
- Standards: SAE J514, ISO 8434-2

Product Code	A	B	C	L mm	M mm	N mm	P mm	S1 mm	S mm
SSCMA-07-07-07	7/16" - JIC	7/16" - JIC	7/16" - JIC	22.5	15.6	22.5	9	11	14
SSCMA-08-08-08 #	1/2" - JIC	1/2" - JIC	1/2" - JIC	24.1	17.4	24.1	9.5	14	17
SSCMA-09-09-09	9/16" - JIC	9/16" - JIC	9/16" - JIC	26.9	22.3	26.9	9.5	14	19
SSCMA-12-12-12	3/4" - JIC	3/4" - JIC	3/4" - JIC	31.8	24.4	31.8	11	19	24
SSCMA-14-14-14 #	7/8" - JIC	7/8" - JIC	7/8" - JIC	36.8	28.5	36.8	13	22	27
SSCMA-17-17-17	1.1/16" - JIC	1.1/16" - JIC	1.1/16" - JIC	42.5	30.2	42.5	13.9	27	32
SSCMA-19-19-19 #	1.3/16" - JIC	1.3/16" - JIC	1.3/16" - JIC	45.7	35	45.7	14.5	30	36
SSCMA-21-21-21 #	1.5/16" - JIC	1.5/16" - JIC	1.5/16" - JIC	46	34.8	46	14.5	33	41
SSCMA-26-26-26 #	1.5/8" - JIC	1.5/8" - JIC	1.5/8" - JIC	52.3	42.8	52.3	15.9	41	50
SSCMA-30-30-30 #	1.7/8" - JIC	1.7/8" - JIC	1.7/8" - JIC	62.5	47.2	62.5	19	48	55
SSCMA-40-40-40 #	2.1/2" - JIC	2.1/2" - JIC	2.1/2" - JIC	78	52	78	23.5	63	75

NON-STOCKED ITEM, AVAILABLE ON REQUEST

TUBE NUTS, ACCESSORIES & SEALS VISUAL INDEX

SSBAN
JIC TUBE NUT
Page 55

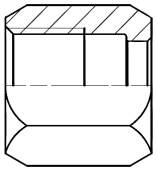

SSBAS
JIC TUBE SLEEVE
Page 56

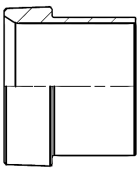

SSLNB
BSPP LOCKING NUT
Page 57

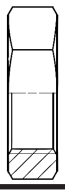

SSLNJ
JIC/UNO LOCKING NUT
Page 58

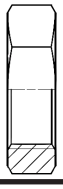

SSRRB
RETAINING RING FOR BSPP
Page 59

RROBV
O-RING FOR BSPP
Page 60

XV
O-RING FOR UNO
Page 61

SSZCV
BONDED/DOWTY WASHER
SELF CENTRING FOR BSPP
Page 62

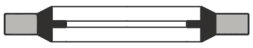

ED-V
ELASTOMER ED SEAL
Page 63

TUBE NUTS, ACCESSORIES & SEALS
SSBAN
JIC TUBE NUT

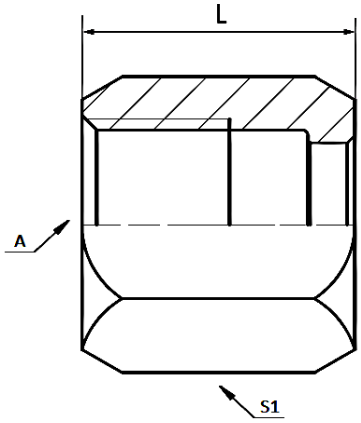

- AISI 316L (1.4404) grade material
- Thread: UNF/UN
- Standards: SAE J514, ISO 8434-2

Product Code	A	Suit Tube OD		L mm	S1 mm
SSBAN-05 #	5/16" - JIC	1/8"	3mm	14	3/8"
SSBAN-06 #	3/8" JIC	3/16"	5mm	15.5	7/16"
SSBAN-07	7/16" - JIC	1/4"	6mm	15.8	9/16"
SSBAN-08 #	1/2" - JIC	5/16"	8mm	17.3	5/8"
SSBAN-09	9/16" - JIC	3/8"	10mm	18.5	11/16"
SSBAN-12	3/4" - JIC	1/2"	12mm	21.6	7/8"
SSBAN-14	7/8" - JIC	5/8"	14mm 15mm 16mm	24.9	1"
SSBAN-17	1.1/16" - JIC	3/4"	18mm 19mm	26.2	1.1/4"
SSBAN-19 #	1.3/16" - JIC	7/8"	20mm 22mm	27.7	1.3/8"
SSBAN-21	1.5/16" - JIC	1"	25mm	28.7	1.1/2"
SSBAN-26	1.5/8" - JIC	1.1/4"	28 30 32	31.2	2"
SSBAN-30 #	1.7/8" - JIC	1.1/2"	35 38	36.1	2.1/4"
SSBAN-40 #	2.1/2" - JIC	2"	50	44.5	2.7/8"

NON-STOCKED ITEM, AVAILABLE ON REQUEST

TUBE NUTS, ACCESSORIES & SEALS
SSBAS
JIC TUBE SLEEVE

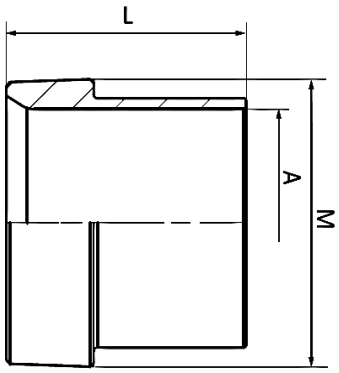

- AISI 316L (1.4404) grade material
- For Inch tube
- Standards: SAE J514, ISO 8434-2

Product Code	A	Suit Tube OD	M mm	L mm	Use with nut
SSBAS-02 #	3.3	1/8"	6.8	8.6	SSBAN-05
SSBAS-03 #	4.9	3/16"	8.4	8.6	SSBAN-06
SSBAS-04	6.4	1/4"	9.7	10.4	SSBAN-07
SSBAS-05 #	8.1	5/16"	11.3	11.2	SSBAN-08
SSBAS-06	9.6	3/8"	12.7	12.7	SSBAN-09
SSBAS-08	12.8	1/2"	17.3	14.2	SSBAN-12
SSBAS-10	16	5/8"	20.2	16.8	SSBAN-14
SSBAS-12	19.2	3/4"	24.6	17.3	SSBAN-17
SSBAS-14 #	22.4	7/8"	27.9	19.3	SSBAN-19
SSBAS-16	25.5	1"	31	19.8	SSBAN-21
SSBAS-20	32	1.1/4"	38.9	23.1	SSBAN-26
SSBAS-24 #	38.4	1.1/2"	45.3	28.4	SSBAN-30
SSBAS-32 #	51.2	2"	61.2	30.2	SSBAN-40

NON-STOCKED ITEM, AVAILABLE ON REQUEST

TUBE NUTS, ACCESSORIES & SEALS
SSLNB
BSPP LOCKING NUT

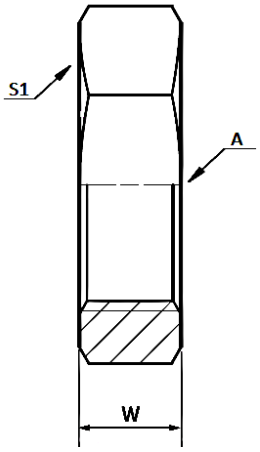

- AISI 316L (1.4404) grade material
- For BSPP bulkhead & adjustable elbow adaptors
- Standards: ISO 228-1, AS 1722.2

Product Code	A Suit BSPP thread	W mm	S1 mm
SSLNB-04 #	1/4"	7.1	19
SSLNB-06 #	3/8"	7	22
SSLNB-08 #	1/2"	8.6	27
SSLNB-10 #	5/8"	9.5	30
SSLNB-12 #	3/4"	10.5	32
SSLNB-16 #	1"	11.5	41
SSLNB-20 #	1.1/4"	11.5	50
SSLNB-24 #	1.1/2"	11.5	55

NON-STOCKED ITEM, AVAILABLE ON REQUEST

TUBE NUTS, ACCESSORIES & SEALS
SSLNJ
JIC/UNO LOCKING NUT

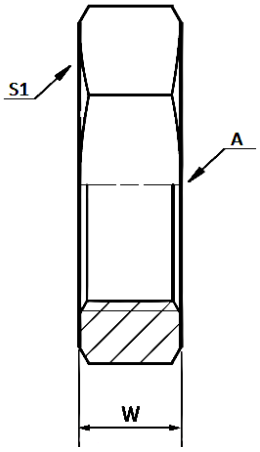

- AISI 316L (1.4404) grade material
- For JIC/UNO bulkhead & adjustable elbow adaptors
- Standards: SAE J514, ISO 8434-2 / SAE J1926, ISO 11926-1

Product Code	A Suit JIC/UNO thread	W mm	S1 mm
SSLNJ-07 #	7/16"	6.4	17.48
SSLNJ-08 #	1/2"	7.1	19.05
SSLNJ-09 #	9/16"	6.9	20.65
SSLNJ-12 #	3/4"	7.9	25.4
SSLNJ-14 #	7/8"	9.1	28.58
SSLNJ-17 #	1.1/16"	10.4	34.93
SSLNJ-19 #	1.3/16"	10.4	38.1
SSLNJ-21 #	1.5/16"	10.4	41.28
SSLNJ-26 #	1.5/8"	10.4	47.63
SSLNJ-30 #	1.7/8"	10.4	53.98
SSLNJ-40 #	2.1/2"	10.4	69.85

NON-STOCKED ITEM, AVAILABLE ON REQUEST

TUBE NUTS, ACCESSORIES & SEALS
SSRRB
RETAINING RING FOR BSPP

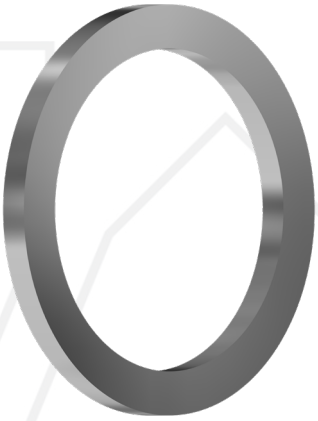

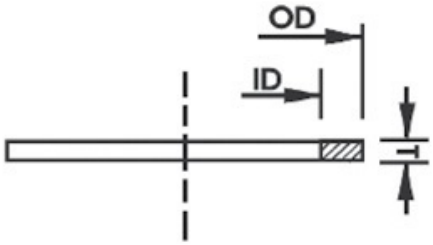

- AISI 316L (1.4404) grade material
- For BSPP adjustable elbow adaptors, use with RROBV BSPP O-ring
- Standards: ISO 1179-3

Product Code	Suit BSPP thread	ID mm	OD mm	T mm
SSRRB-02 #	1/8"	12.0	15.0	1.4
SSRRB-04 #	1/4"	15.8	19.5	1.9
SSRRB-06 #	3/8"	19.4	23.5	1.9
SSRRB-08 #	1/2"	23.0	28.5	1.9
SSRRB-12 #	3/4"	28.5	34.5	1.9
SSRRB-16 #	1"	36.4	43.5	2.6
SSRRB-20 #	1.1/4"	45.2	52.5	2.6

NON-STOCKED ITEM, AVAILABLE ON REQUEST

TUBE NUTS, ACCESSORIES & SEALS
RROBV
O-RING FOR BSPP

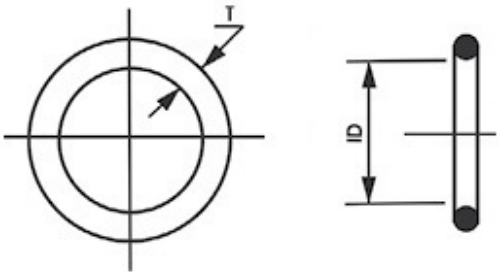

- FKM (Viton®) material, 90 duro
- For BSPP adjustable elbow adaptors, use with SSRRB BSPP retaining ring
- Standards: BS 1806, ISO 3601, SAE AS568
- Temperature range: -20°C up to +200°C

Product Code	Suit BSPP thread	ID mm	T mm	Reference Size
RROBV-02 #	1/8"	7.65	1.78	011
RROBV-04 #	1/4"	10.77	2.62	111
RROBV-06 #	3/8"	13.94	2.62	113
RROBV-08 #	1/2"	17.12	2.62	115
RROBV-12 #	3/4"	23.47	2.62	119
RROBV-16 #	1"	29.74	3.53	217
RROBV-20 #	1.1/4"	37.69	3.53	222

NON-STOCKED ITEM, AVAILABLE ON REQUEST

TUBE NUTS, ACCESSORIES & SEALS
XV
O-RING FOR UNO

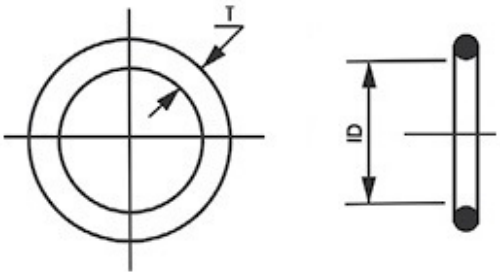

- FKM (Viton®) material, 90 duro
- For UNO adaptors
- Standards: SAE J515
- Temperature range: -20°C up to +200°C

Product Code	Suit UNO thread	ID mm	T mm	Reference Size
XV-07 #	7/16"	8.92	1.83	904
XV-08 #	1/2"	10.52	1.83	905
XV-09 #	9/16"	11.89	1.98	906
XV-10 #	5/8"	13.46	2.08	907
XV-12 #	3/4"	16.36	2.21	908
XV-14 #	7/8"	19.18	2.46	910
XV-17 #	1.1/16"	23.47	2.95	912
XV-19 #	1.3/16"	26.59	2.95	914
XV-21 #	1.5/16"	29.74	2.95	916
XV-26 #	1.5/8"	37.47	3	920
XV-30 #	1.7/8"	43.69	3	924
XV-40 #	2.1/2"	59.36	3	932

NON-STOCKED ITEM, AVAILABLE ON REQUEST

TUBE NUTS, ACCESSORIES & SEALS
SSZCV
BONDED/DOWTY WASHER SELF CENTRING FOR BSPP

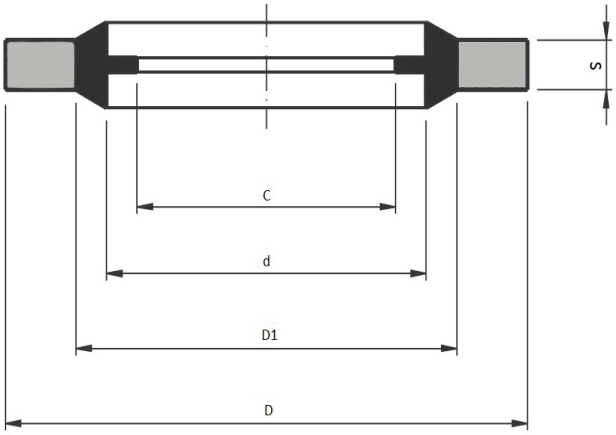

- Metal outer material AISI 316L (1.4404), Rubber material FKM (Viton®), 90 duro
- For BSPP adaptors
- Temperature range: -20°C up to +200°C

Product Code	Suit BSP thread	D mm	d1 mm	d mm	C mm	S mm	Reference Size
SSZCV-02 #	1/8"	15.88	11.84	10.37	8.3	2	820
SSZCV-04 #	1/4"	20.57	15.21	13.74	11.2	2	821
SSZCV-06 #	3/8"	23.80	18.75	17.28	14.76	2	823
SSZCV-08 #	1/2"	28.58	23.01	21.54	18.24	2.34	825
SSZCV-12 #	3/4"	34.93	28.53	27.05	23.83	2.34	827
SSZCV-16 #	1"	42.80	36.88	33.89	29.92	3.25	830
SSZCV-20 #	1.1/4"	52.38	45.93	42.93	38.45	3.25	832
SSZCV-24 #	1.1/2"	58.60	51.39	48.44	44.45	3.25	833
SSZCV-32 #	2"	73.03	63.63	60.58	56.26	3.25	836

NON-STOCKED ITEM, AVAILABLE ON REQUEST

TUBE NUTS, ACCESSORIES & SEALS
ED-V
ELASTOMER ED SEAL

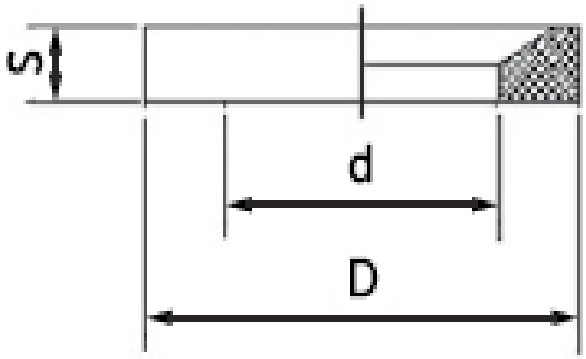

- FKM (Viton®) material, 80 duro
- For BSPP & Metric parallel adaptors
- Standards: DIN 3869
- Temperature range: -20°C up to +200°C

Product Code	Suit thread		D mm	d mm	S mm
ED-V-02/10M #	1/8"	M10x1	11.9	8.4	1
ED-V-04/14M	1/4"	M14x1.5	16.5	11.6	1.5
ED-V-06	3/8"	-	18.9	14.7	1.5
ED-V-08	1/2"	-	23.9	18.5	1.5
ED-V-12/26M/27M	3/4"	M26x1.5 M27x2	29.2	23.9	1.5
ED-V-16/33M	1"	M33x2	35.7	29.7	2
ED-V-20/42M	1.1/4"	M42x2	45.8	38.8	2
ED-V-24/48M	1.1/2"	M48x2	50.7	44.7	2
ED-V-32 #	2"	-	66.1	56.5	4

NON-STOCKED ITEM, AVAILABLE ON REQUEST